Pioneer sound.vision.soul

Service Manual

ORDER NO.
ARP3424

PLASMA TELEVISION

PDP-427XG
PDP-427XDA

THIS MANUAL IS APPLICABLE TO THE FOLLOWING MODEL(S) AND TYPE(S).

Model	Type	Power Requirement	Remarks
PDP-427XG	DLFR	AC 110 V to 240 V	
PDP-427XDA	YP	AC 240 V	

- **For SPECIFICATIONS and PANEL FACILITIES, refer to the operating instructions.**

PIONEER CORPORATION 4-1, Meguro 1-chome, Meguro-ku, Tokyo 153-8654, Japan
PIONEER ELECTRONICS (USA) INC. P.O. Box 1760, Long Beach, CA 90801-1760, U.S.A.
PIONEER EUROPE NV Haven 1087, Keetberglaan 1, 9120 Melsele, Belgium
PIONEER ELECTRONICS ASIACENTRE PTE. LTD. 253 Alexandra Road, #04-01, Singapore 159936
© PIONEER CORPORATION 2006

T – ZZR OCT. 2006 Printed in Japan

CONTENTS

1. QUICK REFERENCE UPON SERVICE VISIT 3
2. CONTRAST OF MISCELLANEOUS PARTS 5
3. BLOCK DIAGRAM 14
   3.1 SIGNAL BLOCK DIAGRAM 14
4. DIAGNOSIS 16
   4.1 TROUBLE SHOOTING 16
      4.1.1 FLOWCHART OF FAILURE ANALYSIS FOR THE VIDEO SYSTEM 16
      4.1.2 FLOWCHART OF FAILURE ANALYSIS FOR THE AUDIO SYSTEM 23
5. ADJUSTMENT 28
   5.1 ADJUSTMENT REQUIRED WHEN THE SET IS REPAIREO OR REPLACED 28
   5.2 ADJUSTMENT REQUIRED WHEN PART IS REPLACED 29
   5.3 ADJUSTMENT WHEN THE SERVICE PANEL ASSY IS REPLACED 30
6. RS-232C 32
   6.1 OUT LINE OF RS-232C COMMAND 32
      6.1.1 USING RS-232C COMMANDS 32
   6.2 OUT LINE OF EACH COMMAND 33
      6.2.1 QS6 33
7. GENERAL INFORMATION 34
   7.1 LED INFORMATION 34
   7.2 GENERAL INFORMATION (PDP-427XDA Only) 35
   7.3 SPECIFICATION 36
8. SERVICE FACTORY MODE 37
   8.1 FACTORY HIERARCHICAL TABLE 37
   8.2 FACTORY MENU 39
      8.2.1 INFORMATION 39
      8.2.4 INITIALIZE 43
9. SCHEMATIC DIAGRAM 44
   9.1 MAIN ASSY(1/9) [BOARD IF BLOCK] 44
   9.2 MAIN ASSY(2/9) [REG 0 BLOCK] 46
   9.3 MAIN ASSY(3/9) [ATUNER BLOCK] 48
   9.4 MAIN ASSY(4/9) [AV SW BLOCK] 50
   9.5 MAIN ASSY(5/9) [RGB SW BLOCK] 52
   9.6 MAIN ASSY(6/9) [VDEC BLOCK] 54
   9.7 MAIN ASSY(7/9) [IF UCOM BLOCK] 56
   9.8 MAIN ASSY(8/9) [MAIN UCOM BLOCK] 58
   9.9 MAIN ASSY(9/9) [DESEL BLOCK] 60
   9.10 TANSHI ASSY (1/2) 62
   9.11 TANSHI ASSY (2/2) 64
   9.12 DTV MB ASSY (1/16) 66
   9.13 DTV MB ASSY (2/16) 68
   9.14 DTV MB ASSY (3/16) 70
   9.15 DTV MB ASSY (4/16) 72
   9.16 DTV MB ASSY (5/16) 74
   9.17 DTV MB ASSY (6/16) 76
   9.18 DTV MB ASSY (7/16) 78
   9.19 DTV MB ASSY (8/16) 80
   9.20 DTV MB ASSY (9/16) 82
   9.21 DTV MB ASSY (10/16) 84
   9.22 DTV MB ASSY (11/16) 86
   9.23 DTV MB ASSY (12/16) 88
   9.24 DTV MB ASSY (13/16) 90
   9.25 DTV MB ASSY (14/16) 92
   9.26 DTV MB ASSY (15/16) 94
   9.27 DTV MB ASSY (16/16) 96
10. PCB CONNECTION DIAGRAM 98
   10.1 DTV MB ASSY 98
   10.2 TANSHI, SIDE and PC ASSYS 102

1. QUICK REFERENCE UPON SERVICE VISIT

PDP-427XDA, XG Quick Reference upon Service Visit ①
Notes, PD/SD diagnosis, and methods for various settings

Notes when visiting for service

1. Notes when disassembling/reassembling

① **Rear case**
When reassembling the rear case, the screws must be tightened in a specific order. Be careful not to tighten them in the wrong order forcibly. For details, see "Rear Case" in "6. DISASSEMBLY" on ARP3391.

② **Attaching screws for the HDMI connector**
When attaching the HDMI connector after replacing the Main Assy, secure the HDMI connector manually with a screwdriver, but not with an electric screwdriver. If you tighten the screws too tightly with an electric screwdriver, the screw heads may be damaged, in which case the screws cannot be untightened/tightened any more.

2. On parts replacement

① **How to discharge before replacing the Assys**
A charge of significant voltage remains in the Plasma Panel even after the power is turned off. Safely discharge the panel before replacement of parts, in either manner indicated below:
A: Let the panel sit at least for 3 minutes after the power is turned off.
B: Turn the Large Signal System off before the power is turned off then, after 1 minute, turn the power off.
For details, see "10.3 Power ON/OFF Function for the Large-Signal System" on ARP3391.

② **On the settings after replacement of the Assys**
Some boards need settings made after replacement of the Assys. For details, see "7. ADJUSTMENT" on ARP3391.

3. On various settings

① **SR+**
After a repair using a PC, be sure to restore the setting for the RS-232C connector to SR+.

② **Setting in Factory mode**
After a Mask indication into the panel is performed, be sure to set the Mask setting to "OFF" then exit Factory mode.

PD/SD

Item		No. of LEDs flashing	
		Red	Blue
Panel section	Communication with the panel drive IC		Blue 1
	Communication with the module IIC		Blue 2
	DIGTAL-RST2		Blue 3
	Panel high temperature		Blue 4
Main section	Audio		Blue 5
	Communication with the Module microcomputer		Blue 6
	Main 3-wire serial communication		Blue 7
	Main IIC communication		Blue 8
	Communication with the Main microcomputer		Blue 9
	FAN		Blue 10
	Unit high temperature		Blue 11
	No corresponding item		Blue 12
	MTB-RST2/RST4		Blue 13
POWER		Red 2	
SCAN		Red 3	
SCN-5V		Red 4	
Y-DRIVE		Red 5	
Y-DCDC		Red 6	
Y-SUS		Red 7	
ADRS		Red 8	
X-DRIVE		Red 9	
X-DCDC		Red 10	
X-SUS		Red 11	
UNKNOWN		Red 15	

Change of settings

How to enter Factory mode using the supplied remote control unit

In the same way as with the remote control unit supplied with the 6th-generation model

How to enter Integrator mode using the supplied remote control unit

① Enter the Standby mode.
② Press [MENU].
③ Press [TV ⏻].

How to switch UART ① (Integrator)

① Enter the Integrator mode.
② Display "OFF" using [➡].
③ Change the communication speed using [⬇], then [➡].

How to switch UART ② (During Standby)

① Enter the Standby mode.
② Hold [VOL +] or [VOL -] pressed for 3 seconds.
③ Hold [SPLIT] pressed for 3 seconds.
④-1 To set to 232C, press [ENTER].
⑤-2 To set to SR+, press [HOME MENU].

Note: If switching is completed successfully, the red LED will flash twice.
Note 1: Use a remote control unit supplied with the 6th-generation models or later.
Note 2: Do not hold a key pressed for more than 5 seconds.

How to locate several items on the Factory menu

{ } : Item on the Factory menu
[ ] : Key on the remote control unit
" " : Screen indication

1. Confirmation of accumulated power-on time and power-on count
Select {INFORMATION} then {HOUR METER}.
(After entering Factory mode, press [⬇] four times.)

2. Confirmation of the Power-down and Shutdown histories

① **Panel system**
PD: Select {PANEL FACTORY} then {POWER DOWN}.
(After entering Factory mode, press [MUTING] once, press [ENTER], then press [⬇] three times.)
SD: Select {PANEL FACTORY} then {SHUT DOWN}.
(After entering Factory mode, press [MUTING] once, press [ENTER], then press [⬇] four times.)

② **Main Assy**
Select {INFORMATION} then {MAIN NG}.
(After entering Factory mode, press [⬇] once.)

3. How to display the Mask indication

① **Mask indication in the panel side**
1. Select {PANEL FACTORY} then {RASTER MASK SETUP}.
(After entering Factory mode, press [MUTING] once, press [ENTER], then press [⬇] 8 times.)
2. Press [ENTER], then select a Mask indication, using [⬆] or [⬇].

② **Mask (SG screen) indication in the Main Assy (MAIN VDEC)**
1. Select either Input 1, 2 or 4, to which no signal is input (black screen).
2. Select {INITIALIZE} then {SG MODE}. Press [⬅]. (After entering Factory mode, press [MUTING] three, then press [⬇] once.)
Then, the indication at the lower right of the screen changes from "OFF" to "ANA AD YCBCR".
3. You can change Mask patterns by pressing [⬇] to select {SG PATTERN} then using [⬅] or [➡].
Note: When you switch "SG MODE" routes, some displays become monochrome, as they are in Y-signal only mode.

Adjustments and Settings after replacement of the Assys (Procedures in Factory mode)

1. Digital Video Assy: Transfer of backup data
① Select {PANEL FACTORY}, {ETC}, then {BACKUP DATA}. (After entering Factory mode, press [MUTING] once, press [ENTER], press [⬇] seven times, then press [ENTER].)
② Select {TRANSFER}, using [➡], then hold [ENTER] pressed for at least 5 seconds.
③ After transfer of backup data is completed, {ETC} is automatically selected, and the LED on the front panel returns to normal lighting.

2. MAIN Assy : Switching to SR+ from RS-232C
① Enter the Integrator mode. (The way is described above.)
② As SR+ <=> is [OFF] state, switch to [ON] state by using [➡].
③ Turn the POWER switch of the main unit off by the remote control.

3. POWER SUPPLY Unit: Clearance of the accumulated power-on count and maximum temperature value
① Select {PANEL FACTORY}, {ETC}, then {P COUNT INFO}. (After entering Factory mode, press [MUTING] once, press [ENTER], press [⬇] seven times, press [ENTER], then press [⬇] six times.)
② Press [➡] to select "CLEAR". Hold [ENTER] pressed for at least 5 seconds.
After clearance is completed, "ETC" is automatically selected. Clear the maximum temperature value (MAX TEMP) in the same manner.

4. Other Assys: Clearance of the maximum temperature value
① Select {PANEL FACTORY}, {ETC}, then {MAX TEMP}. (After entering Factory mode, press [MUTING] once, press [ENTER], press [⬇] seven times, press [ENTER], then press [⬇] seven times.)
② Press [➡] to select "CLEAR". Hold [ENTER] pressed for at least 5 seconds.
After clearance is completed, "ETC" is automatically selected.

PDP-427XDA, XG Quick Reference upon Service Visit ②
Mode transition and structure of layers in Service Factory mode

Mode transition in Service Factory mode

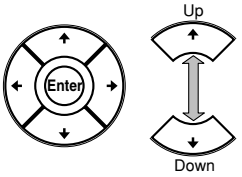

- To shift to another mode, press [MUTING].
- To shift to another item in a specific mode, press [⬆] or [⬇].
- To shift to the next nested layer below for an item with a "(+)" indication, press [ENTER]. To return to the next nested layer above, also press [ENTER].

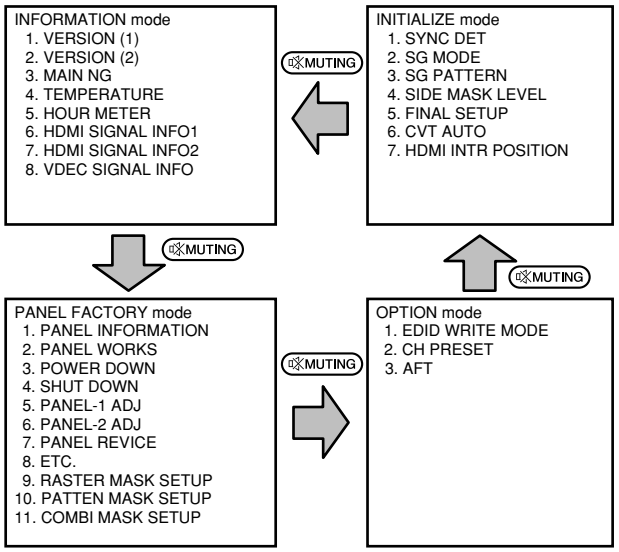

Structure of Layers in Service Factory Mode

INFORMATION mode	
├ 1. VERSION (1)	Flash Versions for PANEL system and MAIN system
├ 2. VERSION (2)	Flash Versions for DTV system
├ 3. MAIN NG	SD histories for MAIN (Going Clear model by SET key)
│ └ 3-1. CLEAR	Select Yes by [➡] key ➡ pushing and hold [SET] key
├ 4. TEMPERATURE	TEMP 1, TEMP2 and FAN mode are displayed
├ 5. HOUR METER	Hour meter and number of Power ON are displayed
│ └ 5-1. CLEAR	Select Yes by [➡] key ➡ pushing and hold [SET] key
├ 6. HDMI SIGNAL INFO 1	For factory use
├ 7. HDMI SIGNAL INFO 2	Signal info of HDMI are displayed (Detail are on SM)
├ 8. VDEC SIGNAL INFO	For factory use
PANEL FACTORY mode	Refer to [PANEL FACTORY MODE]
OPTION	
├ 1. EDID WRITE MODE	For factory use
├ 2. CH PRESET	For production line use
└ 3. AFT	For production line use
INITIALIZE	
├ 1. SYNC DET (+)	For factory use
│ 2. SG MODE	SG signal from MAIN VDEC (Composite signal is required)
│ 3. SG PATTERN	For factory use
├ 4. SIDE MASK LEVEL(+)	For factory use
│ ├ 4-1. R MASK LEVEL	
│ ├ 4-2. G MASK LEVEL	
│ └ 4-3. B MASK LEVEL	
├ 5. FINAL SETUP	Set to Factory default settings (it should perform after
│ └ 5-1. DATA RESET	replacing a MAIN board)
├ 6. CVT AUTO	For factory use
└ 7. HDMI INTR POSITION(+)	For factory use

Structure of Layers in Panel Factory Mode 1

1. PANEL INFORMATION	Version indication of the panel
2. PANEL WORKS	Indications of the accumulated power-on time, pulse-meter count, and power-on count of the panel
3. POWER DOWN	Indication of the Power-down history
4. SHUT DOWN	Indication of the Shutdown history
5. PANEL-1 ADJ (+)	
├ 1. X-SUS B	Modification not required because these items are basically for factory presetting
├ 2. Y-SUS B	
├ 3. Y-SUSTAIL T1	
├ 4. Y-SUSTAIL T2	
├ 5. Y-SUSTAIL W	
├ 6. XY-RST W1	
├ 7. XY-RST W2	
├ 8. VOL SUS	Settings required after replacement of the panel
├ 9. VOL OFFSET	
├ 10. VOL RST P	
└ 11. SUS FREQ.	For AM noise prevention (Depending on the mode, brightness of the screen changes.)
6. PANEL-2 ADJ (+)	
├ 1. R-HIGH	Parameters for the WB adjustment of the panel, which are required during adjustment after panel replacement
├ 2. G-HIGH	
├ 3 .B-HIGH	
├ 4. R-LOW	
├ 5. G-LOW	
├ 6. B-LOW	
└ 7. ABL	Setting of the power consumption. A setting table is available for each vertical signal.

To "Structure of Layers in Panel Factory Mode 2"

Structure of Layers in Panel Factory Mode 2

7. PANEL REVISE (+)	
├ R-LEVEL	Items for use by engineers
├ G-LEVEL	
└ B-LEVEL	
8. ETC (+)	
├ 1. BACKUP DATA	For transferring backup data (after replacement of the DIGITAL Assy)
├ 2. DIGITAL EEPROM	To clear data of the digital video
├ 3. PD INFO.	For clearance of data for the corresponding items. The clearing method is the same: Select "CLEAR", using [➡], then hold [SET] pressed for at least 5 seconds. After clearance is completed, {ETC} is automatically selected.
├ 4. SD INFO.	
├ 5. HR-MTR INFO.	
├ 6. PM/B1-B5	
├ 7. P COUNT INFO.	
└ 8. MAX TEMP.	
9. RASTER MASK SETUP (+)	
├ 1. MASK OFF	For use while Raster Mask (full mask) is displayed. Use [⬆] or [⬇] to select the type of mask.
├ 2. RST MASK 01	
≈ • • • • •	
└ 25. RST MASK 24	
10. PATTEN MASK SETUP (+)	
├ 1. MASK OFF	For use while Pattern Mask is displayed. Use [⬆] or [⬇] to select the type of mask.
├ 2. PTN MASK 01	
≈ • • • • •	
└ 40. PTN MASK 39	
11. COMBI MASK SETUP (+)	
├ 1. MASK OFF	For use while Combination Mask is displayed. Use [⬆] or [⬇] to select the type of mask.
├ 2. CMB MASK 01	
≈ • • • • •	
└ 11. CMB MASK 10	

2. CONTRAST OF MISCELLANEOUS PARTS

NOTES:
- *Parts marked by "NSP" are generally unavailable because they are not in our Master Spare Parts List.*
- *The ⚠ mark found on some component parts indicates the importance of the safety factor of the part. Therefore, when replacing, be sure to use parts of identical designation.*
- *Screws adjacent to ▼ mark on product are used for disassembly.*
- *Reference Nos. indicate the pages and Nos. in the service manual for the base model.*
- *For the applying amount of lubricants or glue, follow the instructions in this manual. (In the case of no amount instructions, apply as you think it appropriate.)*
- *When ordering resistors, first convert resistance values into code form as shown in the following examples.*

Ex.1 When there are 2 effective digits (any digit apart from 0), such as 560 ohm and 47k ohm (tolerance is shown by J=5%, and K=10%).

560 Ω	→	*56 × 10¹*	→	*561* ..... *RD1/4PU [5][6][1] J*
47k Ω	→	*47 × 10³*	→	*473* ..... *RD1/4PU [4][7][3] J*
0.5 Ω	→	*R50*		..... *RN2H [R][5][0] K*
1 Ω	→	*1R0*		..... *RS1P [1][R][0] K*

Ex.2 When there are 3 effective digits (such as in high precision metal film resistors).

5.62k Ω	→	*562 × 10¹*	→	*5621* ..... *RN1/4PC [5][6][2][1] F*

■ CONTRAST TABLE

PDP-427XG/DLFR, PDP-427XDA/YP and PDP-427XA/WYV5 are constructed the same except for the following :

Ref. No.	Mark	Symbol and Description	Part No. PDP-427XA /WYV5	Part No. PDP-427XG /DLFR	Part No. PDP-427XDA /YP	Remarks
		PCB ASSEMBLIES				
P23- 1		MAIN ASSY	AWV2318	AWV2322	AWV2322	
	NSP	IO ASSY	AWV2319	AWV2323	AWV2323	
P23- 2		├TANSHI ASSY	AWW1161	AWW1164	AWW1164	
P13- 2		├SIDE ASSY	AWW1162	AWW1165	AWW1165	
P23- 3		└PC ASSY	AWW1163	AWW1166	AWW1166	
P19- 4		42 Y DRIVE ASSY	AWV2400	AWV2371	AWV2371	
	NSP	42 DIGITAL ASSY	AWV2435	AWV2372	AWV2372	
P19- 5		└42 DIGITAL ASSY	AWW1240	AWW1193	AWW1193	
		PACKING SECTION				
P11- 1	⚠	Power Cord (2 m)	ADG1214	Not used	ADG1245	
P11- 2		Power Cord LID	AHC1085	AHC1085	Not used	
P11- 3		Remote Control Unit	AXD1540	AXD1543	AXD1542	
P11- 4		Battery Cover	AZN2626	AZA7424	AZA7424	
P11- 5		Operating Instructions (Italian, Dutch, Spanish)	ARC1563	Not used	Not used	
P11- 6		Operating Instructions (English, French, German)	ARE1429	Not used	Not used	
		Operating Instructions (English, Spanish, Portguese(B), Trad-Chinese)	Not used	ARE1434	Not used	
		Operating Instructions (English)	Not used	Not used	ARB1570	
P11- 8	NSP	Dry Cell Battery (R06, AA)	VEM1031	AEX1025	VEM1031	
P11-16	NSP	Polyethylene Bag	AHG1340	Not used	Not used	
P11-15	NSP	Warranty Card	ARY1114	Not used	ARY1192	
P11-24		Upper Carton	AHD3516	AHD3518	AHD3519	
	⚠NSP	AC Power Cord	Not used	ADG1232	Not used	Accessories
	⚠NSP	AC Power Cord	Not used	ADG1233	Not used	Accessories
	⚠NSP	AC Power Cord	Not used	ADG1234	Not used	Accessories
	⚠NSP	AC Power Cord	Not used	ADG1235	Not used	Accessories
	⚠NSP	AC Power Cord	Not used	ADG1236	Not used	Accessories
	⚠NSP	AC Power Cord	Not used	ADG1238	Not used	Accessories
	⚠NSP	AC Power Cord	Not used	ADG1239	Not used	Accessories
	⚠NSP	AC Power Cord	Not used	ADG1241	Not used	Accessories
	⚠NSP	AC Power Cord	Not used	ADG1242	Not used	Accessories
	⚠NSP	AC Power Cord	Not used	ADG1243	Not used	Accessories
	⚠NSP	AC Power Cord	Not used	ADG1244	Not used	Accessories
	⚠NSP	AC Power Cord	Not used	ADG1246	Not used	Accessories
		DTV Tuner Board	Not used	Not used	AXY1147	*
		Filter	Not used	Not used	CTX1054	No. 1

* DTV Tuner Board has no Service part.

Ref. No.	Mark	Symbol and Description	Part No. PDP-427XA /WYV5	Part No. PDP-427XG /DLFR	Part No. PDP-427XDA /YP	Remarks
		REAR SECTION				
P13-13	NSP	Name Label	AAL2805	AAL2807	AAL2808	
P13-18		Terminal Label A	AAX3332	AAX3386	AAX3345	
P13-19		Terminal Label C	AAX3339	AAX3336	AAX3336	
P13-20		Terminal Label B	AAX3417	AAX3420	AAX3420	
P13-21		Terminal Panel B	ANC2403	Not used	Not used	
P13-21		Terminal Panel B (42G)	Not used	ANC2404	ANC2404	
		Label	Not used	AAX3446	Not used	No. 2
		Screw	Not used	Not used	ABZ30P060FTC	No. 3
		FRONT SECTION				
P15-10		Front Case ASSY	AMB2969	AMB2969	AMB2957	
		PANEL CHASSIS SECTION				
P21- 1	NSP	Panel Chassis (427S) ASSY	AWU1207	AWU1191	AWU1191	
		PDP SERVICE PANEL ASSY				
P24- 1		PDP SERVICE PANEL ASSY (427)	AWU1208	AWU1225	AWU1225	
		MULTI BASE SECTION				
P23- 1		MAIN ASSY	AWV2318	AWY2322	AWY2322	
P23- 9		Flexible Cable (J214)	Not used	Not used	ADD1450	No. 4
P23- 15		Flexible Cable (J215)	Not used	Not used	ADD1451	No. 5
P23- 16		12P Housing Wire (J126)	Not used	Not used	ADX3390	No. 6
P23- 35		Multi Base Assy	ANA2019	ANA2019	ANA1952	
P23- 36		Terminal Panel A	ANC2399	ANC2399	Not used	
P23- 36		Terminal Panel A (AU)	Not used	Not used	ANC2416	
P23- 41	⚠	Gasket ED	Not used	Not used	ANK1863	No. 7
P23- 45		Screw	Not used	Not used	BBZ30P060FTB	No. 8
P23- 47		Screw	Not used	Not used	PMB30P080FNI	No. 9
	⚠	Gasket AD	Not used	Not used	ANK1859	No. 10
		Bottom Can	Not used	Not used	XNA1005	No. 11
		Top Can	Not used	Not used	XNG1002	No. 12
P13-36		Screw	BPZ30P080FTB	BPZ30P080FTB	BPZ30P080FTB	No. 13

Notes : ÷The numbers in the remarks column correspond to the numbers on the " EXPLODED VIEWS ".
÷ For PCB ASSEMBLIES, Refer to "CONTRAST OF PCB ASSEMBLIES", "9. SCHEMATIC DIAGRAM" and "10 PCB CONNECTION DIAGRAM" .

■ EXPLODED VIEWS

• EXTERIOR (Rear Section)

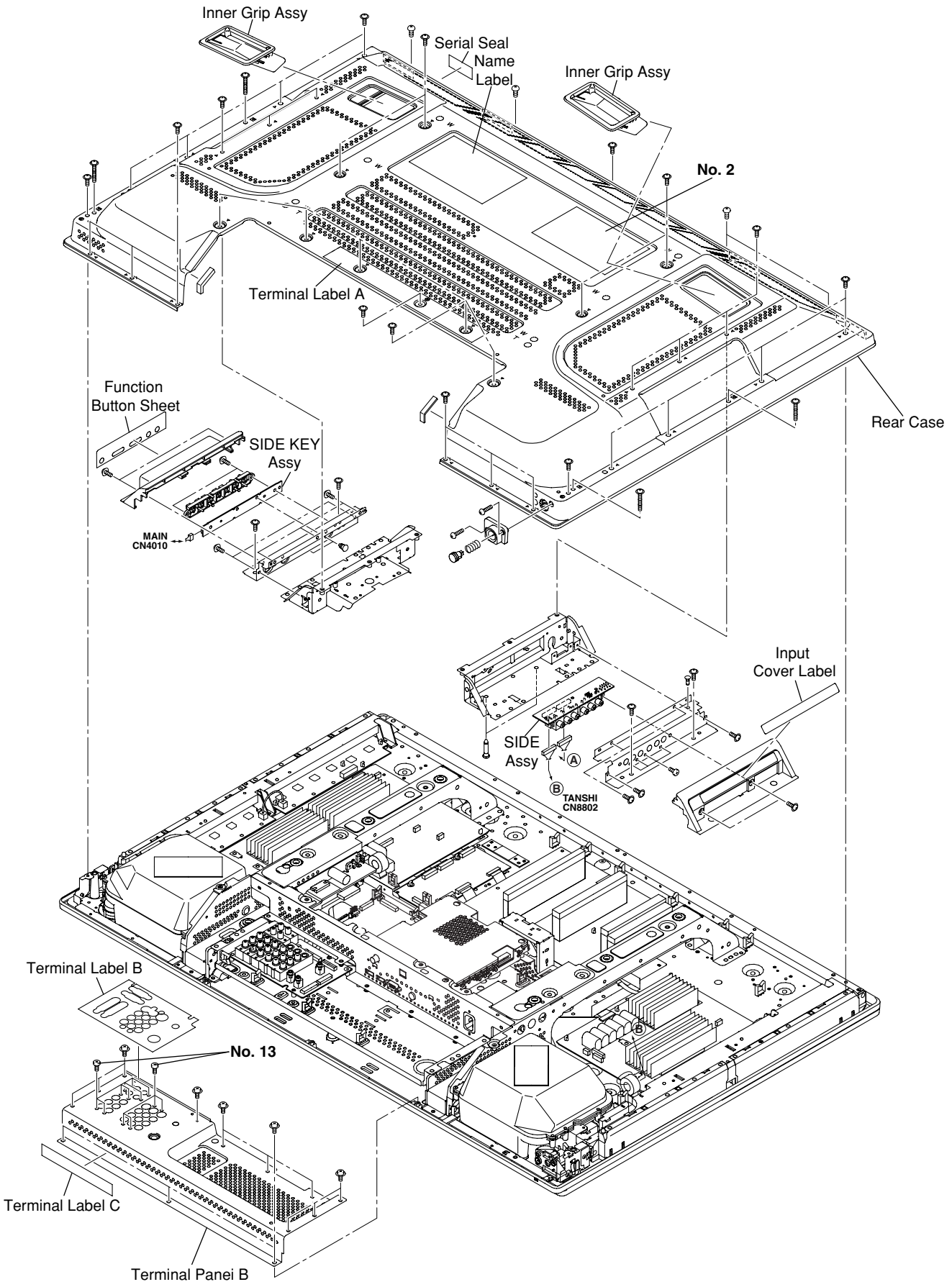

• EXTERIOR (Mult Base Section)

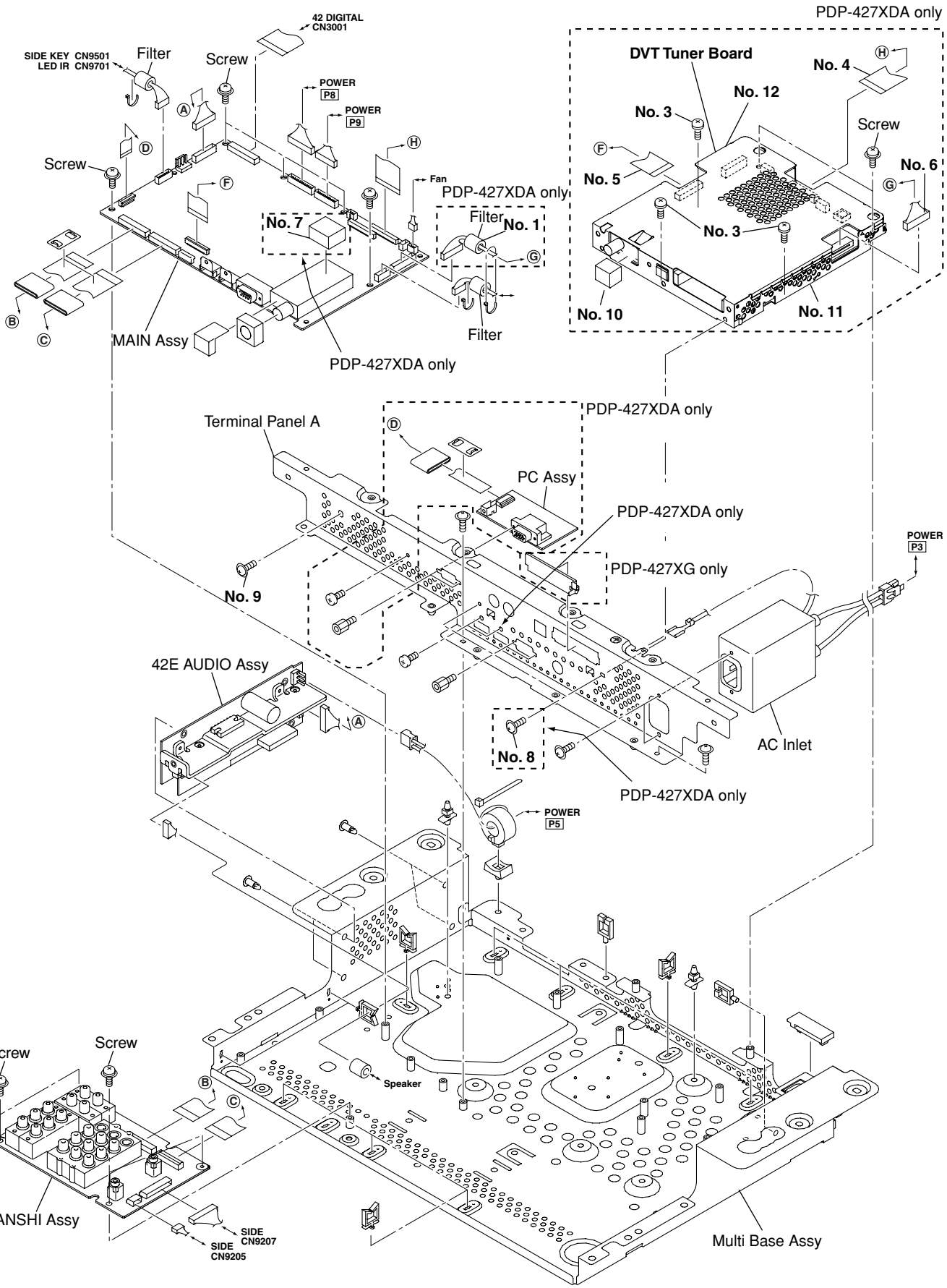

• PDP SERVICE PANEL ASSY 427 (AWU1225)

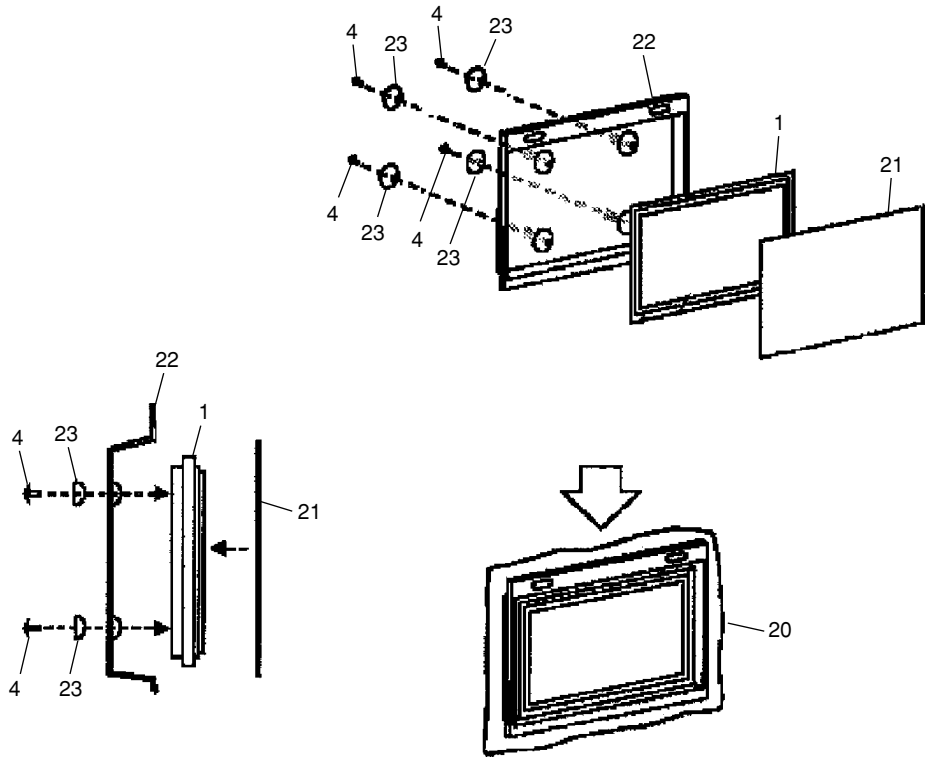

PDP SERVICE PANEL ASSY 427 (AWU1225) PARTS LIST

Mark	No.	Description	Part No.
NSP	1	Panel Chassis (427) Assy	AWU1191
	2	Caution Label	AAX3031
NSP	3	Drive Voltage Label	ARW1097
	4	Screw	PMB50P150FTC
	5	Screw	ABA1351
	6	Wire Saddle	AEC1745
	7	PCB Support	AEC1938
	8	Vinyl Bag S	AHG1338
NSP	9	Vinyl Bag	AHG1340
	10	Y Drive Protection Sheet A	AMR3632
	11	Power Sheet (427) A	AMR3648
	12	Address Gasket (42)	ANK1877
	13	Rivet A	BEC1158
	14	Pad 42SINGLE(T-L)	AHA2550
	15	Pad 42SINGLE(T-R)	AHA2551
	16	Pad 42SINGLE(B-L)	AHA2552
	17	Pad 42SINGLE(B-R)	AHA2553
	18	Upper Carton (42SINGLE)	AHD3480
	19	Under Carton (42SINGLE)	AHD3481
	20	Polyethylene Bag	AHG1381
	21	Packing Sheet	AHG1386
	22	Tray (FT)	AHX1158
	23	Cup Spacer (15)	ANG2936

■ CONTRAST OF PCB ASSEMBLIES

SIDE ASSY

Although AWW1162 and AWW1165 are different in part number, they consist of the same components.

PC ASSY

Although AWW1163 and AWW1166 are different in part number, they consist of the same components.

42 DIGITAL ASSY

AWW1193 and AWW1240 are constructed the same except for the following :

• DIGITAL IF BLOCK

Mark	Symbol and Description	Part No.		Remarks
		AWW1240	AWW1193	
	R3003,R3025	Not used	RS1/16SS0R0J	

TANSHI ASSY

AWW1164 and AWW1161 are constructed the same except for the following :

Mark	Symbol and Description	Part No.		Remarks
		AWW1161	AWW1164	
	D 9001	Not used	1SS301	
	D 9012	Not used	UDZS5R1(B)	
	D 9013	1SS301	UDZS5R1(B)	
	D 9015, 9016	UDZS5R1(B)	Not used	
	Q 8801- 8804	HN1A01FU	Not used	
	Q 8805- 8808, 9019- 9020	2SA1586	Not used	
	Q 8809- 8811	UMD2N	Not used	
	Q 8812, 8814, 8821, 8823, 8825- 8829	2SC4116	Not used	
	Q 8832	2SC4116	Not used	
	Q 8813	HN1C01FU	Not used	
	Q 9001	HN1B04FU	HN1A01FU	
	Q 9002	Not used	HN1A01FU	
	Q 9003, 9004	Not used	2SA1586	
	Q 9005	Not used	UMD2N	
	Q 9006	Not used	2SD2114K	
	Q 9007, 9008, 9014	Not used	2SC4116	
	Q 9009, 9011	2SC4116	2SD2114K	
	Q 9010	2SC4116	HN1B04FU	
	Q 9012	HN1A01FU	2SC4116	
	Q 9013	UMD2N	2SC4116	
	Q 9016	2SD2114K	UMD2N	
	Q 9017, 9018	2SD2114K	Not used	
	C 8801, 8814, 8816	DCH1201	Not used	
	C 8802	DCH1165	Not used	
	C 8803	CKSSYF104Z16	Not used	
	C 8804, 8805	CCG1205	Not used	
	C 8807	Not used	CKSRYB102K50	
	C 8808, 8809	Not used	CKSRYB105K10	
	C 8810	CCG1205	CKSRYB102K50	
	C 8811	CCG1205	CKSSYB471K50	
	C 8812	DCH1201	CKSSYB471K50	
	C 8813	CKSSYF104Z16	CKSSYB471K50	
	C 8815	DCH1165	Not used	
	C 8817	DCH1201	CKSSYB103K16	
	C 8818	CKSSYF104Z16	CKSSYB103K16	

Mark	Symbol and Description	Part No.		Remarks
		AWW1161	AWW1164	
	C 8819	DCH1165	CKSRYB105K10	
	C 8820, 8821, 9037, 9045, 9046	CCG1205	CKSRYB105K10	
	C 8822, 8823, 9036, 9055- 9058	Not used	CKSRYB105K10	
	C 8825	CKSRYB102K50	CKSRYB105K10	
	C 8826- 8836, 8857, 8858	CKSSYB102K50	Not used	
	C 8837- 8839	ACH1454	Not used	
	C 8840- 8848, 8850, 8851, 8853- 8856	CKSRYB105K10	Not used	
	C 9001	CKSSYF104Z16	CKSSYB473K16	
	C 9002	CKSSYB103K16	CKSSYB473K16	
	C 9003, 9049	Not used	CKSSYB473K16	
	C 9004	Not used	CKSSYF104Z16	
	C 9006	DCH1165	Not used	
	C 9007	DCH1201	DCH1165	
	C 9008, 9009	CKSSYB104K10	CCG1205	
	C 9010	CKSSYB471K50	CCG1205	
	C 9011	CKSSYB471K50	DCH1201	
	C 9012	CKSSYB471K50	Not used	
	C 9013	CKSSYF104Z16	CKSSYB103K16	
	C 9014	DCH1201	CKSSYB103K16	
	C 9015, 9020	Not used	CKSSYB102K50	
	C 9016, 9018- 9019, 9021, 9024, 9027	Not used	CKSSYB103K16	
	C 9017	CEHVKW470M6R3	CKSSYB102K50	
	C 9022, 9025	CKSRYB105K10	CKSSYB102K50	
	C 9023	CKSSYB102K50	CKSSYB103K16	
	C 9026	CKSRYB102K50	CKSSYB102K50	
	C 9028- 9030	CKSRYB105K10	Not used	
	C 9031	CKSRYB102K50	CKSSYF104Z16	
	C 9032	CKSRYB102K50	CEHVKW470M6R3	
	C 9038	CKSSYB473K16	CKSRYB105K10	
	C 9039, 9040	CKSSYB103K16	CKSRYB105K10	
	C 9043	CKSRYB224K10	CKSRYB105K10	
	C 9044	CKSSYF104Z16	ACH1454	
	C 9047, 9048, 9059	Not used	CKSSYB103K16	
	C 9050, 9051	Not used	DCH1201	
	C 9052, 9053	Not used	DCH1165	
	C 9054	Not used	CKSRYB224K10	
	C 9060, 9061	Not used	CKSSYB104K10	
	F 8801- 8807	Not used	CTF1557	
	F 9001- 9007	CTF1557	Not used	
	R 8801, 8803	RS1/10S151J	RS1/16S75R0F	
	R 8802	RS1/10S121J	RS1/16S75R0F	
	R 8804, 8805,8807, 8809, 8810	RS1/10S151J	Not used	
	R 8806, 8808	RS1/10S121J	Not used	
	R 8822	RS1/16SS392J	RS1/16S75R0F	
	R 8823, 8824	RS1/16SS102J	RS1/16S75R0F	
	R 8839- 8841	RS1/16S75R0F	RS1/16SS0R0J	
	R 8866, 8894, 8898, 8915- 8917, 8922	RS1/16S75R0F	Not used	
	R 9006- 9008, 9012, 9013	RS1/16SS101J	RS1/16S75R0F	
	R 9014, 9021- 9023	Not used	RS1/16S75R0F	
	R 9037, 9038	RS1/16S75R0F	RS1/16SS181J	
	R 9040	RS1/16S75R0F	RS1/16SS103J	
	R 9046, 9047	RS1/16S75R0F	RS1/16SS222J	
	R 9048	RS1/16S75R0F	RS1/16S821J	
	R 9072	RS1/16SS472J	RS1/16S75R0F	
	R 9074, 9075	RS1/16SS152J	RS1/16S75R0F	

AWW1164 and AWW1161 are constructed the same except for the following :

Mark	Symbol and Description	Part No.		Remarks
		AWW1161	AWW1164	
	CN 8801 (50P CONNECTOR PBF)	Not used	AKM1349	
	CN 8802 (50P CONNECTOR PBF)	AKM1349	Not used	
	JA 8801 (RGB CONNECTOR)	AKP1295	VKN1449	
	JA 8802 (RGB CONNECTOR)	AKP1295	Not used	
	JA 8803	AKP1295	AKN1081	
	JA 8804, 8805 (3P PIN JACK)	Not used	AKB1332	
	JA 9001 (3P PIN JACK)	AKB1332	AKB1339	
	JA 9002 (MINI JACK)	VKN1449	AKB1331	
	JA 9003 (9P 3S PIN JACK)	Not used	AKB1334	
	JA 9004 (4POLE MINI JACK)	AKN1081	Not used	
	JA 9005 (3P PIN JACK)	AKB1340	Not used	

MAIN ASSY

AWV2322 and AWV2318 are constructed the same except for the following :

Mark	Symbol and Description	Part No.		Remarks
		AWV2318	AWV2322	
	[BOARD IF BLOCK]			
	R 4027, 4028	RS1/16SS473J	RS1/16SS0R0J	
	R 4032, 4033, 4056	RS1/16SS0R0J	Not used	
	R 4034	RS1/16SS0R0J	RS1/16SS473J	
	R 4058	Not used	RS1/16SS0R0J	
	[REG 0 BLOCK]			
	R 4199	Not used	RS1/16S0R0J	
	F 4102	VTF1080	Not used	
	[ATUNER BLOCK]			
⚠	U 4501 (FRONT END)	AXF1172	AXF1173	
	IC 4501	MSP3417G	MSP3455G	
	Q 4501	DTC124EUA	Not used	
	C 4520	CEHVKW101M6R3	Not used	
	C 4522	Not used	ACH1429	
	[AV SW BLOCK]			
	IC 4703	PCM1803DB	Not used	
	IC 4704	NJU26901E2	Not used	
	IC 4705	PCM1754DBQ	Not used	
	IC 4706	NJM12904V	Not used	
	Q 4718	DTA124EUA	Not used	
	Q 4719, 4720	2SC4116	Not used	
	Q 4722, 4723	HN1B04FU	Not used	
	C 4701, 4761, 4763, 4764, 4766	CKSSYF104Z16	Not used	
	C 4702, 4708, 4736, 4742, 4759, 4760	CKSRYB105K10	Not used	
	C 4709, 4738, 4743	Not used	CKSRYB105K10	
	C 4722, 4762, 4765, 4769- 4771	DCH1201	Not used	
	C 4767, 4768	DCH1165	Not used	
	C 4772- 4774	CKSSYF104Z16	Not used	
	C 4775, 4776	CKSSYF681K50	Not used	
	C 4777, 4779,	CKSSYB152K50	Not used	
	C 4778	CCSSCH221J50	Not used	
	C 4780- 4783	CKSRYB105K10	Not used	
	C 4784, 4785	CKSSCH331J50	Not used	
	X 4701 (CRYSTAL)	ASS1204	Not used	

AWV2322 and AWV2318 are constructed the same except for the following :

Mark	Symbol and Description	Part No.		Remarks
		AWV2318	AWV2322	
	R 4815- 4817	RS1/10S0R0J	Not used	
	R 4849	RS1/16S472J	Not used	
	R 4851, 4852	RS1/16S182J	Not used	
	R 4853	RS1/16S222J	Not used	
	R 4860, 4861,4863, 4865	RS1/16S102J	Not used	
	R 4866	RAB4CQ470J	Not used	
	[RGB SW BLOCK]			
	D 4901- 4903	UDZS4R7(B)	Not used	
	Q 4901- 4903	2SA1586	Not used	
	Q 4904, 4906	HN1B04FU	Not used	
	C 4911, 4935	CKSRYB474K10	Not used	
	C 4916, 4929- 4931	CKSSYF104Z16	Not used	
	R 4913- 4918	RS1/16SS3301F	Not used	
	R 4919	RS1/16SS5600F	Not used	
	R 4921, 4928, 4932	RS1/16SS75R0F	Not used	
	R 4926, 4930	RS1/16SS5600F	Not used	
	[VDEC BLOCK]			
	C 5110- C5112	Not used	CKSSYB104K10	
	C 5136, 5140, 5150	CKSSYB103K16	Not used	
	R 5111	Not used	RS1/16SS103J	
	[IF UCOM BLOCK]			
	IC 8308	TC74VHC00FTS1	Not used	
	Q 8306, 8308	DTC124EUA	Not used	
	Q 8307, 8312	2SA1586	Not used	
	Q 8309, 8313	2SC4116	Not used	
	Q 8310, 8314	HN1C01FU	Not used	
	D 8304, 8305	1SS355	Not used	
	R 8368, 8371, 8374, 8378, 8381	RS1/16SS103J	Not used	
	R 8350, 8384, 8385	Not used	RS1/16SS103J	
	[MAIN UCOM BLOCK]			
	D 8404, 8405	1SS301	Not used	
	[DSEL BLOCK]			
	R 8017	RS1/16SS101J	Not used	

3. BLOCK DIAGRAM

3.1 SIGNAL BLOCK DIAGRAM

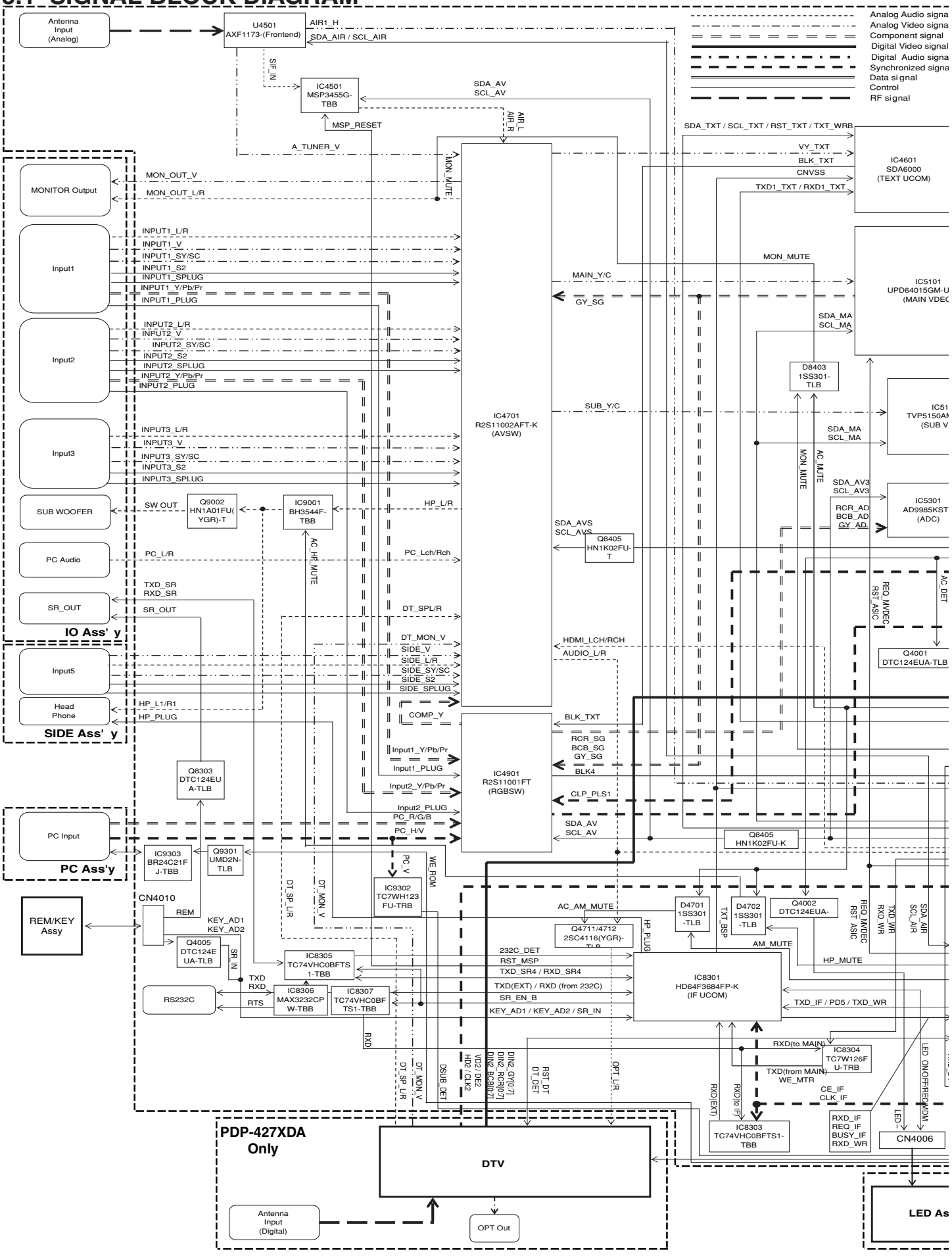

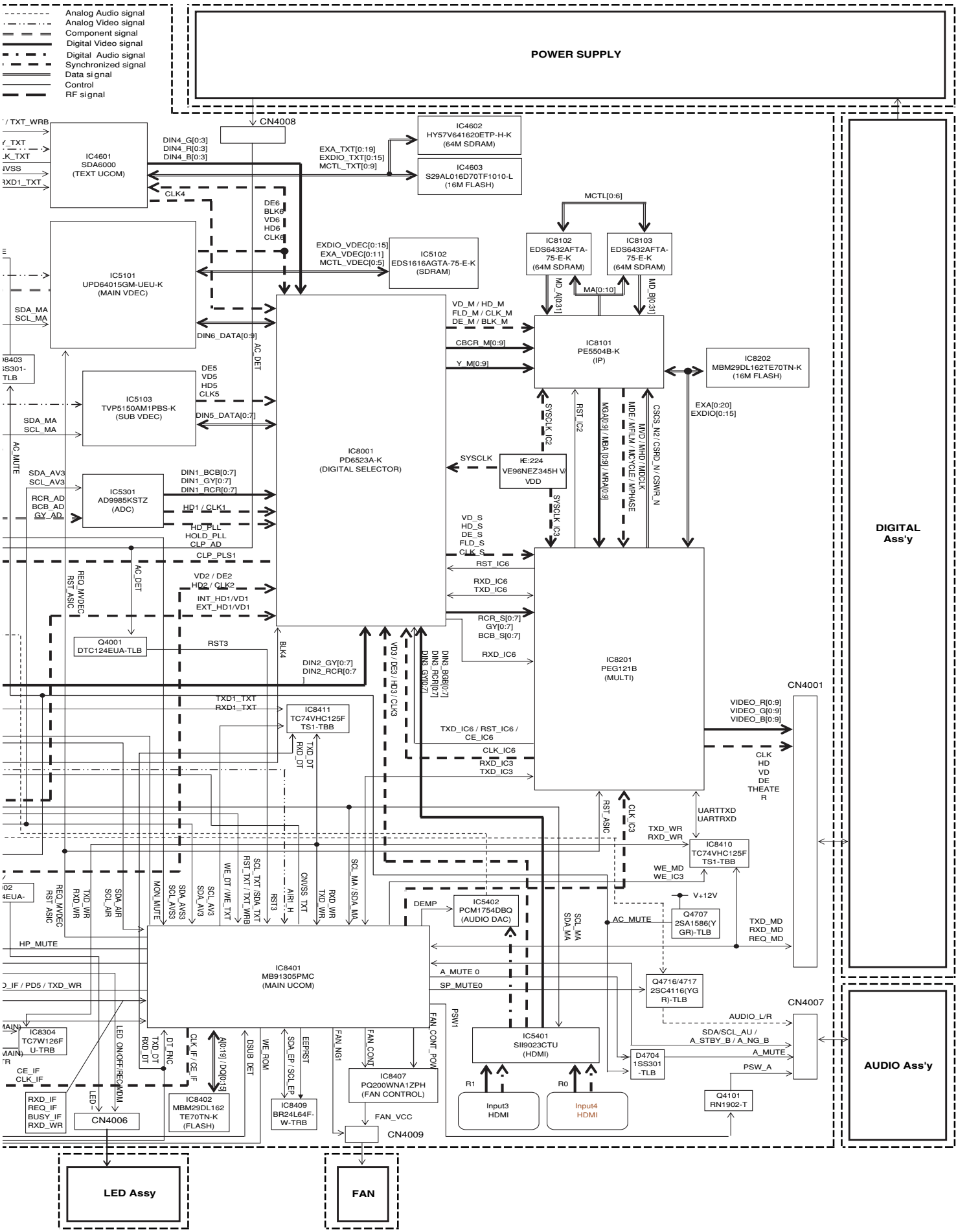
Analog Audio signal
Analog Video signal
Component signal
Digital Video signal
Digital Audio signal
Synchronized signal
Data signal
Control
RF signal
POWER SUPPLY
CN4008
IC4601
SDA6000
(TEXT UCOM)
IC4602
HY57V641620ETP-H-K
(64M SDRAM)
IC4603
S29AL016D70TF1010-L
(16M FLASH)
IC5101
UPD64015GM-UEU-K
(MAIN VDEC)
IC5102
EDS1616AGTA-75-E-K
(SDRAM)
IC8102
EDS6432AFTA-75-E-K
(64M SDRAM)
IC8103
EDS6432AFTA-75-E-K
(64M SDRAM)
IC8001
PD6523A-K
(DIGITAL SELECTOR)
IC8101
PE5504B-K
(IP)
IC8202
MBM29DL162TE70TN-K
(16M FLASH)
IC5103
TVP5150AM1PBS-K
(SUB VDEC)
IC5301
AD9985KSTZ
(ADC)
IC8201
PEG121B
(MULTI)
IC8411
TC74VHC125F
TS1-TBB
IC8410
TC74VHC125F
TS1-TBB
IC8401
MB91305PMC
(MAIN UCOM)
IC5402
PCM1754DBQ
(AUDIO DAC)
IC5401
SII9023CTU
(HDMI)
IC8407
PQ200WNA1ZPH
(FAN CONTROL)
IC8402
MBM29DL162
TE70TN-K
(FLASH)
IC8409
BR24L64F-
W-TRB
IC8304
TC7W126F
U-TRB
Q4001
DTC124EUA-TLB
Q4707
2SA1586(Y
GR)-TLB
Q4716/4717
2SC4116(YG
R)-TLB
D4704
1SS301
-TLB
Q4101
RN1902-T
CN4001
CN4006
CN4007
CN4009
DIGITAL
Ass'y
AUDIO Ass'y
LED Assy
FAN
Input3
HDMI
Input4
HDMI
MCTL[0:6]
MA[0:10]
MD_A[0:31]
MD_B[0:31]
EXA_TXT[0:19]
EXDIO_TXT[0:15]
MCTL_TXT[0:9]
EXDIO_VDEC[0:15]
EXA_VDEC[0:11]
MCTL_VDEC[0:5]
DIN4_G[0:3]
DIN4_R[0:3]
DIN4_B[0:3]
CLK4
DE6
BLK6
VD6
HD6
CLK6
DIN6_DATA[0:9]
DE5
VD5
HD5
CLK5
DIN5_DATA[0:7]
AC_DET
AC_MUTE
SDA_MA
SCL_MA
SDA_AV3
SCL_AV3
RCR_AD
BCB_AD
GY_AD
DIN1_BCB[0:7]
DIN1_GY[0:7]
DIN1_RCR[0:7]
HD1 / CLK1
HD_PLL
HOLD_PLL
CLP_AD
CLP_PLS1
VD2 / DE2
HD2 / CLK2
INT_HD1/VD1
EXT_HD1/VD1
REQ_MVDEC
RST_ASIC
RST3
BLK4
DIN2_GY[0:7]
DIN2_RCR[0:7]
VD3 / DE3 / HD3 / CLK3
DIN3_BGB[0:7]
DIN3_RCR[0:7]
DIN3_GY[0:7]
VD_M / HD_M
FLD_M / CLK_M
DE_M / BLK_M
CBCR_M[0:9]
Y_M[0:9]
SYSCLK_IC2
RST_IC2
MGA[0:9] / MBA [0:9] / MRA[0:9]
MDE /MFILM / MCYCLE / MPHASE
MVD /MHD /MDCLK
CSCS_N2 / CSRD_N / CSWR_N
EXA[0:20]
EXDIO[0:15]
SYSCLK
SYSCLK_IC3
VD_S
HD_S
DE_S
FLD_S
CLK_S
RST_IC6
RXD_IC6
TXD_IC6
RCR_S[0:7]
GY[0:7]
BCB_S[0:7]
TXD_IC6 / RST_IC6 /
CE_IC6
CLK_IC6
RXD_IC3
TXD_IC3
VIDEO_R[0:9]
VIDEO_G[0:9]
VIDEO_B[0:9]
CLK
HD
VD
DE
THEATE
R
UARTTXD
UARTRXD
TXD_WR
RXD_WR
WE_MD
WE_IC3
V+12V
AC_MUTE
TXD_MD
RXD_MD
REQ_MD
TXD1_TXT
RXD1_TXT
TXD_DT
RXD_DT
MON_MUTE
SDA_AIR
SCL_AIR
SDA_AV3
SCL_AV3
WE_DT / WE_TXT
RST_TXT / TXT_WRB
AIR1_H
CNVSS TXT
SCL_MA /SDA_MA
DEMP
HP_MUTE
A_MUTE 0
SP_MUTE0
PSW1
FAN_NG1
FAN_CONT
FAN_CONT_POW
AUDIO_L/R
SDA/SCL_AU /
A_STBY_B / A_NG_B
A_MUTE
PSW_A
R1
R0
DT_FNC
CE_IF
CLK_IF
A0:19] / DQ0:15]
DSUB DET
WE_ROM
SDA_EP / SCL_EP
EEPRST
LED_ON/OFF/REQ_MDM
RXD_IF
REQ_IF
BUSY_IF
RXD_WR
FAN_VCC

4. DIAGNOSIS

4.1 TROUBLE SHOOTING

4.1.1 FLOWCHART OF FAILURE ANALYSIS FOR THE VIDEO SYSTEM

Flowchart of Failure Analysis for The Video-system Assy

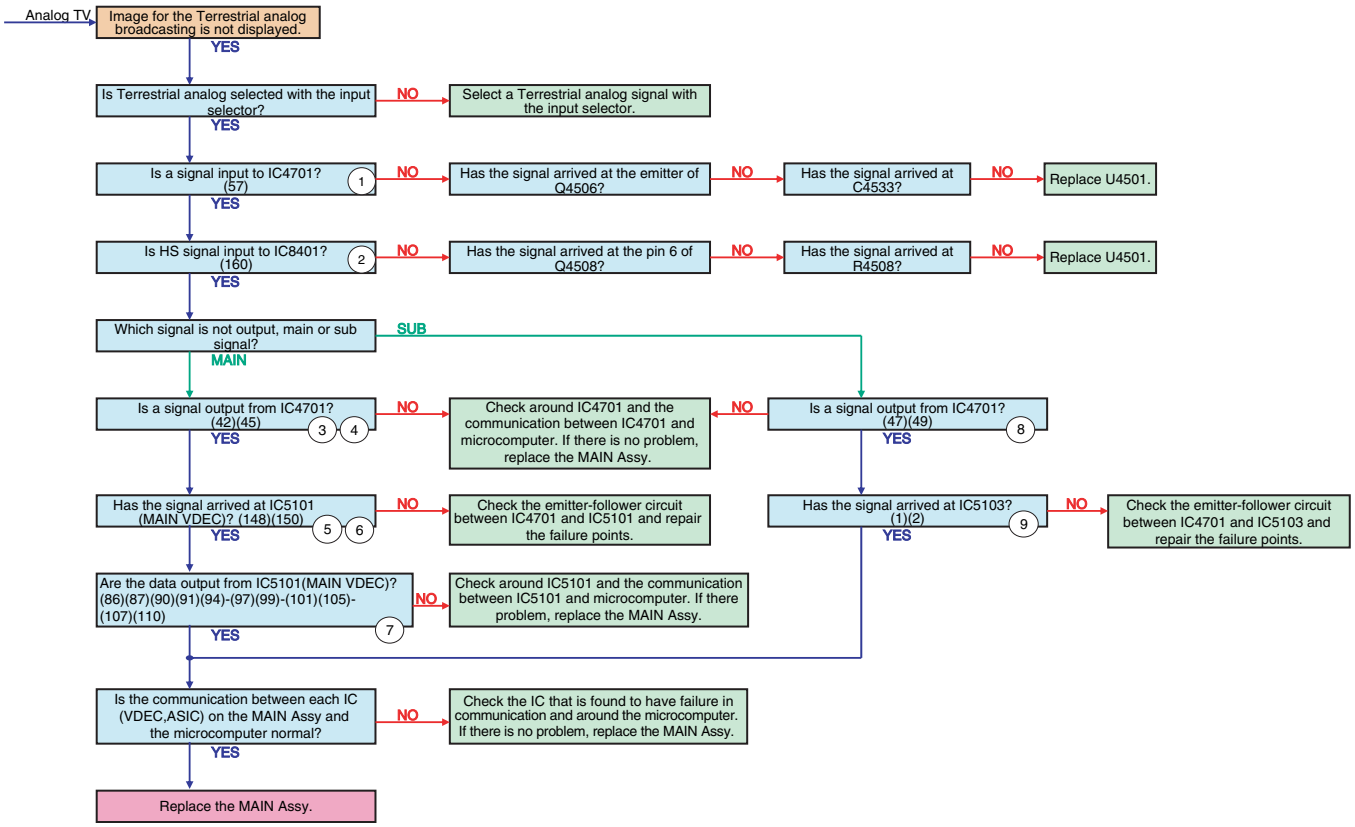

• Waveforms

Analog tuner PAL Color Bar input

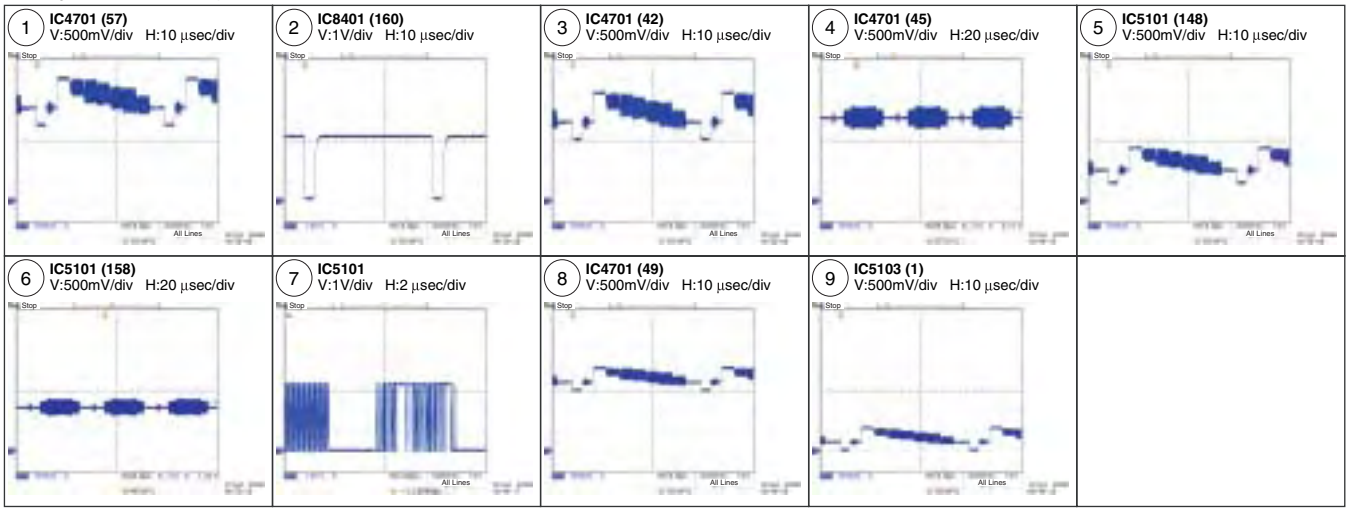

Flowchart of Failure Analysis for The Video-system Assy

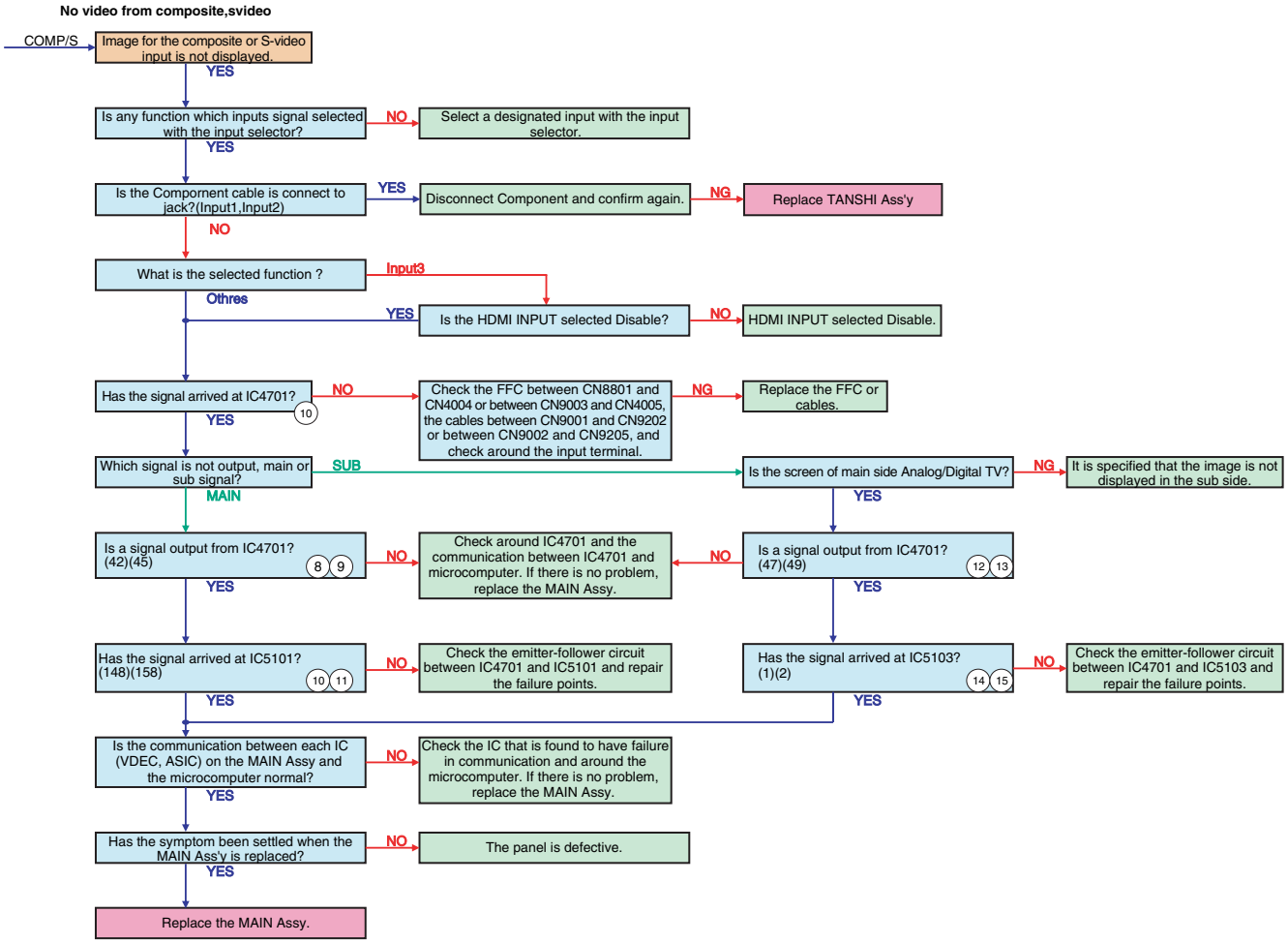

• Waveforms

Composite or S terminal PAL Color Bar input

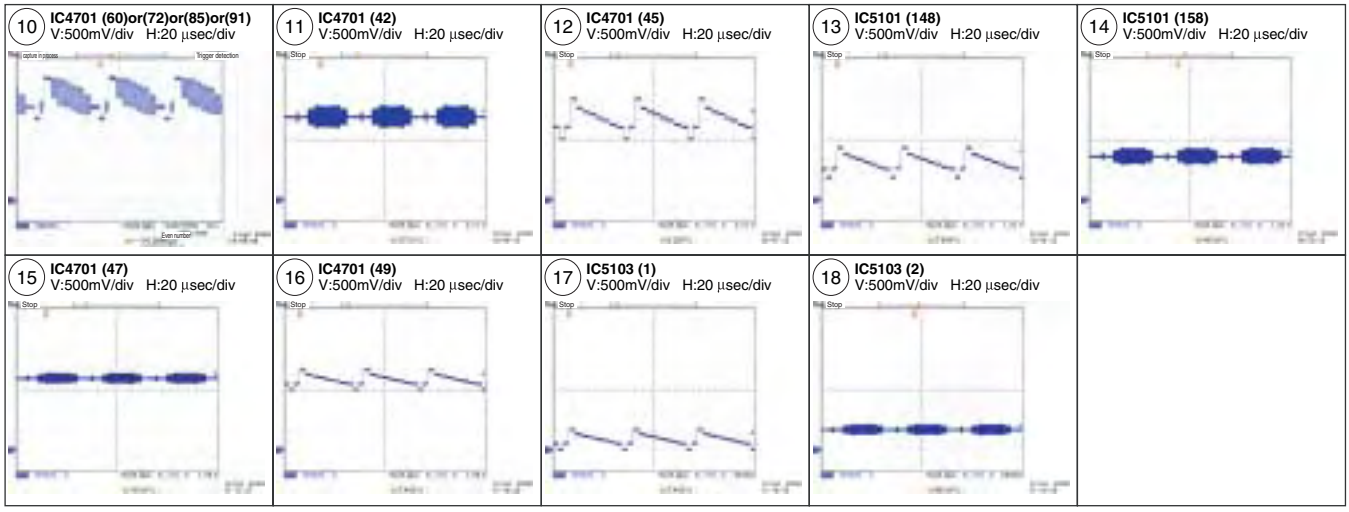

Flowchart of Failure Analysis for The Video-system Assy

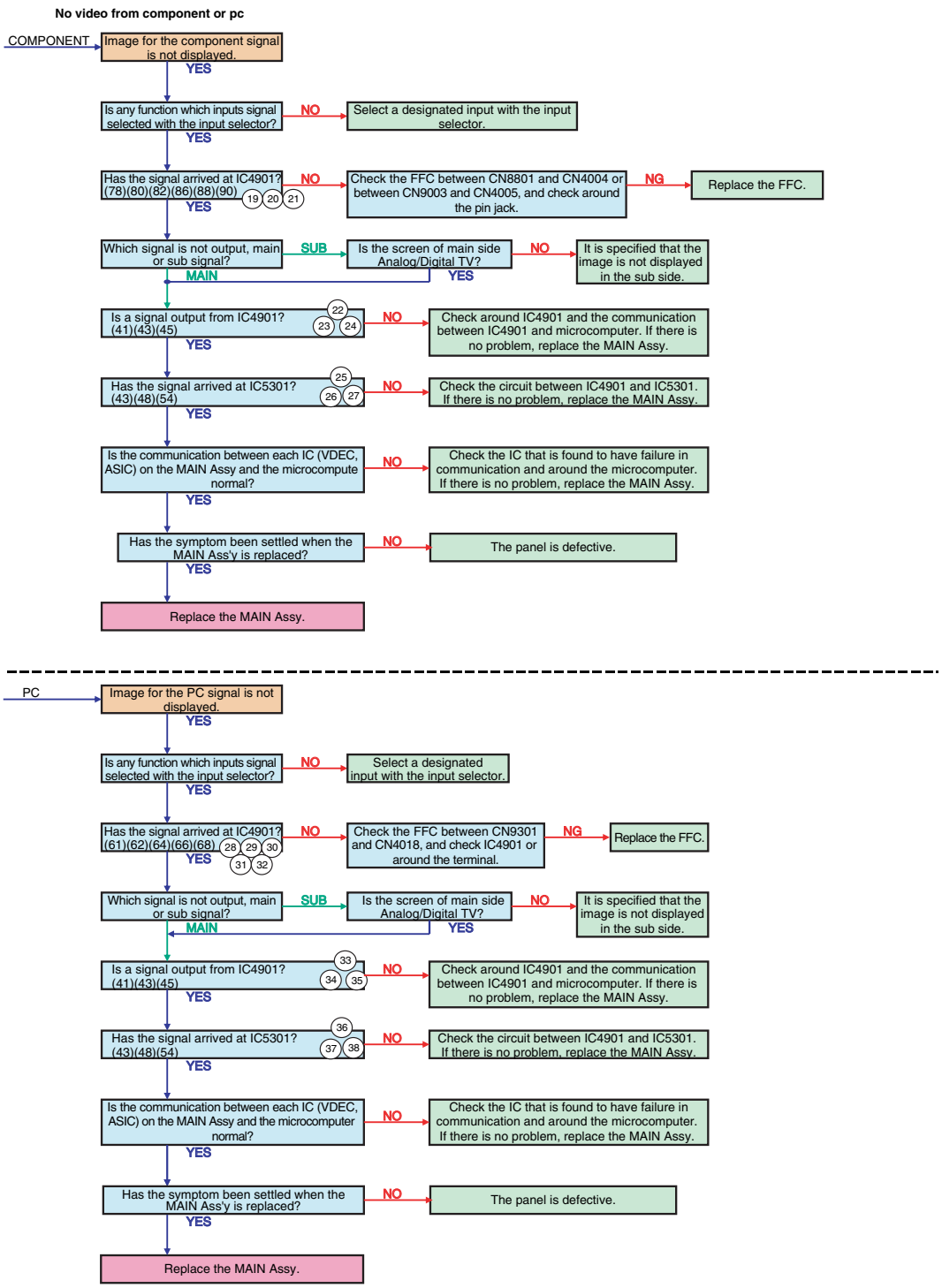

• Waveforms

Component 1080i Color Bar input

19 **IC4901 (78)or(86)** V:500mV/div H:10 µsec/div

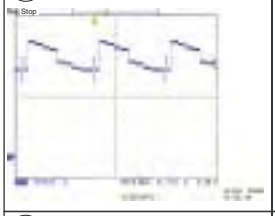

20 **IC4901 (80)or(88)** V:500mV/div H:10 µsec/div

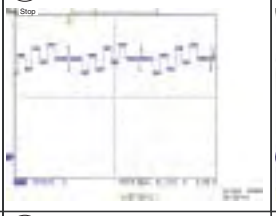

21 **IC4901 (82)or(90)** V:500mV/div H:10 µsec/div

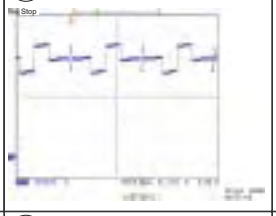

22 **IC4901 (41)** V:500mV/div H:10 µsec/div

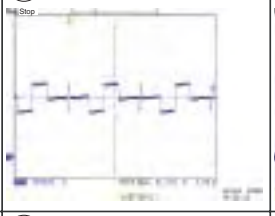

23 **IC4901 (43)** V:500mV/div H:10 µsec/div

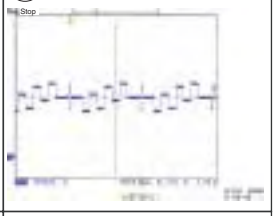

24 **IC4901 (45)** V:500mV/div H:10 µsec/div

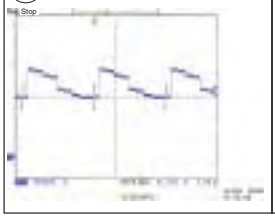

25 **IC5301 (43)** V:500mV/div H:10 µsec/div

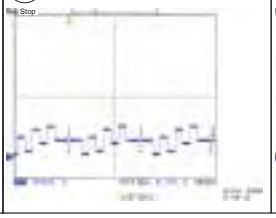

26 **IC5301 (48)** V:500mV/div H:10 µsec/div

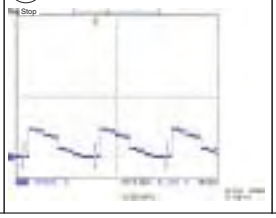

27 **IC5301 (54)** V:500mV/div H:10 µsec/div

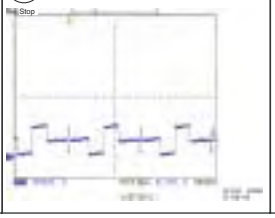

PC XGA/60Hz Color Bar input

28 **IC4901 (61)** V:1V/div H:2msec/div

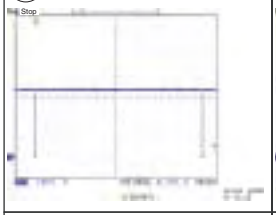

29 **IC4901 (62)** V:1V/div H:10 µsec/div

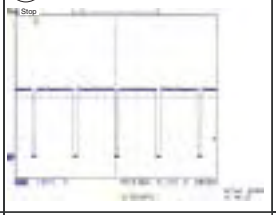

30 **IC4901 (64)** V:500mV/div H:10 µsec/div

31 **IC4901 (66)** V:500mV/div H:10 µsec/div

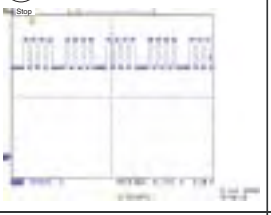

32 **IC4901 (68)** V:500mV/div H:10 µsec/div

33 **IC4901 (41)** V:500mV/div H:10 µsec/div

34 **IC4901 (43)** V:500mV/div H:10 µsec/div

35 **IC4901 (45)** V:500mV/div H:10 µsec/div

36 **IC5301 (43)** V:500mV/div H:10 µsec/div

37 **IC5301 (48)** V:500mV/div H:10 µsec/div

38 **IC5301 (54)** V:500mV/div H:10 µsec/div

Flowchart of Failure Analysis for The Video-system Assy

No monitor output

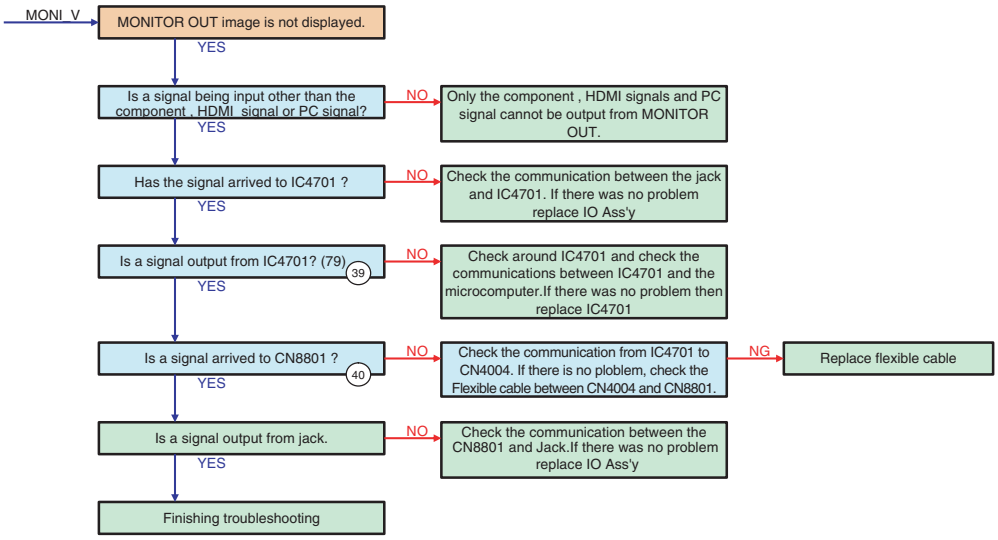

*Input image is a color bar in all cases

• Waveforms

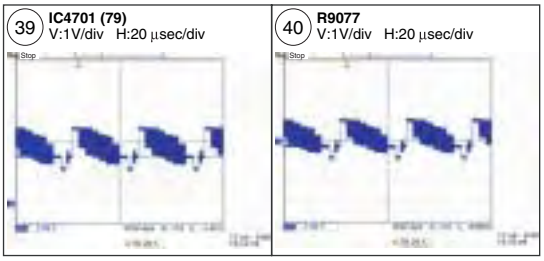

Flowchart of Failure Analysis for The Video-system Assy

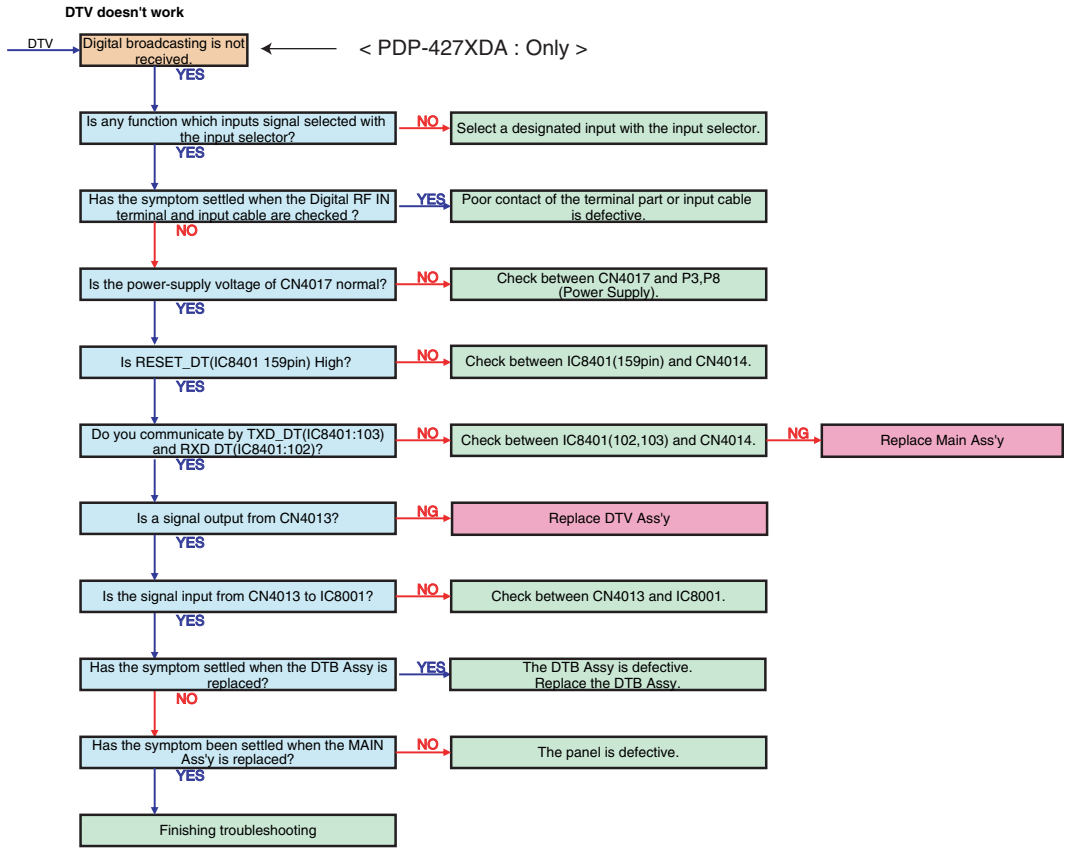

Flowchart of Failure Analysis for The Video-system Assy

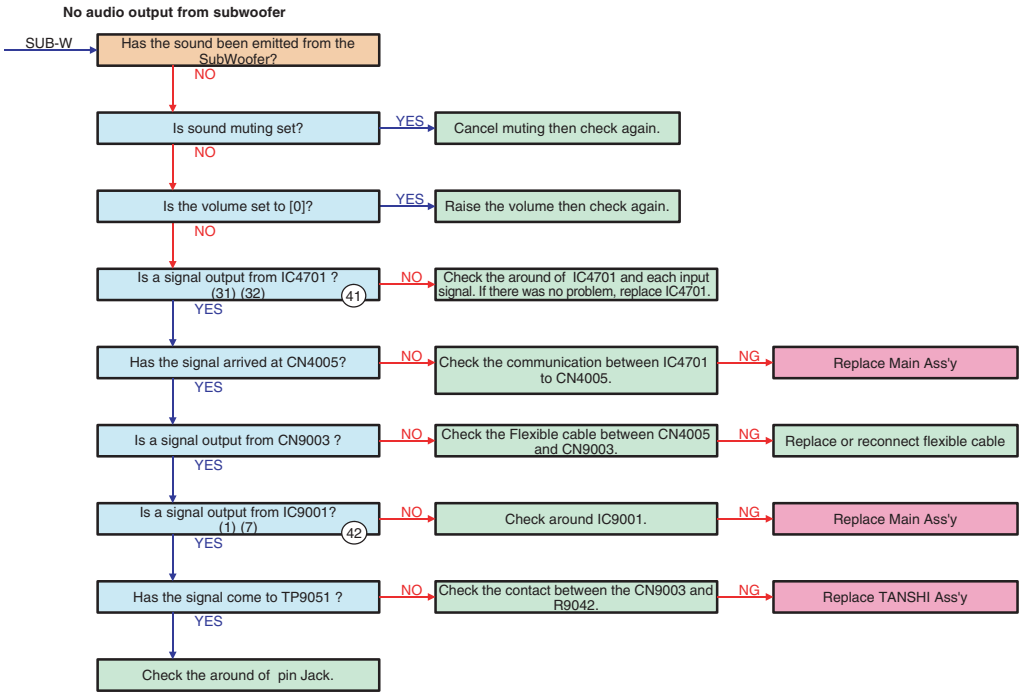

*100Hz input. Sound volume is fixed to 25.

• Waveforms

41

IC4701 (31)(32)AC-SUBWOO
V:200mV/div H:4msec/div

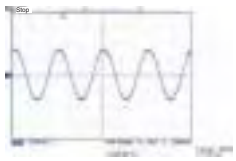

IC4701 (31)(32)DC-SUBWOO

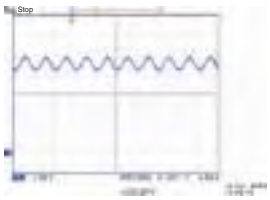

42

IC4704 (1)(7)AC-SUBWOO
V:200mV/div H:4msec/div

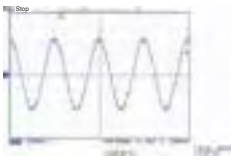

IC4704 (1)(7)DC-SUBWOO

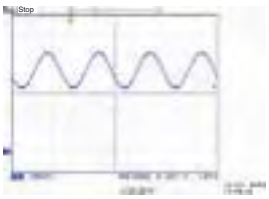

4.1.2 FLOWCHART OF FAILURE ANALYSIS FOR THE AUDIO SYSTEM

Flowchart of Failure Analysis for The Audio-system Assy

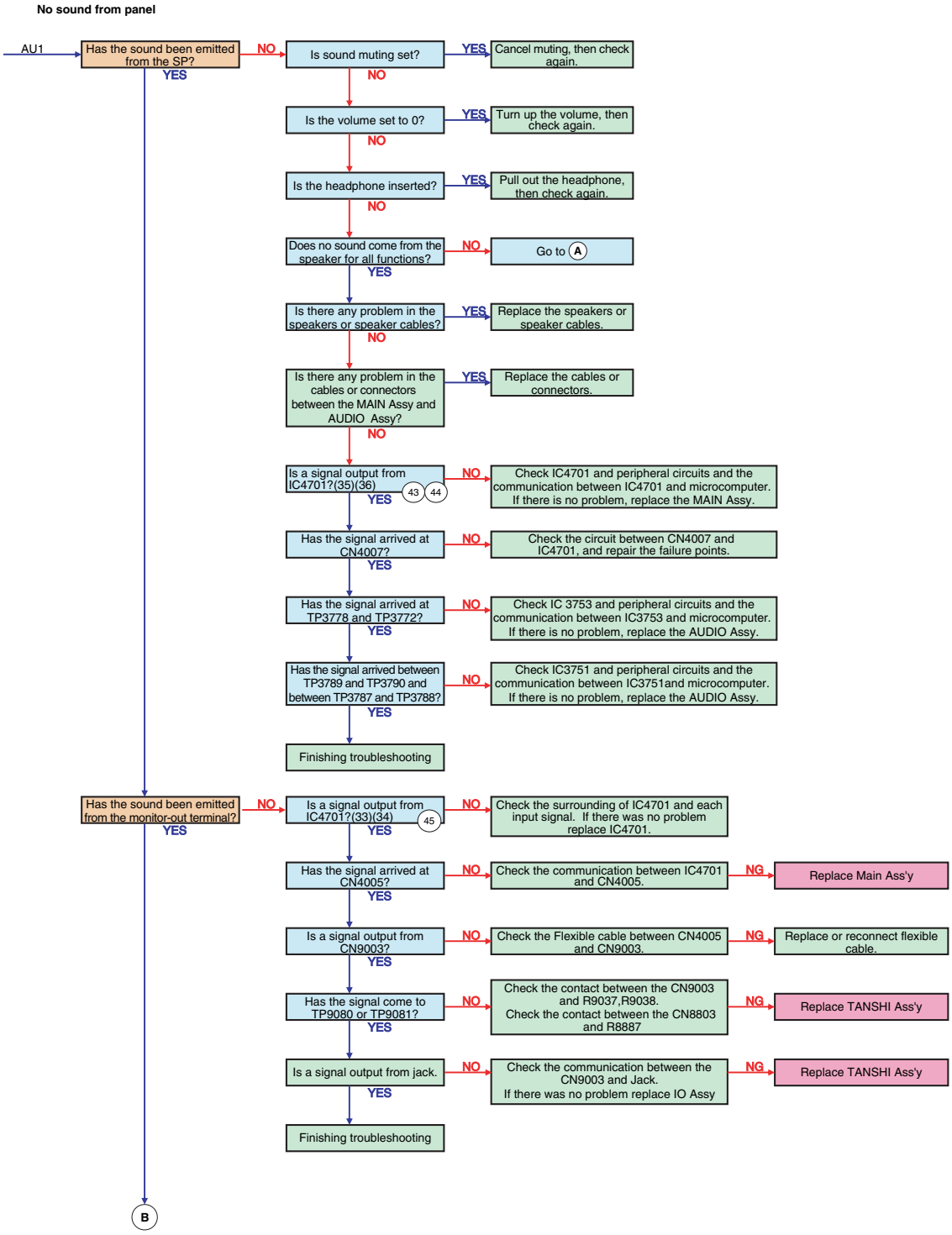

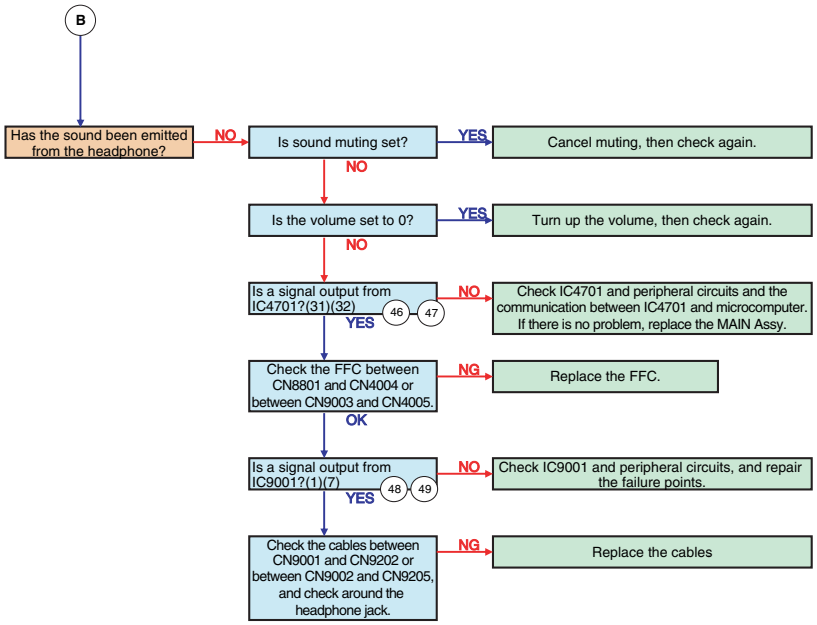

• Waveforms

L/R 1kHz input

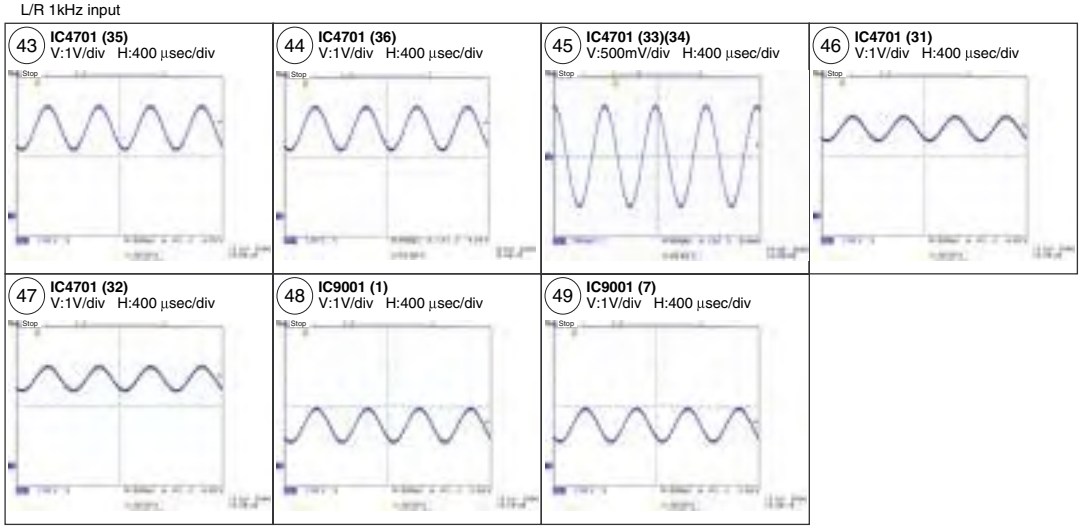

Flowchart of Failure Analysis for The Audio-system Assy

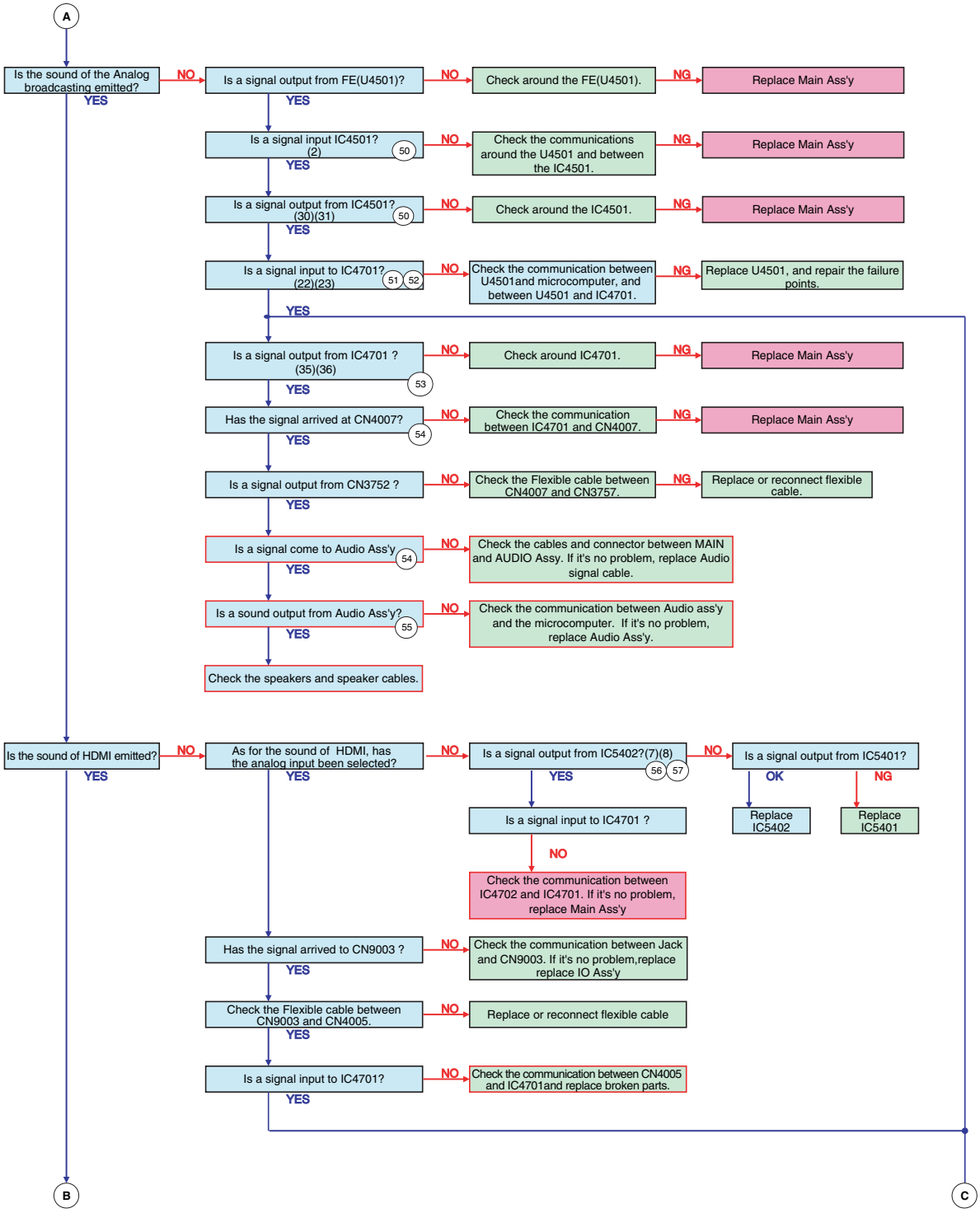

Flowchart of Failure Analysis for The Audio-system Assy

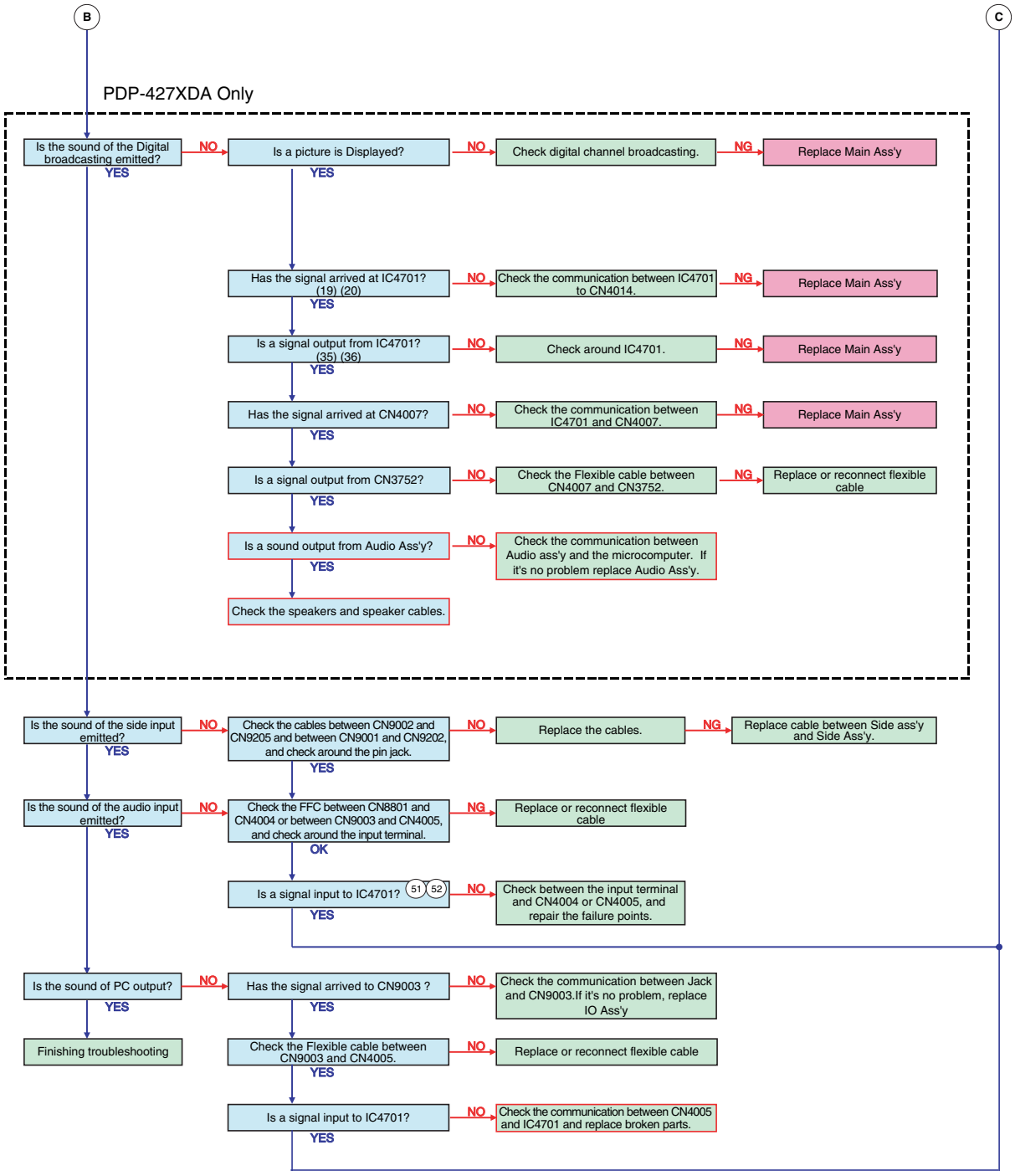

• Waveforms

L/R 1kHz input

50 **IC4501 (2)(30)(31)**
V:200mV/div H:400 µsec/div

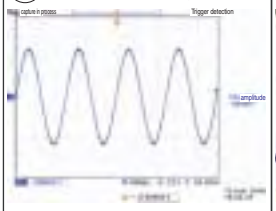

51 **IC4701 (22)**
V:1V/div H:400 µsec/div

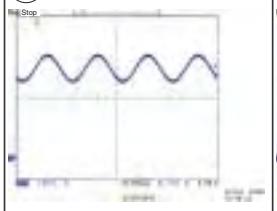

52 **IC4701 (23)**
V:1V/div H:400 µsec/div

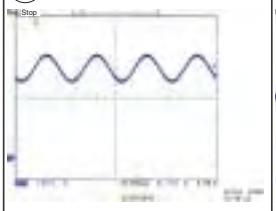

53 **IC4701 (35)(36)**
V:100mV/div H:400 µsec/div

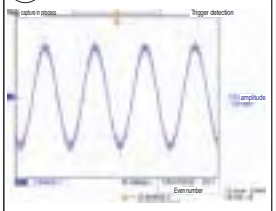

54 **CN4007(3)(5)**
V:100mV/div H:400 µsec/div

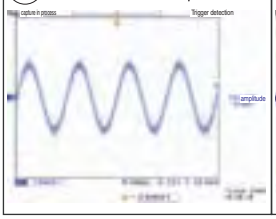

55 **IC4701(35)(36)**
V:100mV/div H:400 µsec/div

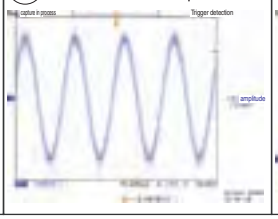

56 **IC5402 (7)**
V:1V/div H:400 µsec/div

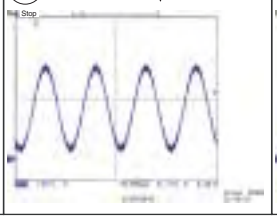

57 **IC5402 (8)**
V:1V/div H:400 µsec/div

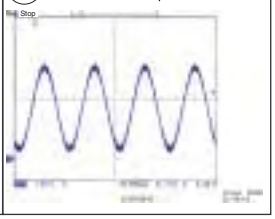

5. ADJUSTMENT

1. At shipment, the unit is adjusted to its best conditions. Normally, it is not necessary to readjust even if an assembly is replaced. If the adjustment is shifted or if it becomes necessary to readjust because of part replacement, etc., perform the adjustment as described below.
2. Any value changed in Service/Factory mode will be stored in memory as soon as it is changed. Before readjustment, take note of the original values for reference in case you need to restore the original settings.
3. Use a stable AC power supply.

5.1 ADJUSTMENT REQUIRED WHEN THE SET IS REPAIRED OR REPLACED

■ When any of the following assemblies is replaced

POWER SUPPLY Unit	Refer to "7.4 HOW TO CLEAR HISTORY DATA". on ARP3391 (PDP-427XD)
DIGITAL Assy	Writing of backup data is required. Refer to the "7.3 BACKUP WHEN THE PANEL UNIT IS ADJUSTED. " on ARP3391 (PDP-427XD)
X MAIN DRIVE Assy	No adjustment required
X SUB DRIVE Assy	No adjustment required
Y MAIN DRIVE Assy	No adjustment required
Y SUB DRIVE Assy	No adjustment required
Service Panel Assy	Refer to "5.3 ADJUSTMENTS WHEN THE SERVICE PANEL ASSY IS REPLACED."
MAIN Assy	Switching to SR+ from RS-232C
SENSOR Assy	Writing of backup data is required. Refer to the "7.3 BACKUP WHEN THE PANEL UNIT IS ADJUSTED. " on ARP3391 (PDP-427XD)
TANSHI Assy	No adjustment required

5.2 ADJUSTMENT REQUIRED WHEN PART IS REPLACED

Notes on replacing parts
For the parts described in the list below, replacement is required for the whole Assy, not only the defective part.
If any part listed below is identified as defective and needs replacement, replace the whole Assy, and make necessary adjustments after replacement.

Reason: The whole Assy must be replaced, because adjustments and data rewriting for the Assy at the level of production line are required.

PCB Assy No.	Function Name	Parts that Require Whole-Assy Replacement		
		Ref No.	Function Name	Part No.
AWW1193	42 DIGITAL Assy	IC3151	Module microcomputer	AGC1011
		IC3401	Sequence IC	PEG239A
		IC3301	Flash memory	AGC1024
		IC3156	EEPROM	BR24L04FJ-W
AWW1140	SENSOR Assy	IC3652	EEPROM	BR24L02FJ-W
AWV2322	MAIN Assy	IC4603	Flash ROM	AGC1020
		IC4701	AV switch	R2S11002AFT
		IC4901	RGB switch	R2S11001FT
		IC5101	MAIN VDEC	UPD64015GM-UEU
		IC5103	SUB VDEC	TVP5150AM1PBS
		IC5301	A/D Converter	AD9985KSTZ-110
		IC5403	EEPROM	BR24L02FJ-W
		IC5404	EEPROM	BR24L02FJ-W
		IC8202	Flash ROM	AGC1019
		IC8301	Flash UCOM	AGC1016
		IC8402	Flash ROM	AGC1018

POWER SUPPLY Unit	The assembly must be replaced as a unit, and no part replacement is allowed.
MAIN Assy	No adjustment is required after replacement of parts other than those mentioned above.
DIGITAL Assy	No adjustment is required after replacement of parts other than those mentioned above.
X MAIN DRIVE Assy	No adjustment is required after replacement of parts other than those shown in the following page.
X SUB DRIVE Assy	No adjustment required
Y MAIN DRIVE Assy	No adjustment is required after replacement of parts other than those shown in the following page.
Y SUB DRIVE Assy	No adjustment required
ADDRESS Assy	No adjustment required
SENSOR Assy	No adjustment is required after replacement of parts other than those mentioned above.
TANSHI Assy	No adjustment required

5.3 ADJUSTMENT WHEN THE SERVICE PANEL ASSY IS REPLACED

When the Panel Assy is replaced with one for service, the following adjustments are required:

■ Adjustments of Vofs voltage and Vyprst voltage

Enter the reference adjustment values for the Vofs voltage and Vyprst voltage that are written on the label attached to the panel for service.
Note: Enter the values, using an RS-232C command or the Factory Menu.

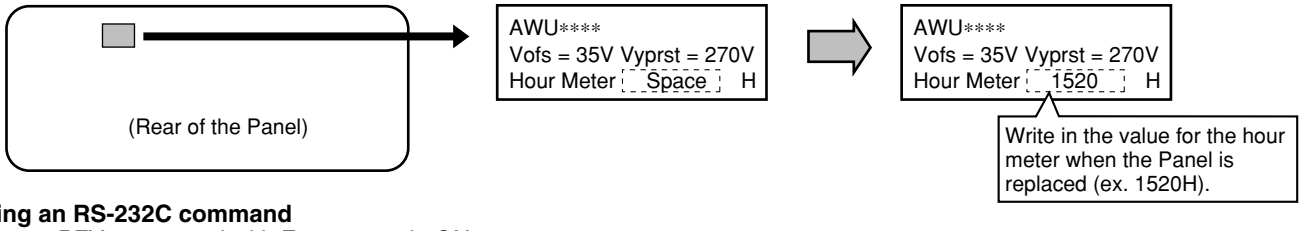

Using an RS-232C command

Enter a "PFY" command with Factory mode ON.
Convert the adjustment voltage values written on the label attached at the rear of the Panel to an input command, referring to the conversion chart. (See the next page.)
• Reference adjustment of the Vofs voltage: Ex. "Vofs = 35" → (Check the conversion chart.) Enter "VOF112."
• Reference adjustment of the Vyprst voltage: Ex. "Vyprst = 270 V" → (Check the conversion chart.) Enter "VRP078."

Using the Factory Menu

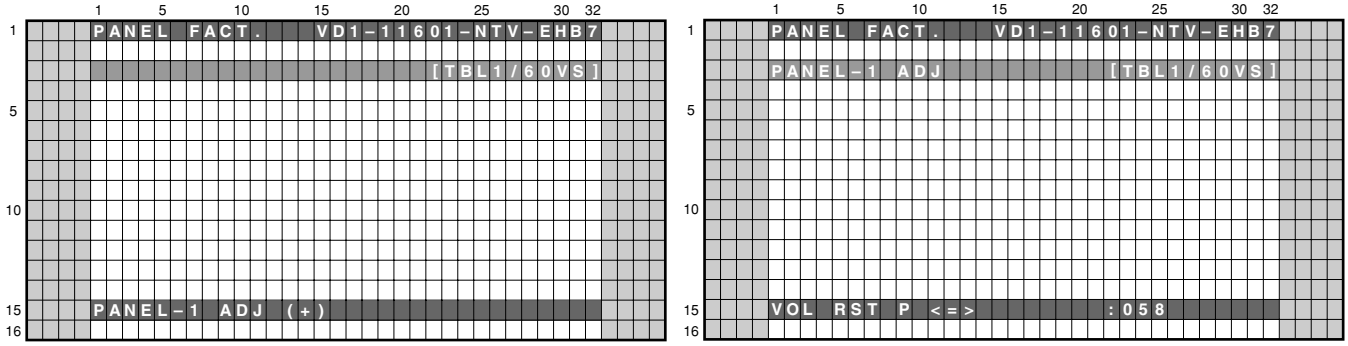

Select the main item "PANEL FACT." by pressing the MUTE key then enter Panel Factory mode by pressing the SET key.
Using the ▲/▼ keys, select "PANEL-1 ADJ" then press the SET key to enter the next lower nested layer.
Select "VOL-OFFSET" or "VOL RST P" then enter a command value converted from the voltage value, using the ◄/► keys.

■ Clearing data on various histories of the Panel, such as those on the hour meter

- It is necessary to clear the data on the hour meter, etc. to match them to the actual driving hours of the Panel.
- It is also necessary to clear the data on SD and PD, because the accumulated power-on time when a shutdown or power-down occurred is recorded.

Note: Clear the values, using an RS-232C command or the Factory Menu.
There are two types of hour meters. Do not take the MTB hour meter for the hour meter.

Using an RS-232C command

To acquire the accumulated power-on time of the product itself, use the "QS2" of RS-232C command.
1. To clear the data on the hour meter (for the Panel) : CHM
2. To clear the data on the pulse meter : CPM
3. To clear the data on the SD history : CSD
4. To clear the data on the PD history : CPD

Using the Factory Menu

See "7.4 HOW TO CLEAR HISTORY DATA."
(Refor to Service mamual "ARP3391")

■ Conversion charts for electronic VRs (Vprst/Vofs)

Vprst [V]	Setting value [STEP]
222	000
223	002
224	004
225	006
226	009
227	011
228	013
229	016
230	018
231	020
232	022
233	025
234	027
235	029
236	032
237	034
238	036
239	039
240	041
241	043
242	045
243	048
244	050
245	052
246	055
247	057
248	059
249	062
250	064
251	066
252	069
253	071
254	073
255	075
256	078
257	080
258	082
259	085
260	087
261	089
262	092
263	094
264	096
265	098

Vprst [V]	Setting value [STEP]
266	101
267	103
268	105
269	108
270	110
271	112
272	115
273	117
274	119
275	121
276	124
277	126
278	128
279	131
280	133
281	135
282	138
283	140
284	142
285	144
286	147
287	149
288	151
289	154
290	156
291	158
292	161
293	163
294	165
295	168
296	170
297	172
298	174
299	177
300	179
301	181
302	184
303	186
304	188
305	191
306	193
307	195
308	197
309	200

Vprst [V]	Setting value [STEP]
310	202
311	204
312	207
313	209
314	211
315	214
316	216
317	218
318	220
319	223
320	225
321	227
322	230
323	232
324	234
325	237
326	239
327	241
328	243
329	246
330	248
331	250
332	253
333	255

Vofs [V]	Setting value [STEP]
14	000
15	005
16	010
17	015
18	021
19	027
20	032
21	037
22	043
23	048
24	053
25	059
26	064
27	069
28	075
29	080
30	085
31	091
32	096
33	101
34	107
35	112
36	118
37	123
38	128
39	134
40	139
41	144
42	150
43	155
44	160
45	166
46	171
47	176
48	182
49	187
50	192
51	198
52	203
53	209
54	214
55	219
56	225
57	230

Vofs [V]	Setting value [STEP]
58	235
59	241
60	246
61	251
62	255

6. RS-232C
6.1 OUTLINE OF RS-232C COMMAND
6.1.1 USING RS-232C COMMANDS

For the PDP-427XG and PDP-427XDA Plasma Displays, the circuitry is structured as shown in the diagram below to support the SR+ system. Controlling with either the SR+ system or RS-232C commands can be selected.
As the SR+ system is selected at shipment, to control with RS-232C commands in servicing it is necessary to switch the paths. After servicing, be sure to return the setting to the SR+ system.

■ Rough diagram of switching between SR+ and RS-232C

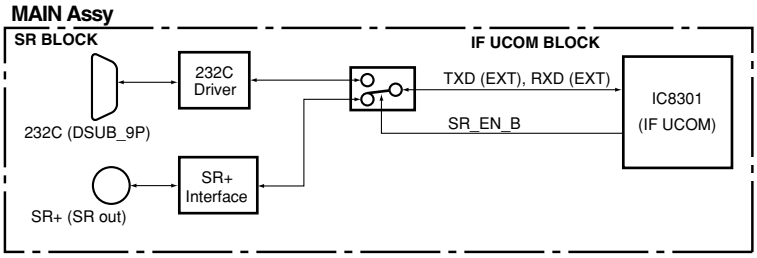

■ How to switch SR+/RS-232C ?

There are "How to switch SR+/RS-232C by remote control in the Standby Mode" and "How to switch SR+/RS-232C by remote control in the INTEGRATOR MENU" as a Method

① To select SR+/RS-232C by remote control in Standby Mode.
- During Standby mode, hold the keys other than the [POWER] key on the remote control, the following operation is done within 10 seconds.

To select from SR+ to RS-232C/To select from RS-232C to SR+.
- During standby mode, hold the [VOLUME+ (or -)] key on the remote control unit pressed for 3 to 10 seconds. →Then within 3 seconds after the key is released, hold the [2-screen] key released, use the [SET (ENTER)] key on the remote control unit to set to RS-232C (the baud rate last selected is chosen) or the [HOME MENU] key to set to SR+.
- During IF Standby mode (once 10 seconds or more has passed after the LED goes dark during communication), the first keypress may not be accepted. In such a case, for a key operation, first press any key other than the [POWER] key and [CH] keys, then the desired key.
- At the switch SR+/RS-232C, the LED will be blinked on the fixed time.

② To select SR+/RS-232C in the INTEGRATOR MENU.
- How to enter INTEGRATOR MENU.
  During standby mode, press the [Home Menu] key, and then press the [POWER] key within 3 seconds. During factory mode, hold the [INTEGRATOR] key.
- In INTEGRATOR MENU, there is a OSD where SR+ (or RS-232C) is turned on/off, and it switches on the screen.

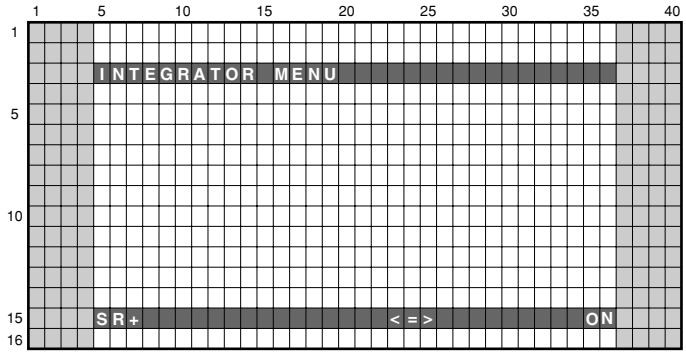

6.2 OUTLINE OF EACH COMMAND

6.2.1 QS6

Induce it peculiar, individual information is acquired.

Command Format	Effective Operation Modes	Function	Remarks
[QS6]	Every time	Output of status	

• AU Model

Order	Part	Data Arrangement	Data Length	Remarks
00	–	Received Command name	3 byte	QS6
01		DTB version	4 byte	
02		Reserved	8 byte	
03		TELE-TEXT version	60 byte	
04		USER PASSWORD	4 byte	
05	–	Check Sum	2 byte	

• GE Model

Order	Part	Data Arrangement	Data Length	Remarks
00	–	Received Command name	3 byte	QS6
01		Reserved	12 byte	
02		TELE-TEXT version	60 byte	
03		USER PASSWORD	4 byte	
04		Check Sum	2 byte	

• CH Model

Order	Part	Data Arrangement	Data Length	Remarks
00	–	Received Command name	3 byte	QS6
01		Reserved	72 byte	
02		USER PASSWORD	4 byte	
03		Check Sum	2 byte	

7. GENERAL INFORMATION

7.1 LED INFORMATION

• LED Pattern

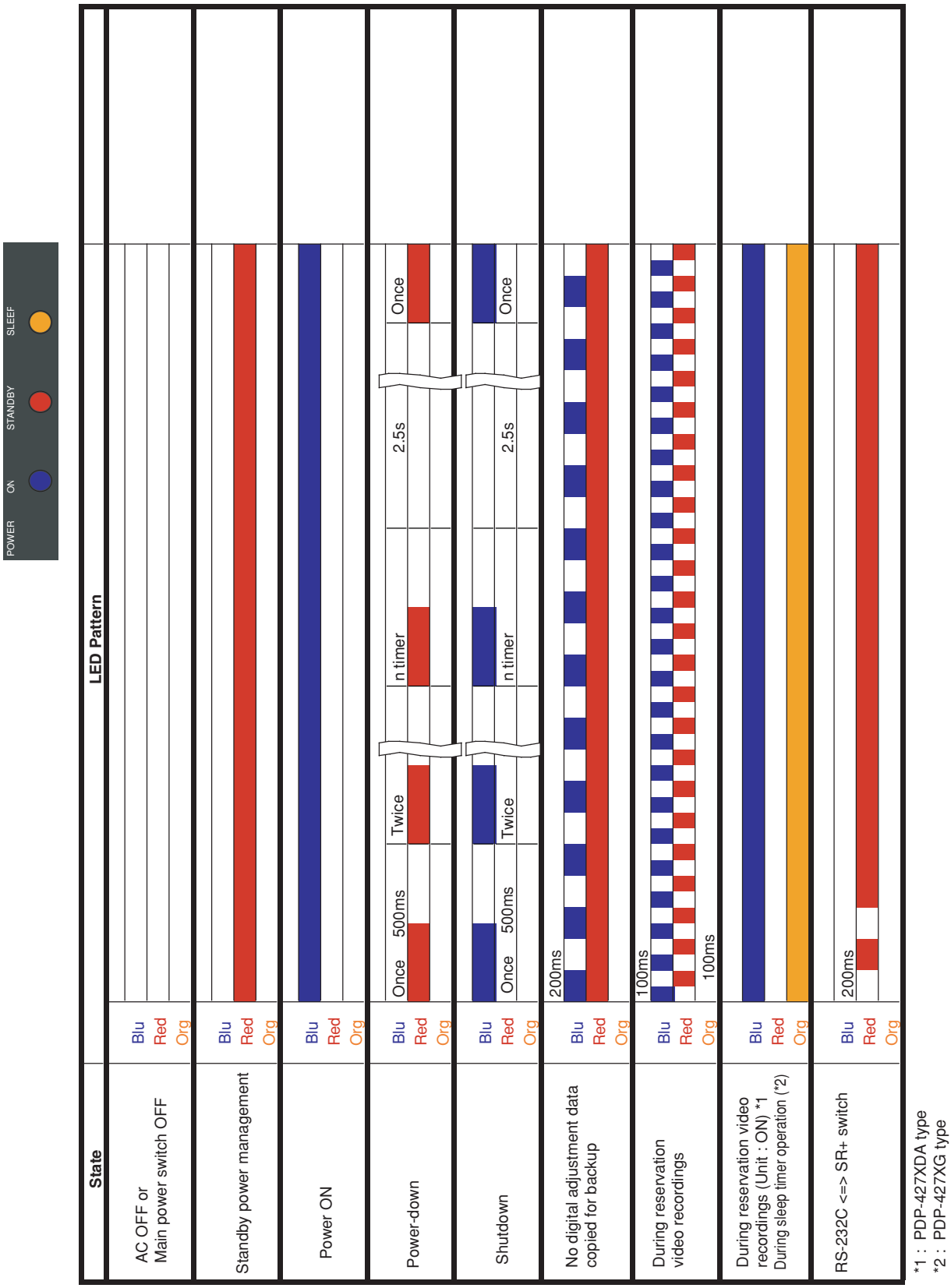

*1 : PDP-427XDA type
*2 : PDP-427XG type

7.2 GENERAL INFORMATION (PDP-427XDA Only)

Display Method of Signal Level, Quality, and BER Information Screen

MANUAL SCAN screen has these information.

Operation : Manual Scan
HOMEMENU => Setup => DTV Setup => Installation => Input Password =>Manual Scan

Sinal Level
Quality
"Signal Level" and "Quality" are displayed on Manual Scan screen.
These level indicater are laugh standard.
Please use them as reference

BER
While displaying Manual Scan screen, please press the following keys within 5 seconds.
Operation : BER
1. Green Key
2. I-II Key
3. Enter Key

This BER function is effective until turning off power.

Fig : Manual Scan screen

7.3 SPECIFICATION

Specifications

Item			42” Plasma Display, model: PDP-427XDA
Number of pixels			1024 x 768 pixels
Audio amplifier			13 W + 13 W (1 kHz, 10 %, 8 Ω)
Speakers			Woofer: 4.8 cm x 13 cm cone type Tweeter: 2.5 cm semidome type
Surround System			SRS/FOCUS/TruBass
Power Requirements			240 V AC, 50 Hz, 295 W (0.4 W Standby)
Dimensions			1040 mm (W) x 679 mm (H) x 115 mm (D)
Weight			29.7 kg (65.5 lbs.)
Colour System	Analogue		PAL/SECAM/NTSC/4.43 NTSC/PAL-M/PAL-N
	Digital		PAL
TV Function (Analogue)	Receiving System		PAL: B/G, D/K, I SECAM: B/G, D/K NTSC: M/ N
	Tuner	VHF/UHF	44.25 MHz to 863.25 MHz
		CATV	Hyper-band, S1 ch to S41 ch
	Auto Channel Preset		99 ch, Auto Preset
	Audio multiplex		NICAM/A2/BTSC System
TV Function (Digital)	Receiving System		DVB-T (2K/8K COFDM)
	Tuner	VHF/UHF	VHF Band (104.5 MHz to 226.5 MHz) and UHF Band (526.5 MHz to 816.5 MHz)
	Auto Channel Preset		999 ch, Auto Preset, Auto Label
	STEREO		MPEG layer I/II, Dolby Digital
Terminals	Rear	INPUT 1	COMPONENT VIDEO in, S-VIDEO in, AV in
		INPUT2	COMPONENT VIDEO in, S-VIDEO in, AV in
		INPUT3	S-VIDEO in, AV in, HDMI in
		INPUT4	HDMI in
		PC INPUT	Analogue RGB in, AUDIO (STEREO) in
		CONTROL OUT	1
		MONITOR OUT	AV out
		SUBWOOFER	Variable
		DIGITAL OUT	Digital audio output (Optical)
		Antenna	75 Ω Din Type for VHF/UHF in (Analogue) 75 Ω Din Type for VHF/UHF in (Digital)
	Side	INPUT 5	S-VIDEO, AV in
		PHONESOUTPUT	16 Ω to 32 Ω recommended

8. SERVICE FACTORY MODE

8.1 FACTORY HIERARCHICAL TABLE

Large Item	Middle Item	Small Item	Variable / Adjustment Range	Remarks
8.2.1 INFORMATION				
	8.2.1.1 VERSION (1)			
	8.2.1.2 VERSION (2)			
	8.2.1.3 MAIN NG	CLEAR <=>	OFF <=> ON	
	8.2.1.4 TEMPERATURE			
	8.2.1.5 HOUR METER			
	8.2.1.6 HDMI SIGNAL INFO 1			
	8.2.1.7 HDMI SIGNAL INFO 2			
	8.2.1.8 VDEC SIGNAL INFO			
8.2.2 PANEL FACTORY (+)				
	8.2.2.1 PANEL INFORMATION			
	8.2.2.2 PANEL WORKS			
	8.2.2.3 POWER DOWN			
	8.2.2.4 SHUT DOWN			
	8.2.2.5 PANEL-1 ADJ (+)	X-SUS B <=>	120 to 136	Equivalent to XSB
		Y-SUS B <=>	120 to 136	Equivalent to YSB
		Y-SUSTAIL T1 <=>	120 to 136	Equivalent to YTG
		Y-SUSTAIL T2 <=>	120 to 136	Equivalent to YTB
		Y-SUSTAIL W <=>	120 to 136	Equivalent to YTW
		XY-RST W1 <=>	120 to 136	Equivalent to RSW
		XY-RST W2 <=>	120 to 136	Equivalent to RYW
		VOL SUS <=>	000 to 255	Equivalent to VSU
		VOL OFFSET <=>	000 to 255	Equivalent to VOF
		VOL RST P <=>	000 to 255	Equivalent to VRP
		SUS FREQ. <=>	MODE 1 to MODE 8	Equivalent to SFR
	8.2.2.6 PANEL-2 ADJ (+)	R-HIGH <=>	000 to 511	Equivalent to PRH
		G-HIGH <=>	000 to 511	Equivalent to PGH
		B-HIGH <=>	000 to 511	Equivalent to PBH
		R-LOW <=>	000 to 999	Equivalent to PRL
		G-LOW <=>	000 to 999	Equivalent to PGL
		B-LOW <=>	000 to 999	Equivalent to PBL
		ABL <=>	000 to 255	Equivalent to ABL
	8.2.2.7 PANEL REVISE (+)	R-LEVEL <=>	LV-0 to LV-7	Equivalent to RRL
		G-LEVEL <=>	LV-0 to LV-7	Equivalent to RGL
		B-LEVEL <=>	LV-0 to LV-7	Equivalent to RBL
	8.2.2.8 ETC. (+)	BACKUP DATA <=>	NO OPRT <=> TRANSFER or ERR	Equivalent to BCP
		DIGITAL EEPROM <=>	NO OPRT <=> DELETE/REPAIR	Equivalent to FAJ/UAJ
		PD INFO. <=>	NO OPRT <=> CLEAR	Equivalent to CPD
		SD INFO. <=>	NO OPRT <=> CLEAR	Equivalent to CSD
		HR-MTR INFO. <=>	NO OPRT <=> CLEAR	Equivalent to CHM
		PM/B1-B5 <=>	NO OPRT <=> CLEAR	Equivalent to CPM
		P COUNT INFO. <=>	NO OPRT <=> CLEAR	Equivalent to CPC
		MAX TEMP. <=>	NO OPRT <=> CLEAR	Equivalent to CMT
	8.2.2.9 RASTER MASK SETUP (+)	MASK OFF	<=> 48V <=> 50V <=> 60V <=> 60P <=> 70P <=> 72V <=> 75V <=>	Equivalent to MKS+S00
		RST MASK 01 <=>		Equivalent to MKS+S51
		• • •		• • •
		RST MASK 24 <=>		Equivalent to MKS+S74
	8.2.2.10 PATTEN MASK SETUP (+)	MASK OFF	<=> 48V <=> 50V <=> 60V <=> 60P <=> 70P <=> 72V <=> 75V <=>	Equivalent to MKS+S00
		PTN MASK 01 <=>		Equivalent to MKS+S01
		• • •		• • •
		PTN MASK 39 <=>		Equivalent to MKS+S39
	8.2.2.11 COMBI MASK SETUP (+)	MASK OFF	<=> 48V <=> 50V <=> 60V <=> 60P <=> 70P <=> 72V <=> 75V <=>	Equivalent to MKC+S00
		CMB MASK 01 <=>		Equivalent to MKC+S01
		• • •		• • •
		CMB MASK 10 <=>		Equivalent to MKC+S10
8.2.3 OPTION				
	8.2.3.1 EDID WRITE MODE <=>			Exclusively used for production line
	8.2.3.2 CH PRESET <=>			
8.2.4 INITIALIZE				
	8.2.4.1 SYNC DET (+)			for the technical analysis
	8.2.4.2 SG MODE <=>		SG OFF <=> • • •	
	8.2.4.3 SG PATTERN <=>		SG PATTERN <=> COLOR BAR 1 • • •	
	8.2.4.4 SIDE MASK LEVEL (+)	R MASK LEVEL <=>	000 to 255	
		G MASK LEVEL <=>	000 to 255	
		B MASK LEVEL <=>	000 to 255	
	8.2.4.5 FINAL SETUP (+)	DATA RESET <=>	OFF <=> ON	
	8.2.4.6 CVT AUTO <=>			Exclusively used for technical analysis (details omitted)
	8.2.4.7 HDMI INTR POSITION (+)	INTR-POS1 (0x75) <=>	000 to 255	
		INTR-POS2 (0x76) <=>	000 to 255	
		INTR-POS3 (0x77) <=>	000 to 255	
		INTR-POS4 (0x78) <=>	000 to 255	

Notes : The marked part is changed.

8.1.1 INDICATIONS IN SERVICE FACTORY MODE

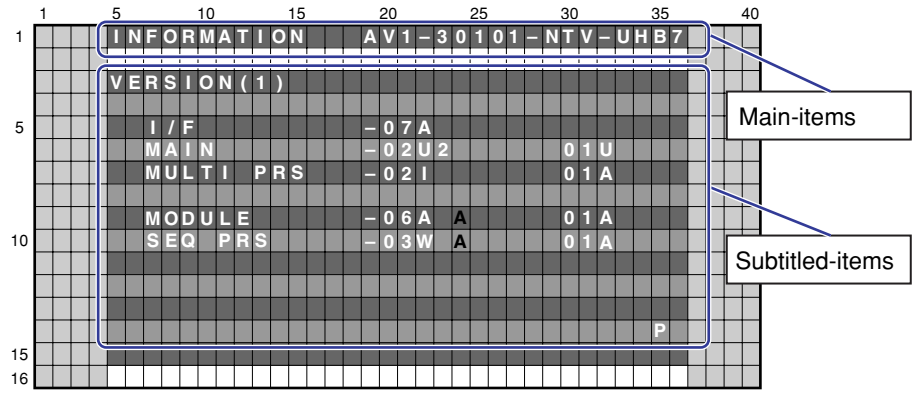

■ Main-item indications

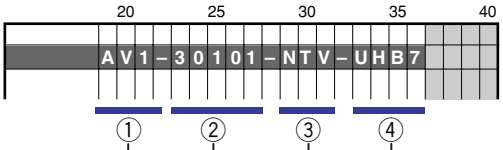

① Input function

Input Functions	OSD
VIDEO 1 to 5	VD 1 to 5
Terrestrial Analog Wave	AIR
Terrestrial Digital Wave	ARD
PC	PC

② SIG mode and Screen size

Note: See SIG-Mode Tables. (See next page.)

③ Color system and Signal type

Color System and Signal Type	OSD1	OSD2
NTSC	NTV	NTS
PAL	PLV	PLS
PAL M	PMV	PMS
PAL N	PNV	PNS
SECAM	SCV	SCS
4.43 NTSC	4NV	4NS
BLACK/WHITE	BWV	BWS
Y/CB/CR	CBR	
Y/PB/PR	PBR	
RGB	RGB	
Digital Video signal	DIG	

Note: OSD1 (Composite input), OSD2 (S-Connector input)

④ Option (Destination, Panel Generation, etc.)

Options	OSD
SX system for Australia (XDA model)	UHB
SX system for General Region (XG model)	GTB
SX system for China (XC model)	CTB

8.2 FACTORY MENU

8.2.1 INFORMATION

● **Operation items**

No.	Function/Display	Context	RS-232C Command
1	VERSION (1)	The software versions for each microcomputer are displayed. (Common part)	QS1
2	VERSION (2)	The Flash memory versions for each device are displayed. (Individual part)	QS6
3	MAIN NG	The Shutdown Message ID/Event Times in Main Microcomputer are displayed.	QNG
4	TEMPERATURE	The Temperature/FAN rotating status in Main Microcomputer are displayed.	QMT
5	HOUR METER	The HOUR METER/P-COUNT information are displayed.	QIP
6	HDMI SIGNAL INFO 1	The Information of HDMI information files are displayed.	–
7	HDMI SIGNAL INFO 2		
8	VDEC SIGNAL INFO	Display the Signal Information on VDEC.	–

8.2.1.1 VERSION (1)

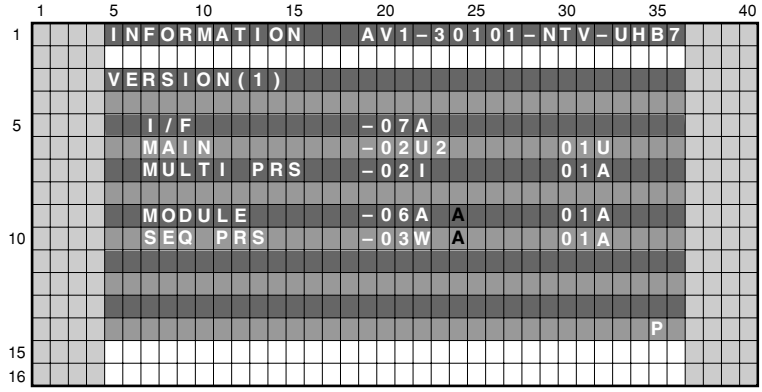

Microcomputer	Item Name	Display Example (Execution program block)	Display Example (Boot block)
I/F microcomputer	I/F	-07A	–
Main microcomputer	MAIN	-02U2	01U
Multi processor	MULTI PRG	-02I	01A
Module microcomputer	MODULE	-06A_A	01A
Sequence processor	SEQ PRS	-03W_A	01A

Note: In the 29-32 rows, the Boot version information on each device is displayed.
In the 19-24 rows, the version of the execution program is displayed.
At the position "14x35", The Past/Highly effective panel distinction information is displayed.

8.2.1.2 VERSION (2)

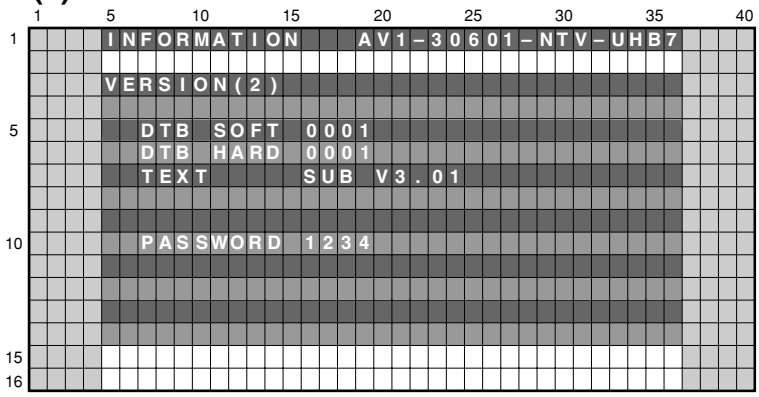

XDA-Model

Flash Device	Item Name	Display Example
DTB Software Version	DTB SOFT	0001
DTB Hardware Version	DTB HARD	0001
TEL TEXT	TEXT	SUB V3.01
User Password	PASSWORD	1234

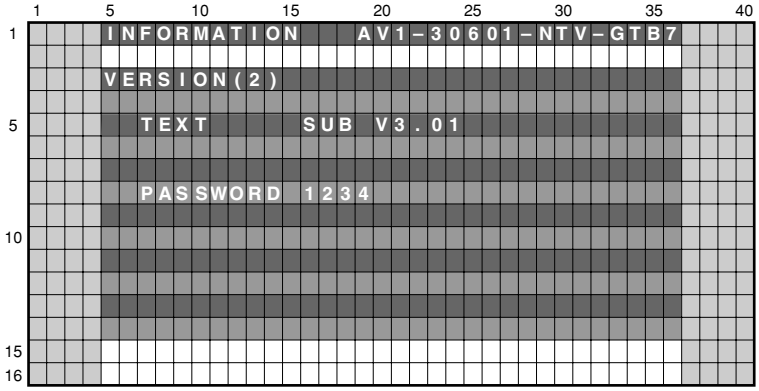

XG-Model

Flash Device	Item Name	Display Example
TeleTEXT	TEXT	SUB V3.01
User Password	PASSWORD	1234

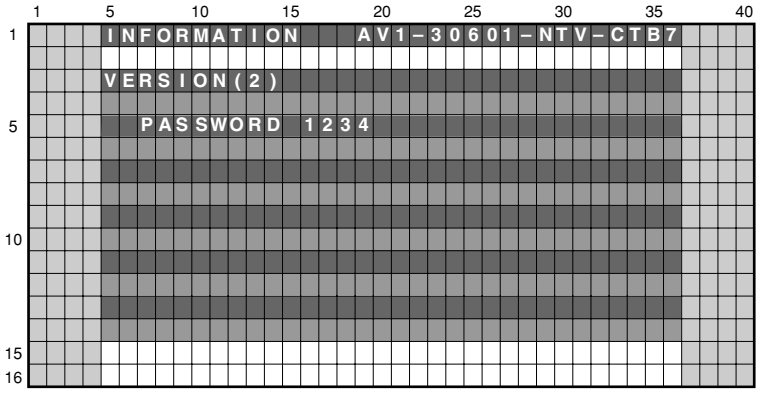

XC-Model

Flash Device	Item Name	Display Example
User Password	PASSWORD	1234

8.2.1.3 MAIN NG

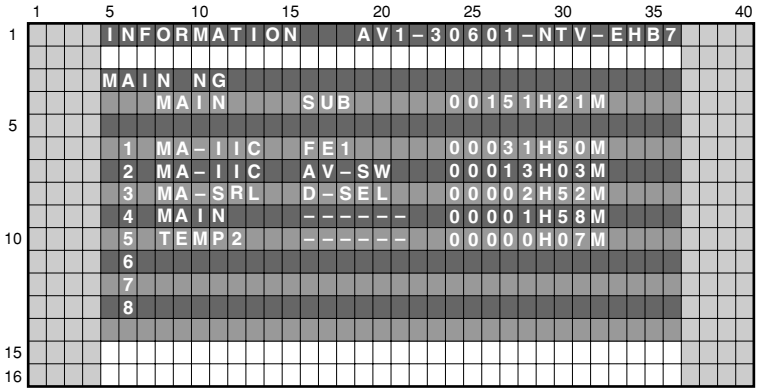

MTB side's Shutdown NG information

OSD: MAIN	OSD: SUB	Cause of Shutdown
AUDIO	----	
MODULE	----	Failure of communication to Module microcomputer.
MA-SRL		3-wire Serial Communication of Main microcomputer.
	IF	Communication failure of IF microcomputer
	MULTI1	Multi Processor communication failure (MULIT1)
	I/P	Multi Processor communication failure (I/P)
	D-SEL	Multi Processor communication failure (D-SEL)
MA-IIC		IIC Communication failure of Main microcomputer
	FE1	Analog Tuner 1 (Front End 1)
	MPX	MPX
	AUDIO	
	AV-SW	AV Switch
	RGB-SW	RGB Switch
	M-VDEC	Main VDEC
	S-VDEC	Sub VDEC
	ADC	AD/PLL
	HDMI	HDMI
	TX-COM	TX communication failure
	TX-BSY	TX Busy
	MA-EEP	64k EEPROM
MAIN		Communication failure of Main microcomputer &Unknown Error
FAN		Fan stopped
TEMP2		Abnormally high temperature at MTB.
DTUNER*		Failure of Digital Tuner
	PS/RST	Failure to DTB Starting
	RETRY	–
MA-PWR	M-DCDC	Abnormally in RST2 of MTB. (power decrease of DC-DC converter)
	RELAY	–

Note) DTUNER : XDA model only

8.2.1.4 TEMPERATURE

A present temperature and the FAN rotation are displayed.
If either [⬅] key or [➡] key is pressed, the display data is refreshed.

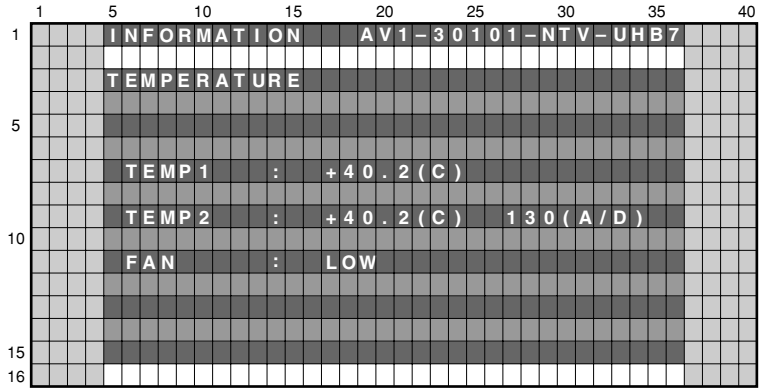

• Display/Meaning

TEMP1 : The temperature of the sensor on the panel side is displayed by the centigrade.
TEMP2 : The temperature conversion display is done with 10bit the A/D input value of Main uCON 76 pin (AN0). It is displayed by both the centigrade (C) and 8bit A/D value.
(Remark:When temperature (C) of the sensor becomes more than a specified temperature, the shutdown start of processing.)
FAN : The value of the Fan rotating state is displayed.
STOP : stopped, LOW: slow speed, HIGH: high speed.

8.2.1.5 HOUR METER

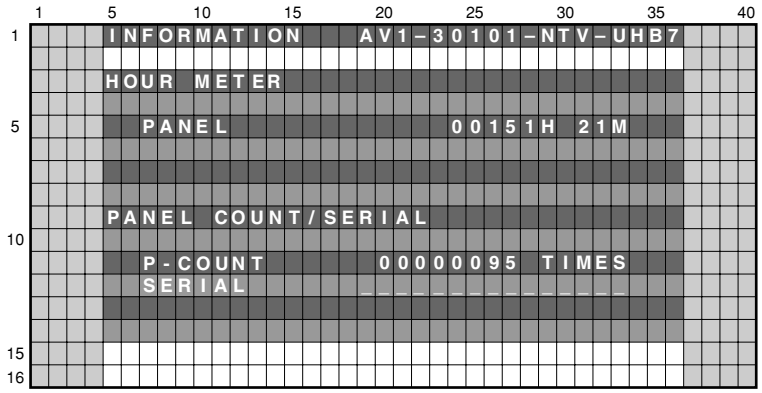

• Display/Meaning

Meaning	Item Name	Display Example	Corresponding RS232C Command
HOUR METER (PANEL)	PANEL	00151H 21M	QIP
POWER ON COUNTER	P-COUNT	00000095 TIMES	QIP
SYSTEM SERIAL	SERIAL		QIP

Note 1: The SYSTEM SERIAL displays only FHD. It corresponds by sticking the seal in G7 model.
Note 2: The PANEL-side's HOUR METER/P-COUNT acquires information from the PANEL-side.

8.2.4 INITIALIZE

Operation item

No.	Function	Content	RS232C
1	SYNC DET (+)	Exclusively used for technical analsyis.	–––
2	SG MODE ⇔	Paired SG_MODE with SG_PATTERN. Select SG Route.	–––
3	SG PATTERN ⇔	Paired SG_MODE with SG_PATTERN. Select SG Pattern.	–––
4	SIDE MASK LEVEL (+)	Configure the color of the side mask.	BSL, GSL, RSL
5	FINAL SETUP (+)	Initialize flash memorys on virgin product status	FST
6	CVT AUTO ⇔	Exclusively used for technical analsyis.	–––
7	HDMI INTR POSITION (+)	Exclusively used for technical analsyis.	–––

8.2.4.1 SYNC DET (+)

Exclusively used for technical analsyis (details omitted).

8.2.4.2 SG MODE

SG MODE (SG's route selection) / SG PATTERN (signal pattern selection) are used as pair.
In SG MODE, select the SG route and then select the SG pattern to be sent by the selected route.
In SG MODE, make sure to select the route first.

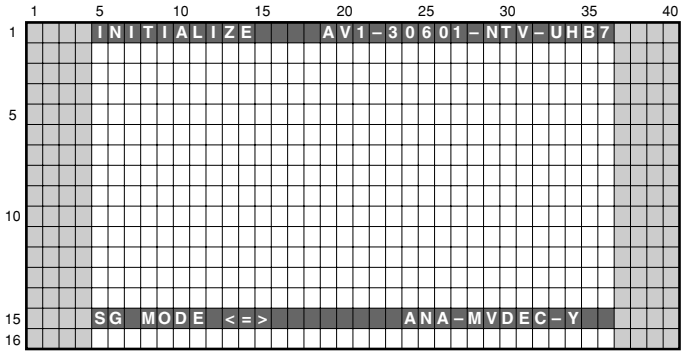

Operation item

No.	Display	Content
1	SG OFF	SG Mode is OFF.
2	DIG MVDEC YCBCR	MAIN VDEC: YCbCr (Digital output mode)
3	ANA MVDEC Y	MAIN VDEC: Y (Analog output mode: SG VDEC return setting)
4	ANA SVDEC Y	SUB VDEC:Y
5	ANA AD YCBCR	AD: YcbCr (Analog output to the RGB SW)
6	ANA AD RGB	AD: RGB (Analog output to the RGB SW)

Please confirm "SG generation place" and "Route of the signal" by the block chat.

9. SCHEMATIC DIAGRAM

9.1 MAIN ASSY(1/9) [BOARD IF BLOCK]

MAIN ASSY (EU/IBD) (1/9)

• BOARD_IF BLOCK NOT USE [ ]: STANDBY

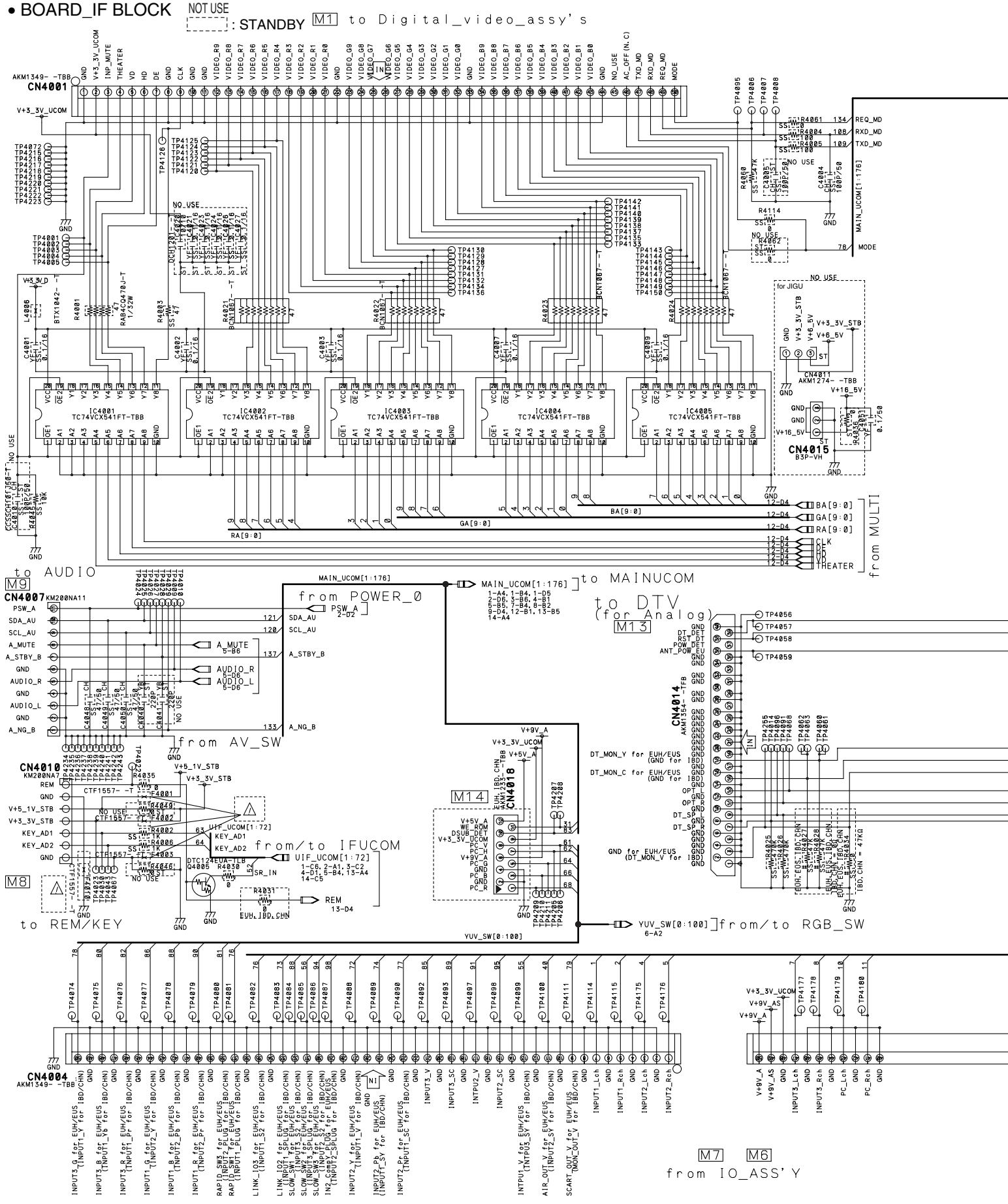

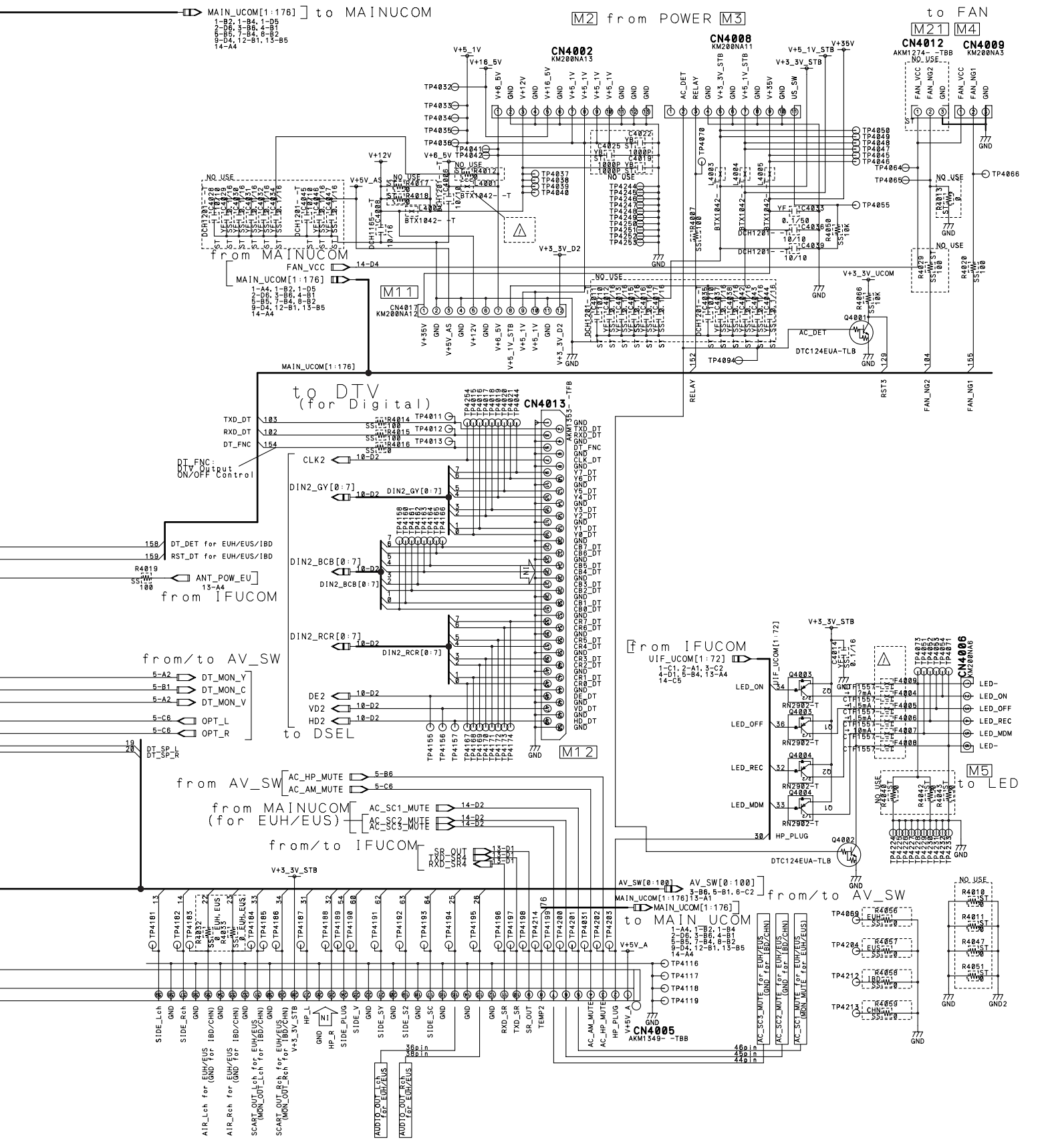
MAIN_UCOM[1:176]] to MAINUCOM
1-B2, 1-B4, 1-D5
2-D6, 5-B6, 4-B1
6-B5, 7-B4, 8-B2
9-D4, 12-B1, 13-B5
14-A4
M2 from POWER M3
to FAN
M21 M4
CN4002
KM200NA13
CN4008
KM200NA11
CN4012
AKM1274- -TBB
CN4009
KM200NA3
from MAINUCOM
FAN_VCC
MAIN_UCOM[1:176]
M11
CN4017
KM200NA12
MAIN_UCOM[1:176]
to DTV
(for Digital)
CN4013
AKM1353- -TFB
TXD_DT
RXD_DT
DT_FNC
DT_FNC:
DTV Output
ON/OFF Control
CLK2
DIN2_GY[0:7]
DIN2_BCB[0:7]
DIN2_RCR[0:7]
DE2
VD2
HD2
to DSEL
M12
DT_DET for EUH/EUS/IBD
RST_DT for EUH/EUS/IBD
ANT_POW_EU
from IFUCOM
from/to AV_SW
DT_MON_Y
DT_MON_C
DT_MON_V
OPT_L
OPT_R
DT_SP_L
DT_SP_R
from IFUCOM
UIF_UCOM[1:72]
CN4006
KM200NA6
LED_ON
LED_OFF
LED_REC
LED_MDM
HP_PLUG
M5
to LED
from AV_SW
AC_HP_MUTE
AC_AM_MUTE
from MAINUCOM
(for EUH/EUS)
AC_SC1_MUTE
AC_SC2_MUTE
AC_SC3_MUTE
from/to IFUCOM
SR_OUT
TXD_SR4
RXD_SR4
AV_SW[0:100]
MAIN_UCOM[1:176]
to MAIN_UCOM
from/to AV_SW
CN4005
AKM1349- -TBB
SIDE_Lch
SIDE_Rch
SIDE_V
SIDE_SV
SIDE_S2
SIDE_SC
HP_L
HP_R
RXD_SR
TXD_SR
SR_OUT
TEMP2
AC_AM_MUTE
AC_HP_MUTE
HP_PLUG
AC_SC3_MUTE (GND for EUH/EUS)
AC_SC2_MUTE (GND for EUH/EUS)
AC_SC1_MUTE (MON_MUTE for EUH/EUS)
AIR_Lch for EUH/EUS (GND for IBD/CHN)
AIR_Rch for EUH/EUS (GND for IBD/CHN)
SCART_OUT_Lch for EUH/EUS (MON_OUT_Lch for IBD/CHN)
SCART_OUT_Rch for EUH/EUS (MON_OUT_Rch for IBD/CHN)
AUDIO_OUT_Lch for EUH/EUS
AUDIO_OUT_Rch for EUH/EUS
DTC124EUA-TLB
AC_DET
RELAY
RST3
FAN_NG2
FAN_NG1

9.2 MAIN ASSY(2/9) [REG 0 BLOCK]

MAIN ASSY (EU/IBD) (2/9)

- REG_0 BLOCK

NOT USE
: STANDBY

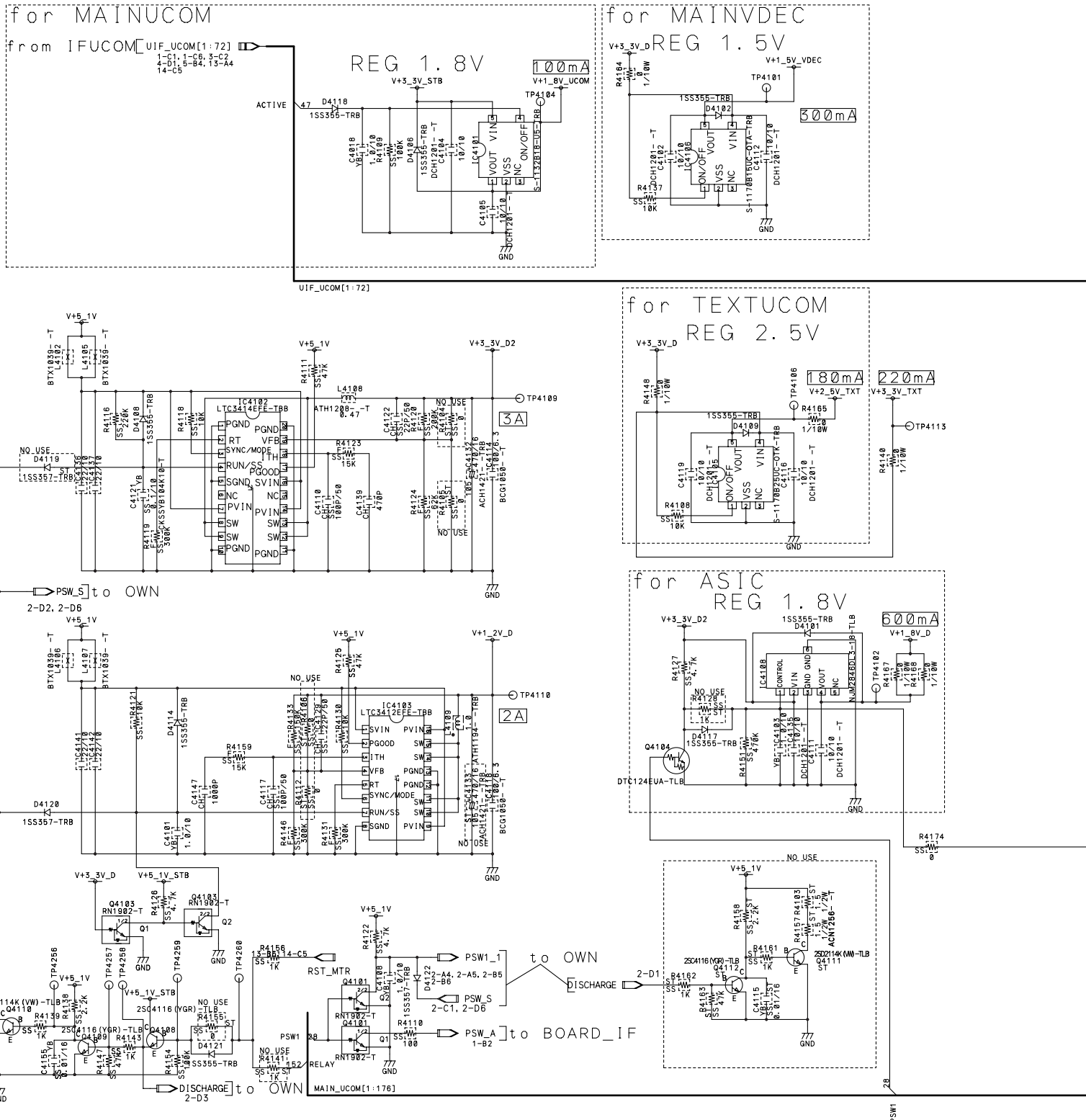

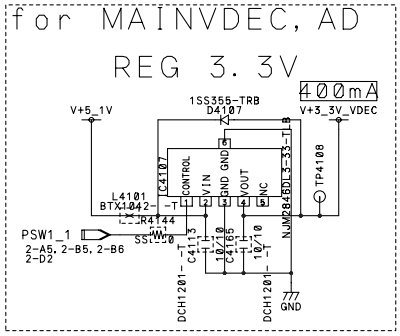

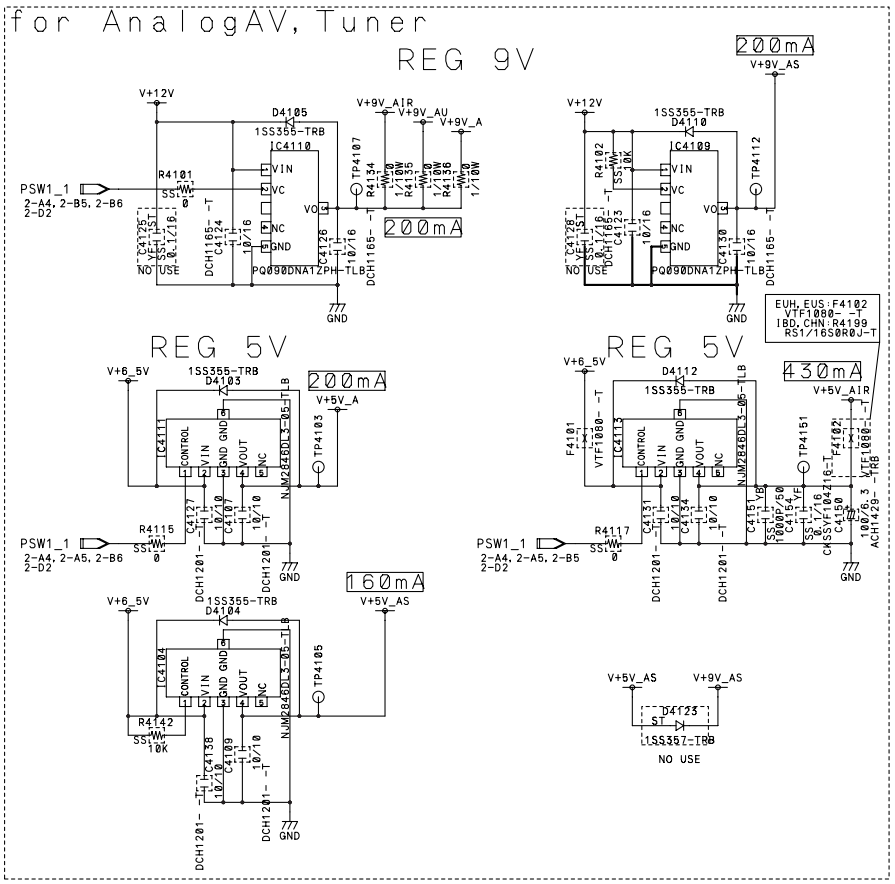

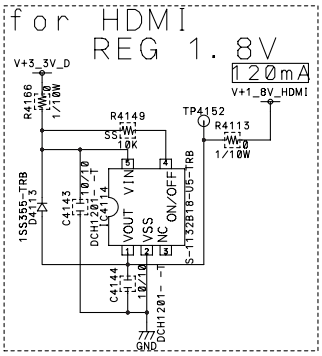

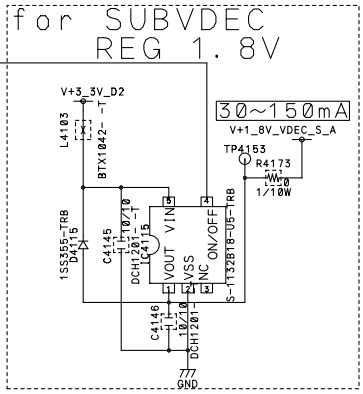

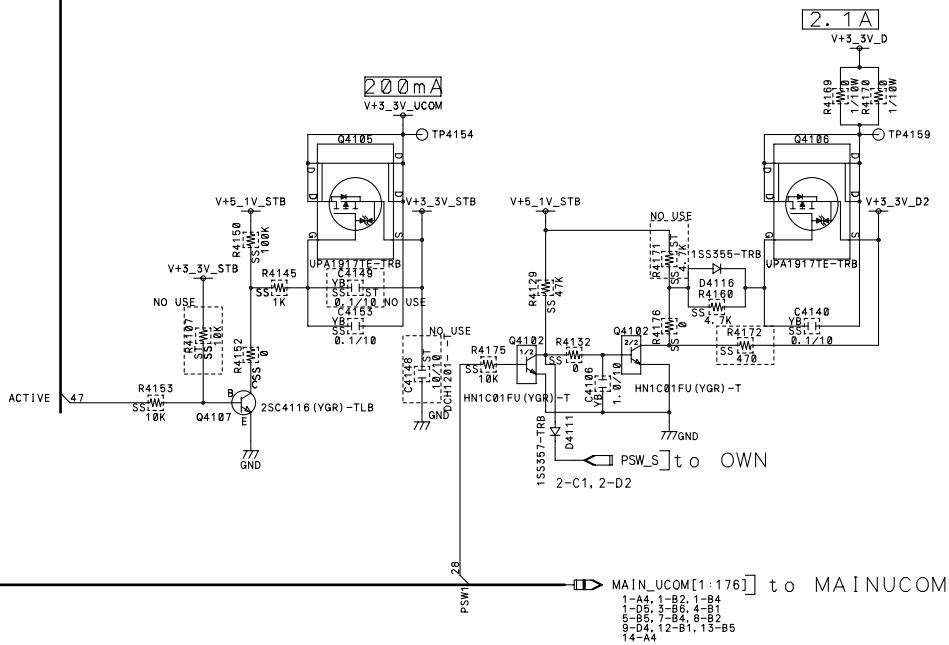

Use Resistor:ACN1268- -T(R4157) and two LeadWires:ADX3513- insted of Resistor:RS1/16SS471J-T(R4172) until the suffix of MAIN PCB is changed to D.

9.3 MAIN ASSY(3/9) [ATUNER BLOCK]

MAIN ASSY (EU/IBD) (3/9)

• ATUNER BLOCK

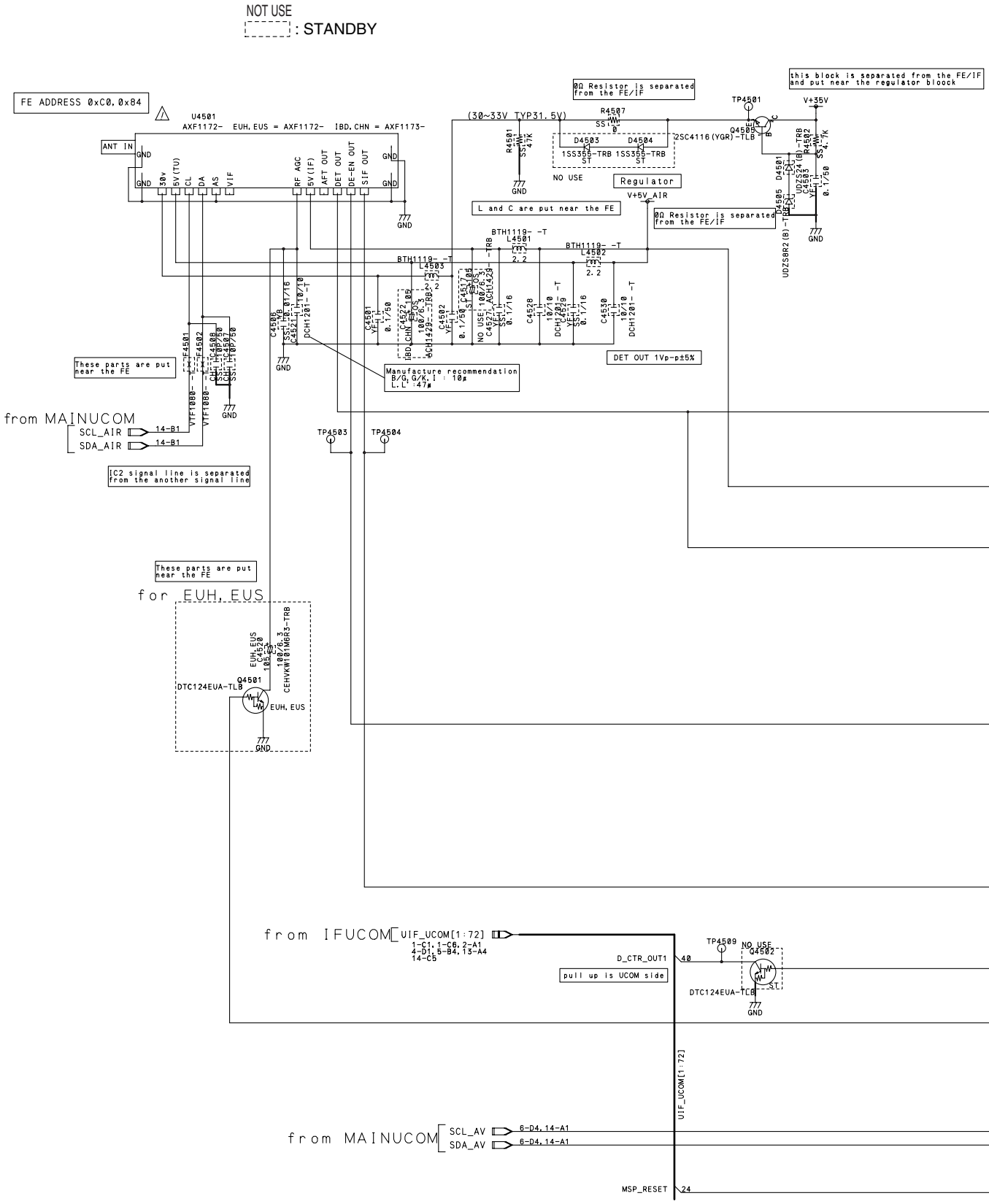

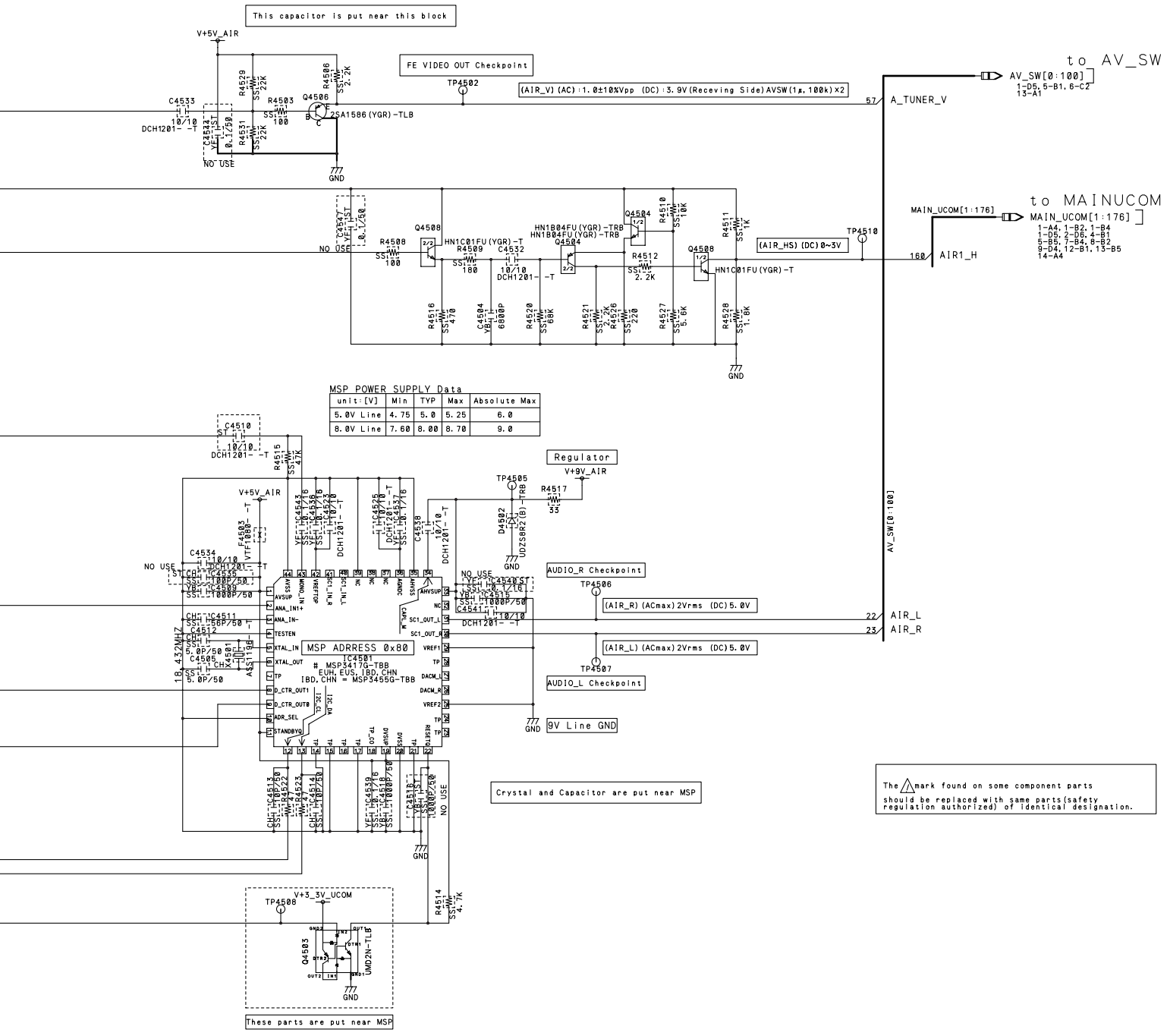
This capacitor is put near this block
V+5V_AIR
FE VIDEO OUT Checkpoint
TP4502
(AIR_V) (AC) : 1.0±10%Vpp (DC) : 3.9V (Receving Side) AVSW(1μ, 100k)×2
to AV_SW
AV_SW[0:100]
1-D5, 5-B1, 6-C2
13-A1
A_TUNER_V
Q4506
2SA1586(YGR)-TLB
NO USE
GND
to MAINUCOM
MAIN_UCOM[1:176]
1-A4, 1-B2, 1-B4
1-D5, 2-D6, 4-B1
5-B5, 7-B4, 8-B2
9-D4, 12-B1, 13-B5
14-A4
AIR1_H
(AIR_HS) (DC) 0~3V
TP4510
HN1C01FU(YGR)-T
HN1B04FU(YGR)-TRB
Q4508
Q4504
Q4509
MSP POWER SUPPLY Data
unit:[V] | Min | TYP | Max | Absolute Max
5.0V Line | 4.75 | 5.0 | 5.25 | 6.0
8.0V Line | 7.60 | 8.00 | 8.70 | 9.0
Regulator
V+9V_AIR
TP4505
AUDIO_R Checkpoint
TP4506
(AIR_R) (ACmax) 2Vrms (DC) 5.0V
AIR_L
AIR_R
(AIR_L) (ACmax) 2Vrms (DC) 5.0V
TP4507
AUDIO_L Checkpoint
9V Line GND
MSP ADRRESS 0x80
IC4501
MSP3417G-TBB
EUH, EUS, IBD, CHN
IBD, CHN = MSP3455G-TBB
18.432MHZ
Crystal and Capacitor are put near MSP
V+3_3V_UCOM
TP4508
Q4503
UMD2N-TLB
These parts are put near MSP
The △ mark found on some component parts should be replaced with same parts (safety regulation authorized) of identical designation.

9.4 MAIN ASSY(4/9) [AV SW BLOCK]

MAIN ASSY (EU/IBD) (4/9)

• AV_SW BLOCK

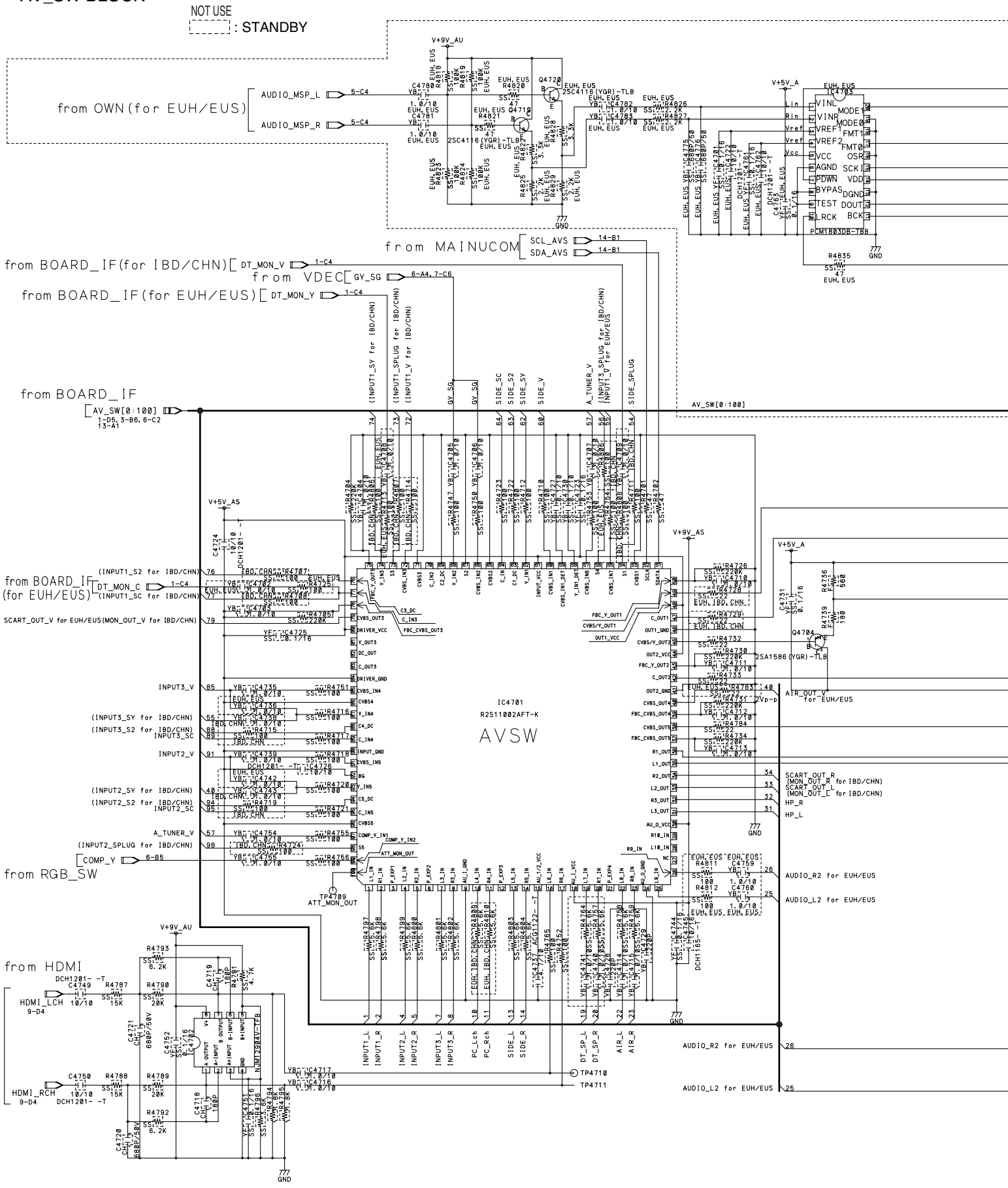

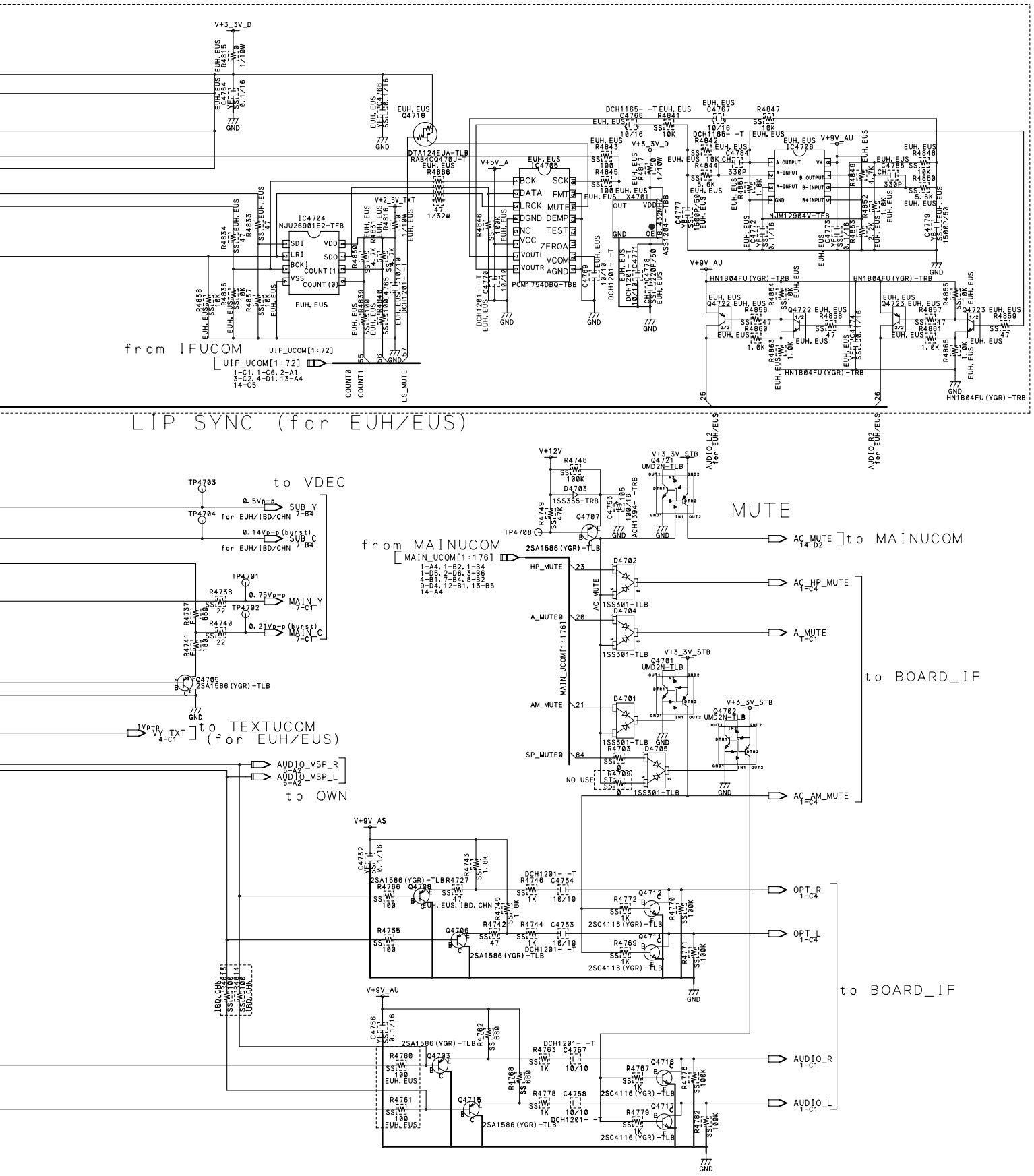
LIP SYNC (for EUH/EUS)
MUTE
from IFUCOM
to VDEC
to TEXTUCOM (for EUH/EUS)
to OWN
from MAINUCOM
to MAINUCOM
to BOARD_IF
to BOARD_IF

9.5 MAIN ASSY(5/9) [RGB SW BLOCK]

MAIN ASSY (EU/IBD) (5/9)

• RGB_SW BLOCK

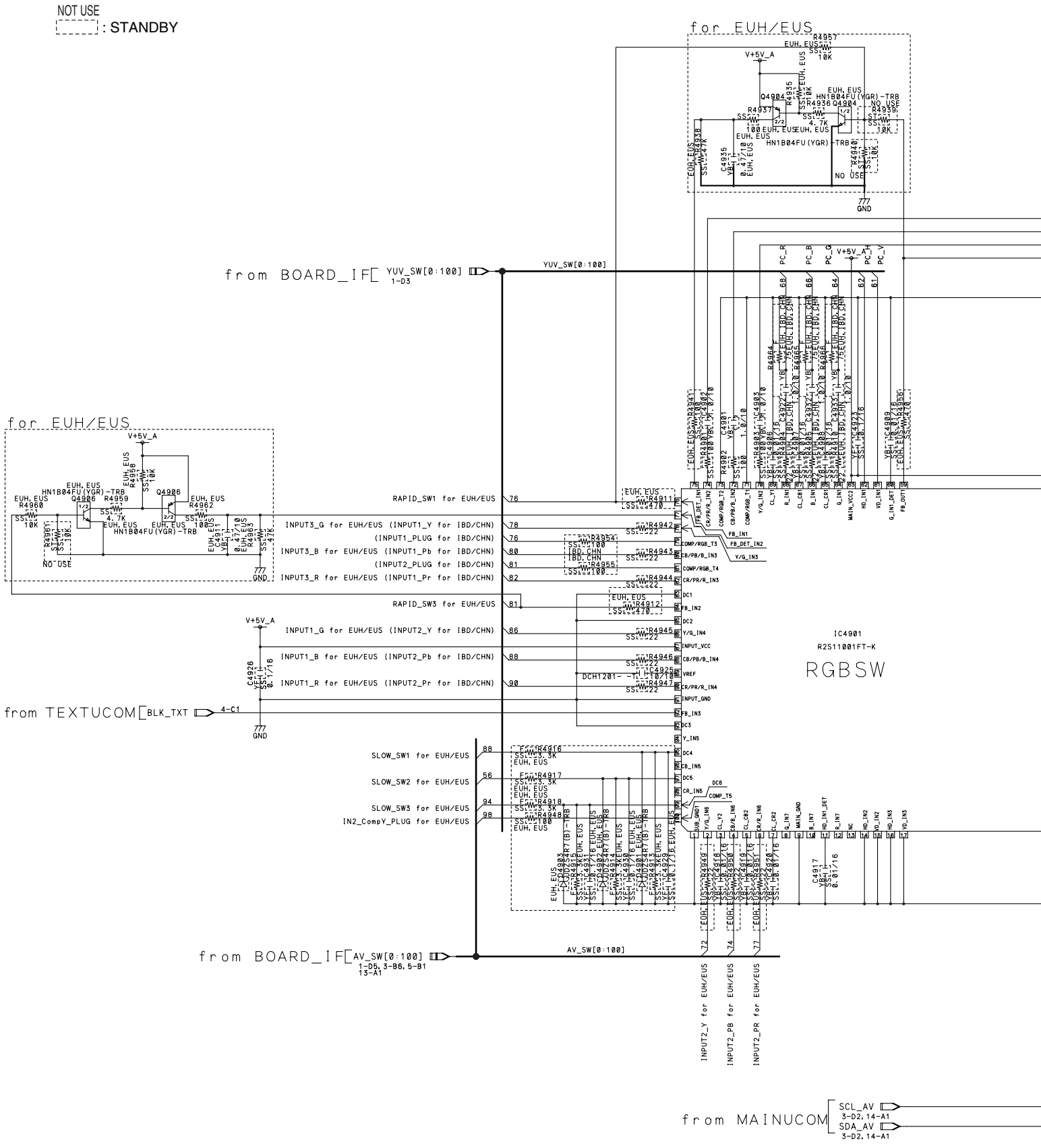

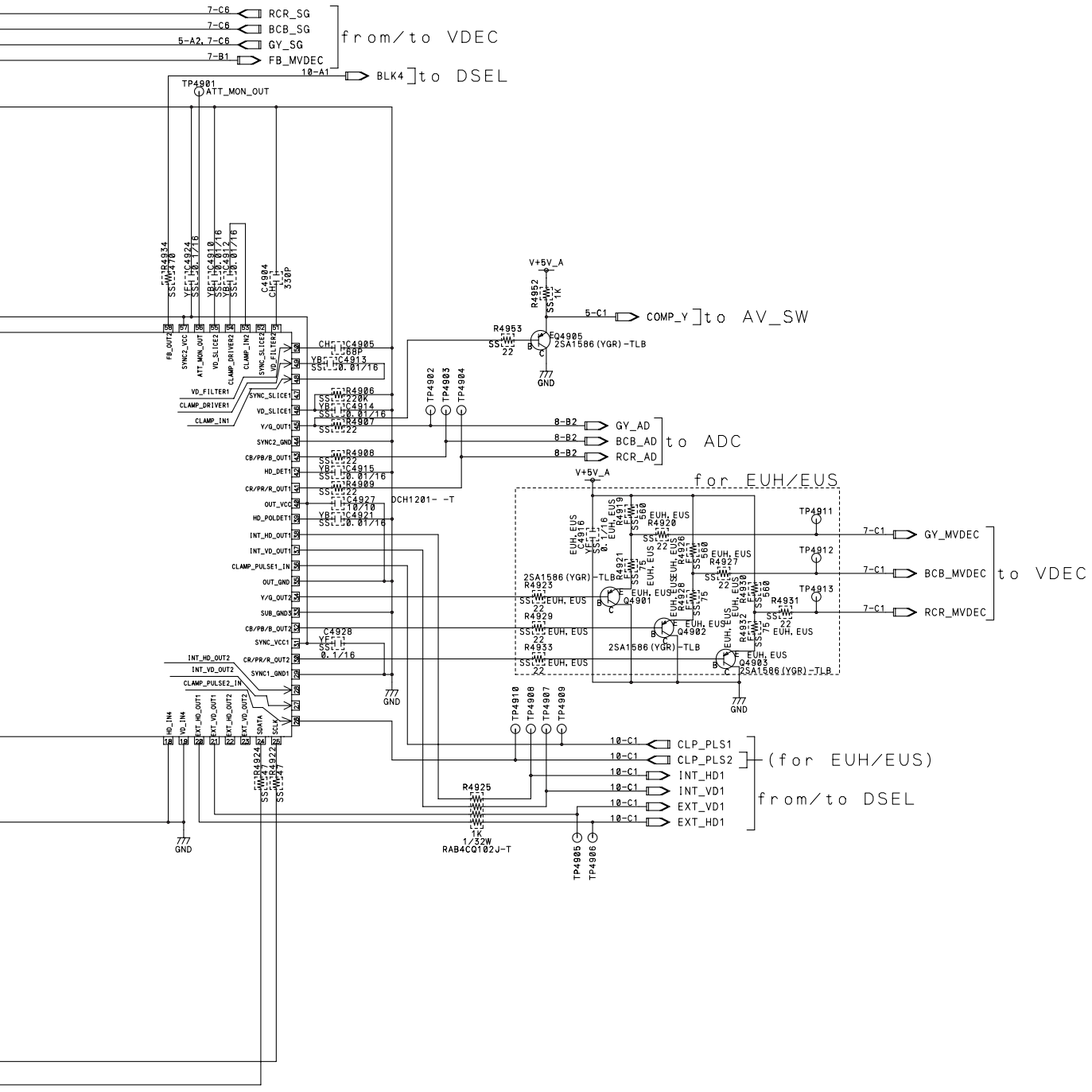
7-C6 RCR_SG
7-C6 BCB_SG
5-A2, 7-C6 GY_SG
7-B1 FB_MVDEC
from/to VDEC
10-A1 BLK4
to DSEL
TP4901
ATT_MON_OUT
V+5V_A
5-C1 COMP_Y
to AV_SW
Q4905
2SA1586(YGR)-TLB
GND
8-B2 GY_AD
8-B2 BCB_AD
8-B2 RCR_AD
to ADC
for EUH/EUS
DCH1201- -T
Q4901
Q4902
Q4903
2SA1586(YGR)-TLB
7-C1 GY_MVDEC
7-C1 BCB_MVDEC
7-C1 RCR_MVDEC
to VDEC
10-C1 CLP_PLS1
10-C1 CLP_PLS2
(for EUH/EUS)
10-C1 INT_HD1
10-C1 INT_VD1
10-C1 EXT_VD1
10-C1 EXT_HD1
from/to DSEL
R4925
1K
1/32W
RAB4CQ102J-T
TP4905
TP4906

9.6 MAIN ASSY(6/9) [VDEC BLOCK]

MAIN ASSY (EU/IBD) (6/9)

• VDEC BLOCK

NOT USE : STANDBY

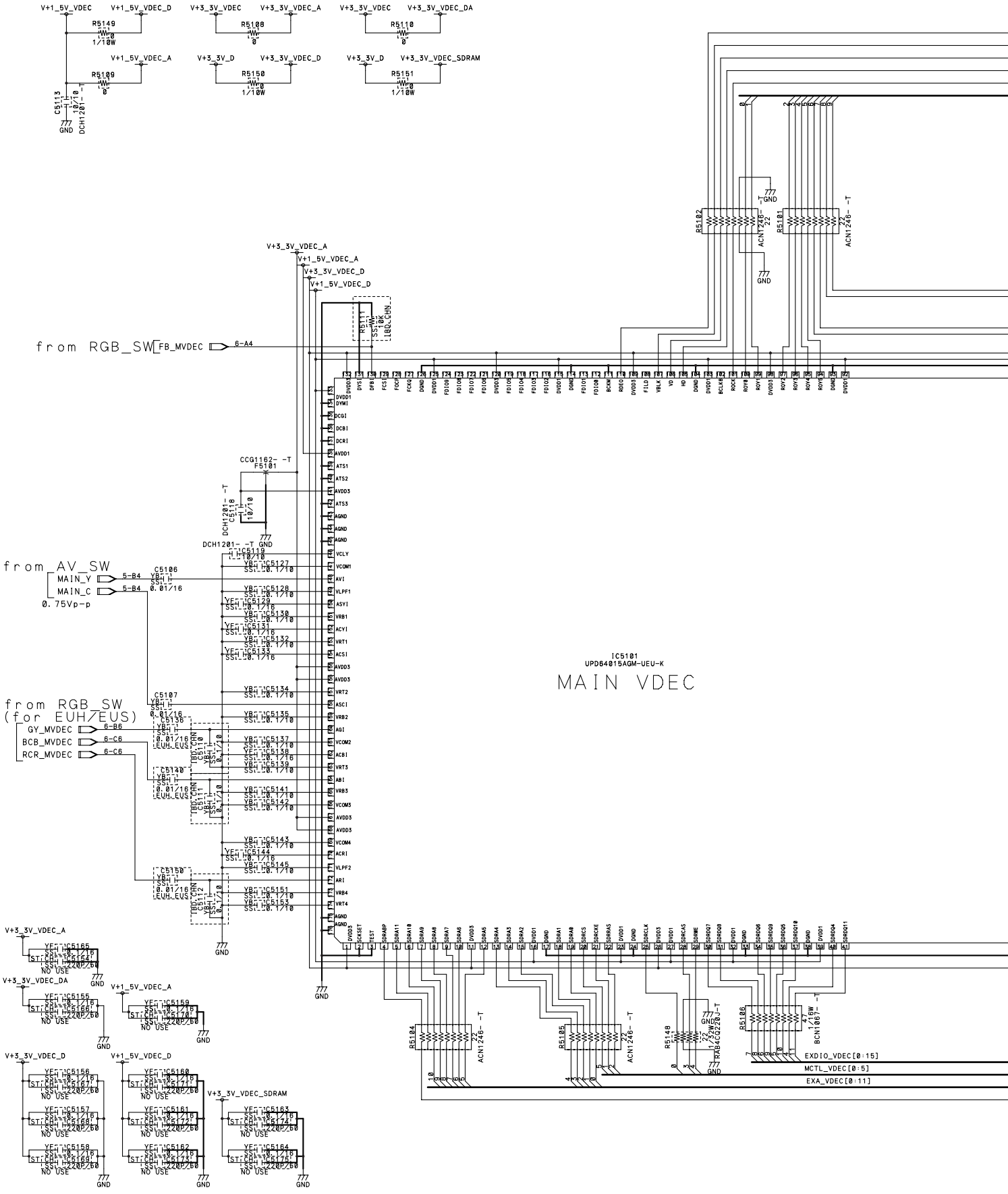

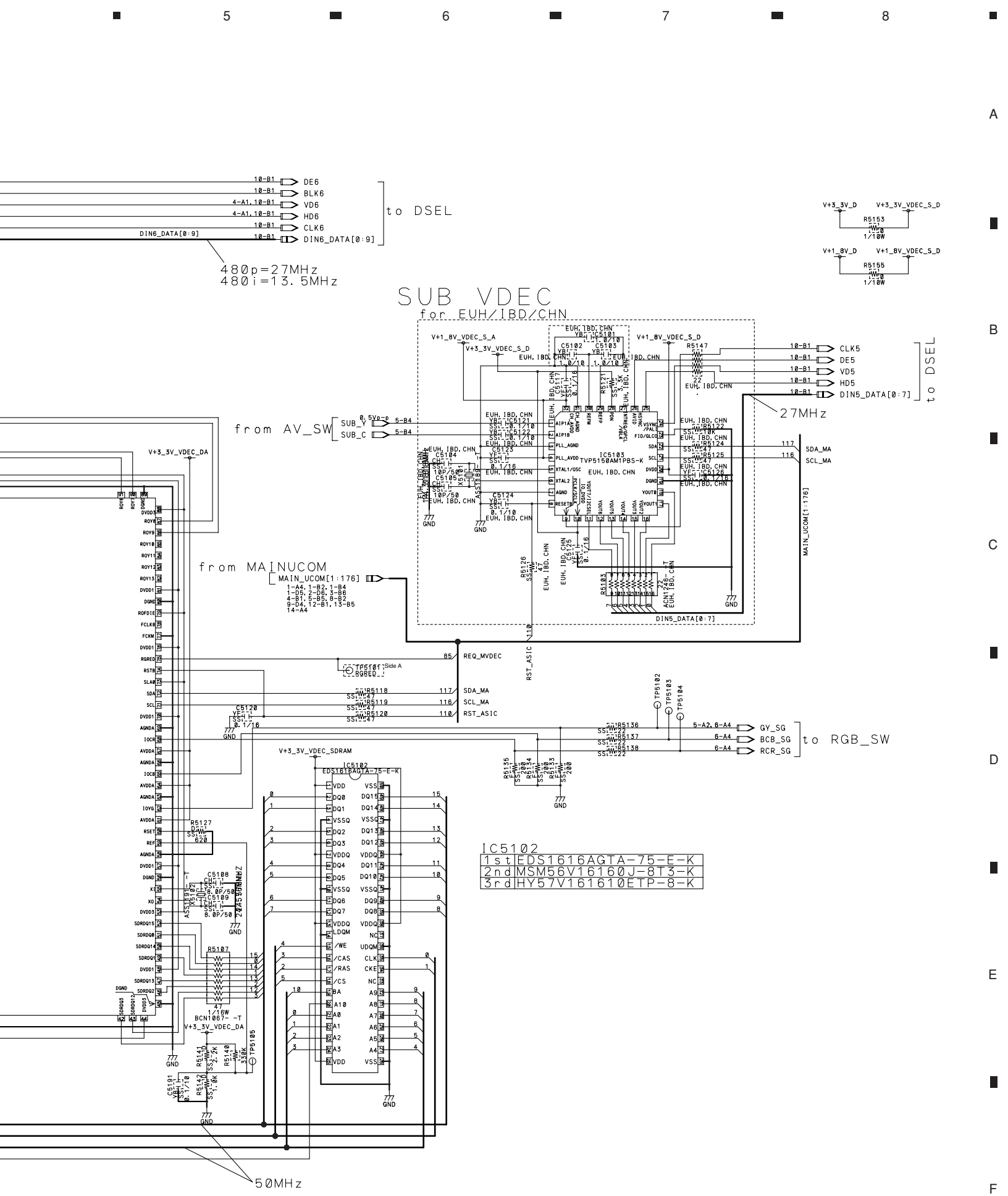
SUB VDEC
for EUH/IBD/CHN
480p=27MHz
480i=13.5MHz
to DSEL
DE6
BLK6
VD6
HD6
CLK6
DIN6_DATA[0:9]
from AV_SW
SUB_Y
SUB_C
from MAINUCOM
MAIN_UCOM[1:176]
IC5103
TVP5150AM1PBS-K
IC5102
EDS1616AGTA-75-E-K
27MHz
50MHz
REQ_MVDEC
RST_ASIC
SDA_MA
SCL_MA
to RGB_SW
GY_SG
BCB_SG
RCR_SG
CLK5
DE5
VD5
HD5
DIN5_DATA[0:7]
IC5102
1st EDS1616AGTA-75-E-K
2nd MSM56V16160J-8T3-K
3rd HY57V161610ETP-8-K

9.7 MAIN ASSY(7/9) [IF UCOM BLOCK]

MAIN ASSY (EU/IBD) (7/9)

• IF_UCOM BLOCK

NOT USE

[ ] : STANDBY

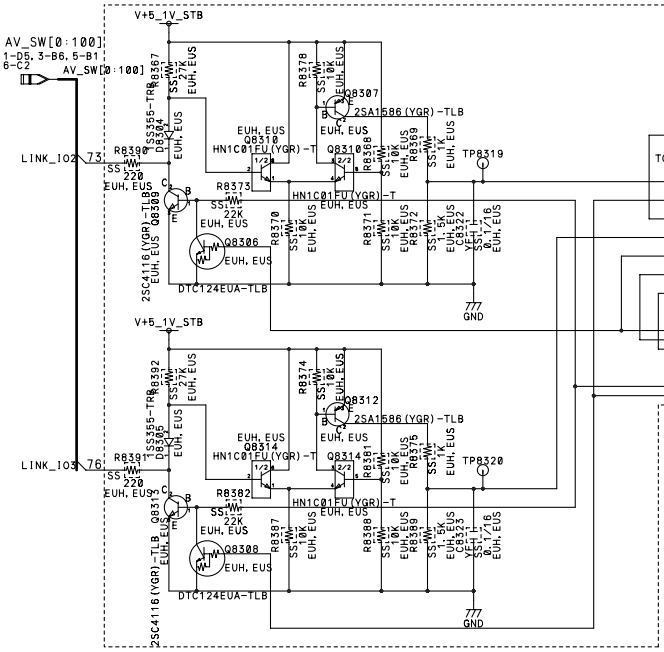

		EU	IBD
15	EXP-A4	NA	NA
16	EXP-A5	NA	NA
17	EXP-A6	NA	NA
18	EXP-A7	NA	NA
24	EXP-B0	RST_MSP(O)	RST_MSP(O)
28	EXP-B1	TXT_BSP(O)	TXT_BSP(O)
29	EXP-B2	NA	NA
30	EXP-B3	HP_PLUG(I)	HP_PLUG(I)
37	EXP-B4	ANT_POW_EU(I)	NA
38	EXP-B5	ANT_POW_B(O)	NA
39	EXP-B6	IN2SEL_B(O)	NA
40	EXP-B7	D_CTR_OUT1(I)	D_CTR_OUT1(I)
55	EXP-A3	COUNT0	NA
56	EXP-A2	COUNT1	NA
57	EXP-A1	LS_MUTE	NA
58	EXP-A0	NA	NA

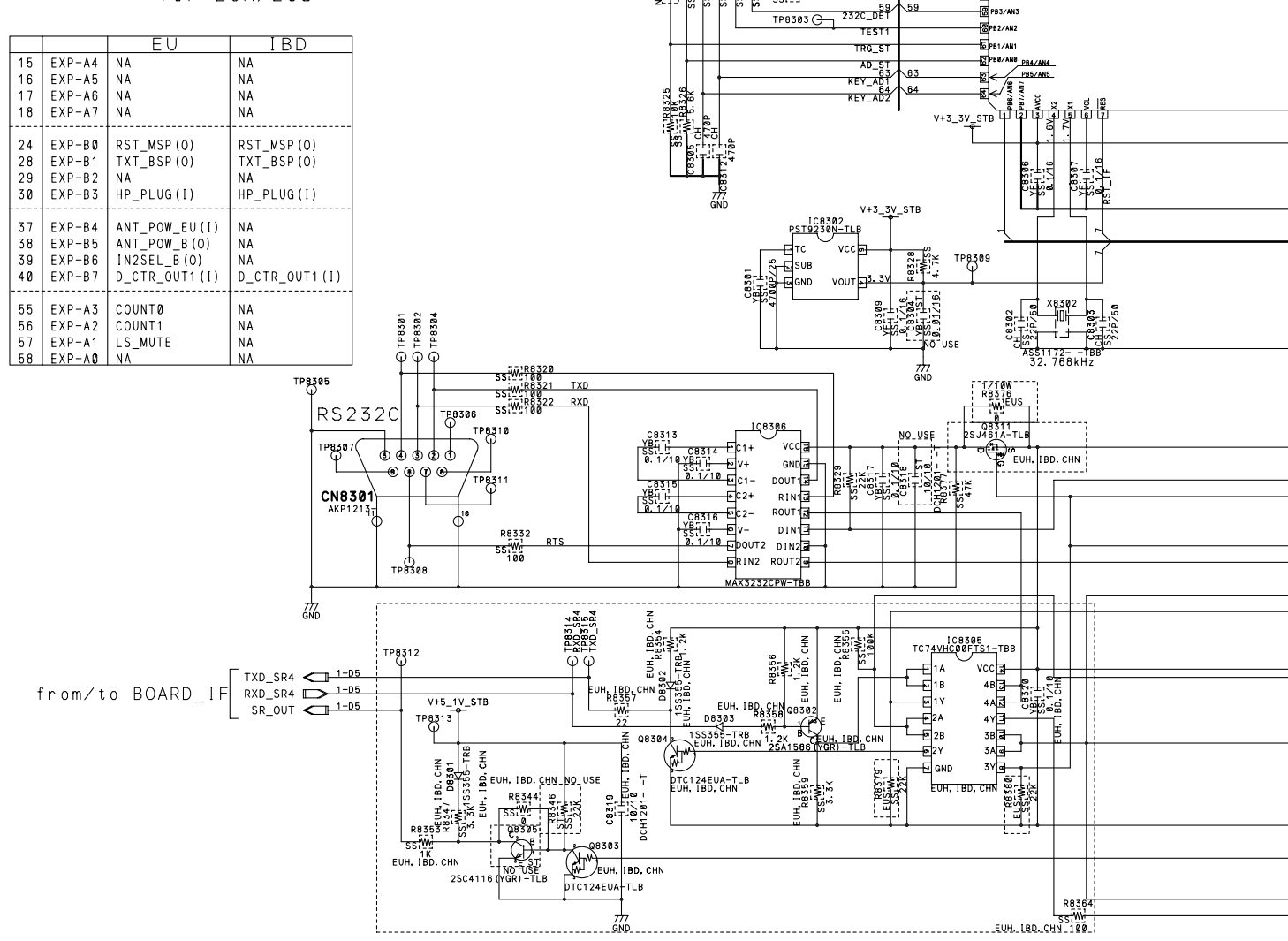

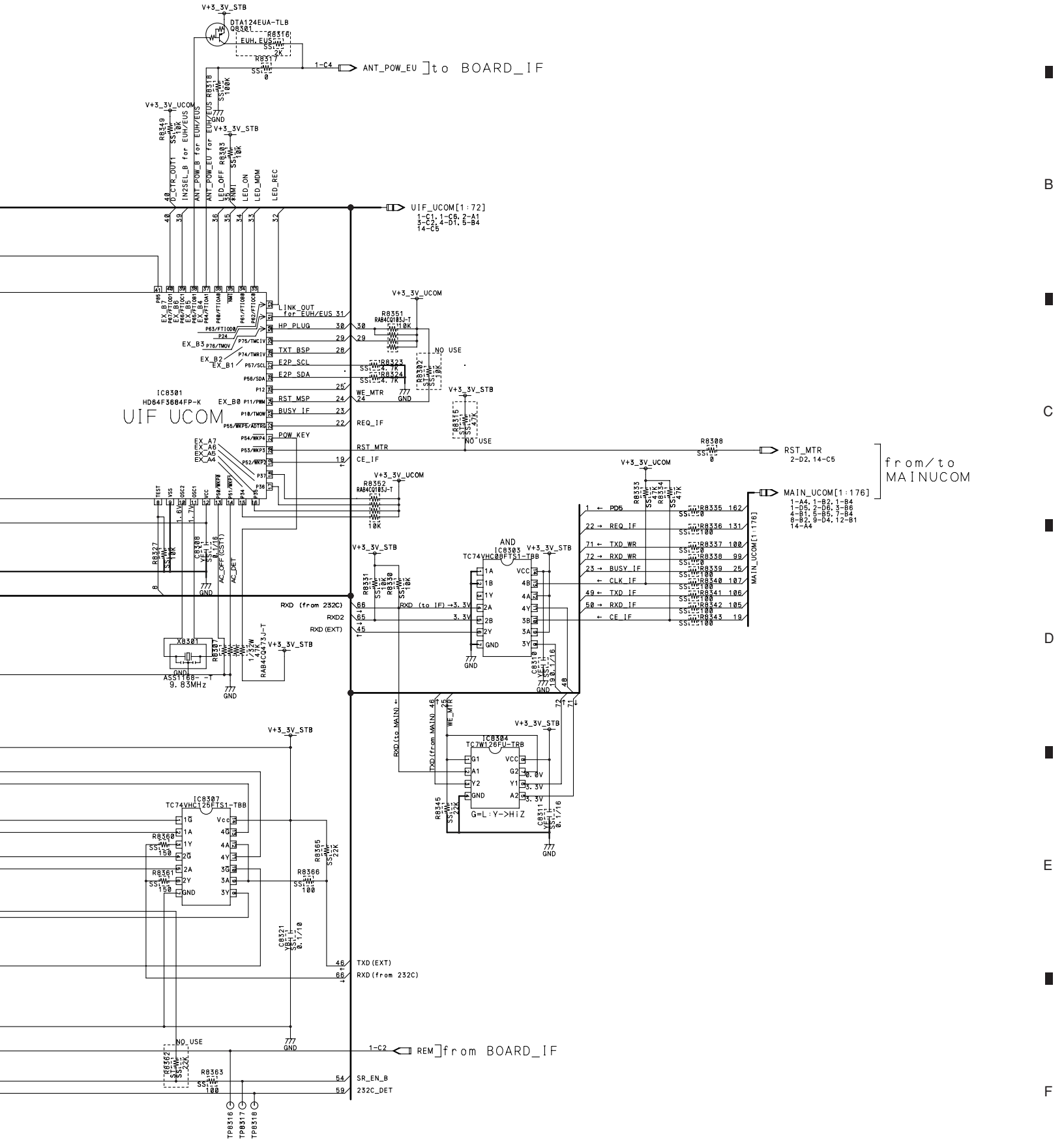

V+3_3V_STB
DTA124EUA-TLB
Q8301
R8316
EUH, EUS
R8317
1-C4
ANT_POW_EU
to BOARD_IF
V+3_3V_UCOM
R8349
R8318
D_CTR_OUT1
IN2SEL_B for EUH/EUS
ANT_POW_B for EUH/EUS
ANT_POW_EU for EUH/EUS
LED_OFF
LED_ON
LED_MDM
LED_REC
UIF_UCOM[1:72]
1-C1, 1-C6, 2-A1
3-C2, 4-D1, 5-B4
14-C5
LINK_OUT for EUH/EUS
HP_PLUG
TXT_BSP
E2P_SCL
E2P_SDA
RST_MSP
BUSY_IF
POW_KEY
IC8301
HD64F3684FP-K
UIF UCOM
R8351
RAB4CQ103J-T
NO USE
R8323
R8324
R8302
WE_MTR
REQ_IF
RST_MTR
CE_IF
R8315
R8308
RST_MTR
2-D2, 14-C5
from/to MAINUCOM
MAIN_UCOM[1:176]
1-A4, 1-B2, 1-B4
1-D5, 2-D6, 3-B6
4-B1, 5-B5, 7-B4
8-B2, 9-D4, 12-B1
14-A4
R8352
RAB4CQ103J-T
R8333
R8334
PD5
REQ_IF
TXD_WR
RXD_WR
BUSY_IF
CLK_IF
TXD_IF
RXD_IF
CE_IF
R8335
R8336
R8337
R8338
R8339
R8340
R8341
R8342
R8343
MAIN_UCOM[1:176]
R8327
C8308
AC_OFF(CST1)
AC_DET
AND
IC8303
TC74VHC08FTS1-TBB
R8331
R8330
RXD (from 232C)
RXD2
RXD (EXT)
RXD (to IF)
X8301
ASS1168- -T
9.83MHz
R8307
RAB4CQ473J-T
C8310
RXD(to MAIN)
TXD(from MAIN)
IC8304
TC7W126FU-TRB
G=L:Y->HiZ
R8345
C8311
IC8307
TC74VHC125FTS1-TBB
R8360
R8361
R8365
R8366
C8321
TXD(EXT)
RXD(from 232C)
NO USE
1-C2
REM
from BOARD_IF
R8362
R8363
SR_EN_B
232C_DET
TP8316
TP8317
TP8318

9.8 MAIN ASSY(8/9) [MAIN UCOM BLOCK]

MAIN ASSY (EU/IBD) (8/9)

• MAIN_UCOM BLOCK

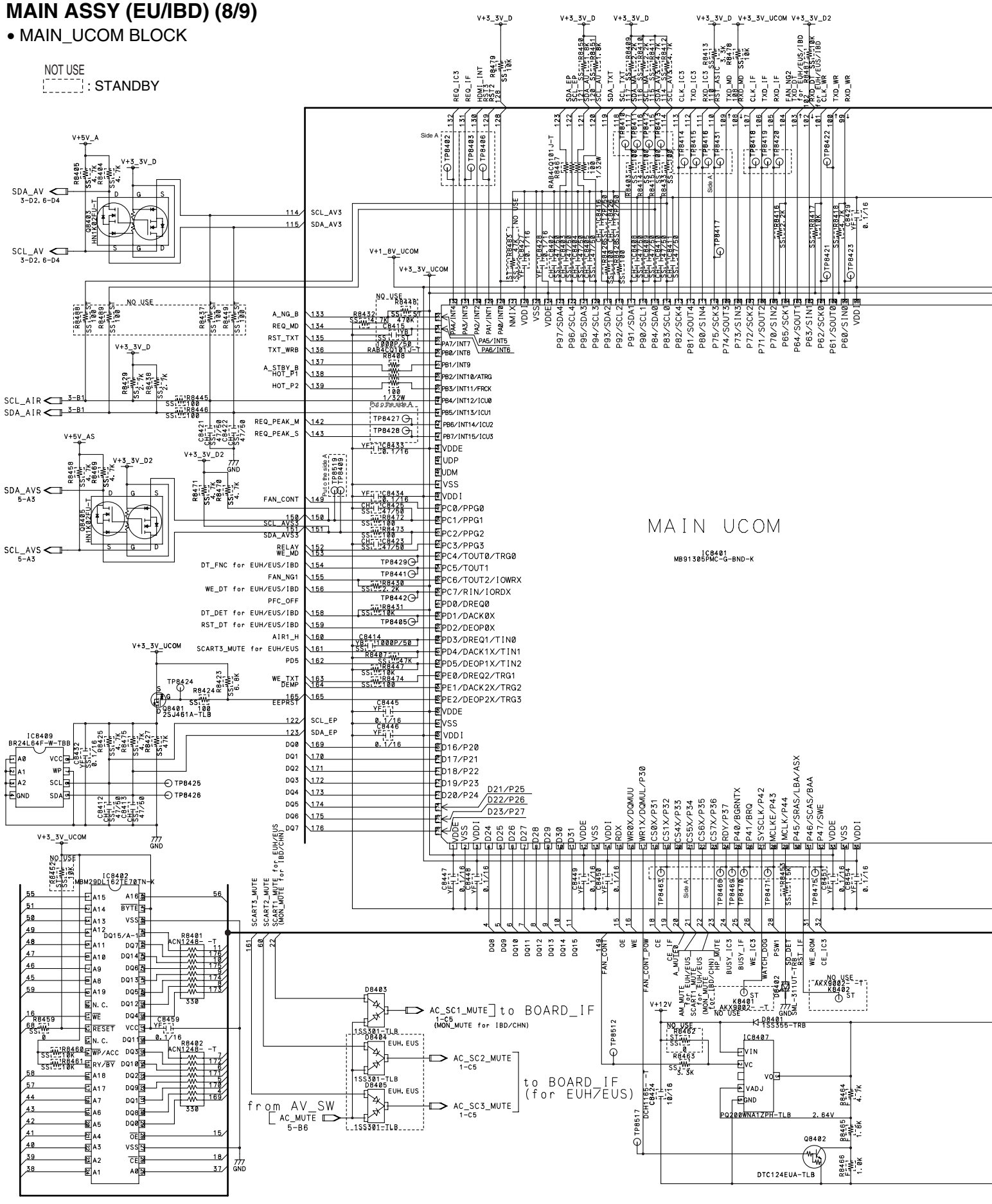

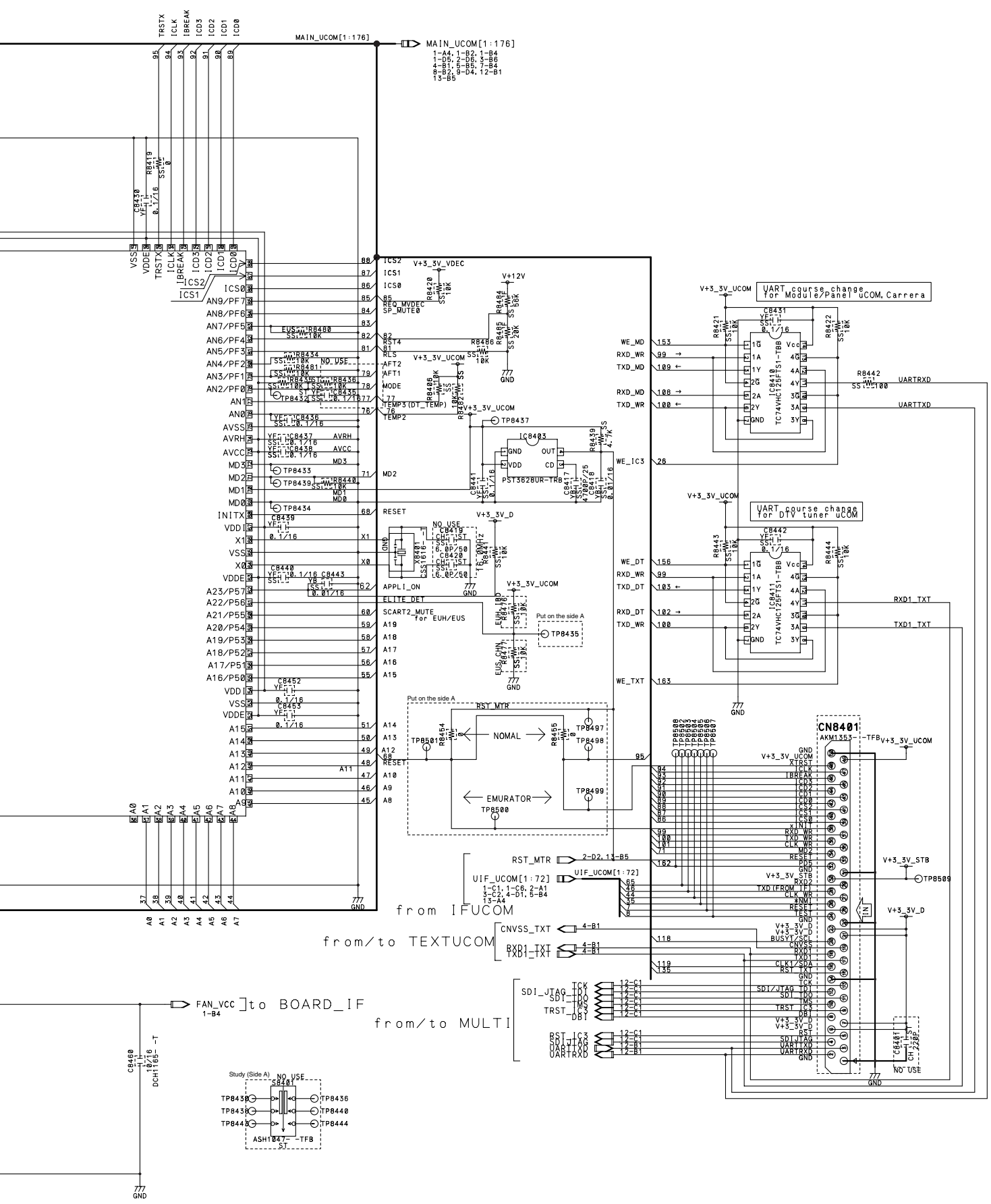
MAIN_UCOM[1:176]
1-A4, 1-B2, 1-B4
1-D5, 2-D6, 3-B6
4-B1, 5-B5, 7-B4
8-B2, 9-D4, 12-B1
13-B5
UART course change for Module/Panel uCOM, Carrera
UART course change for DTV tuner uCOM
CN8401
AKM1353- -TFB
NOMAL
EMURATOR
RST_MTR
UIF_UCOM[1:72]
from IFUCOM
from/to TEXTUCOM
from/to MULTI
FAN_VCC
to BOARD_IF
Study (Side A)
S8401
ASH1047- -TFB
PST3628UR-TRB
IC8403
IC8410
IC8411
TC74VHC125FTS1-TBB
Put on the side A
NO USE
GND

9.9 MAIN ASSY(9/9) [DESEL BLOCK]

MAIN ASSY (EU/IBD) (9/9)

• DESEL_BLOCK

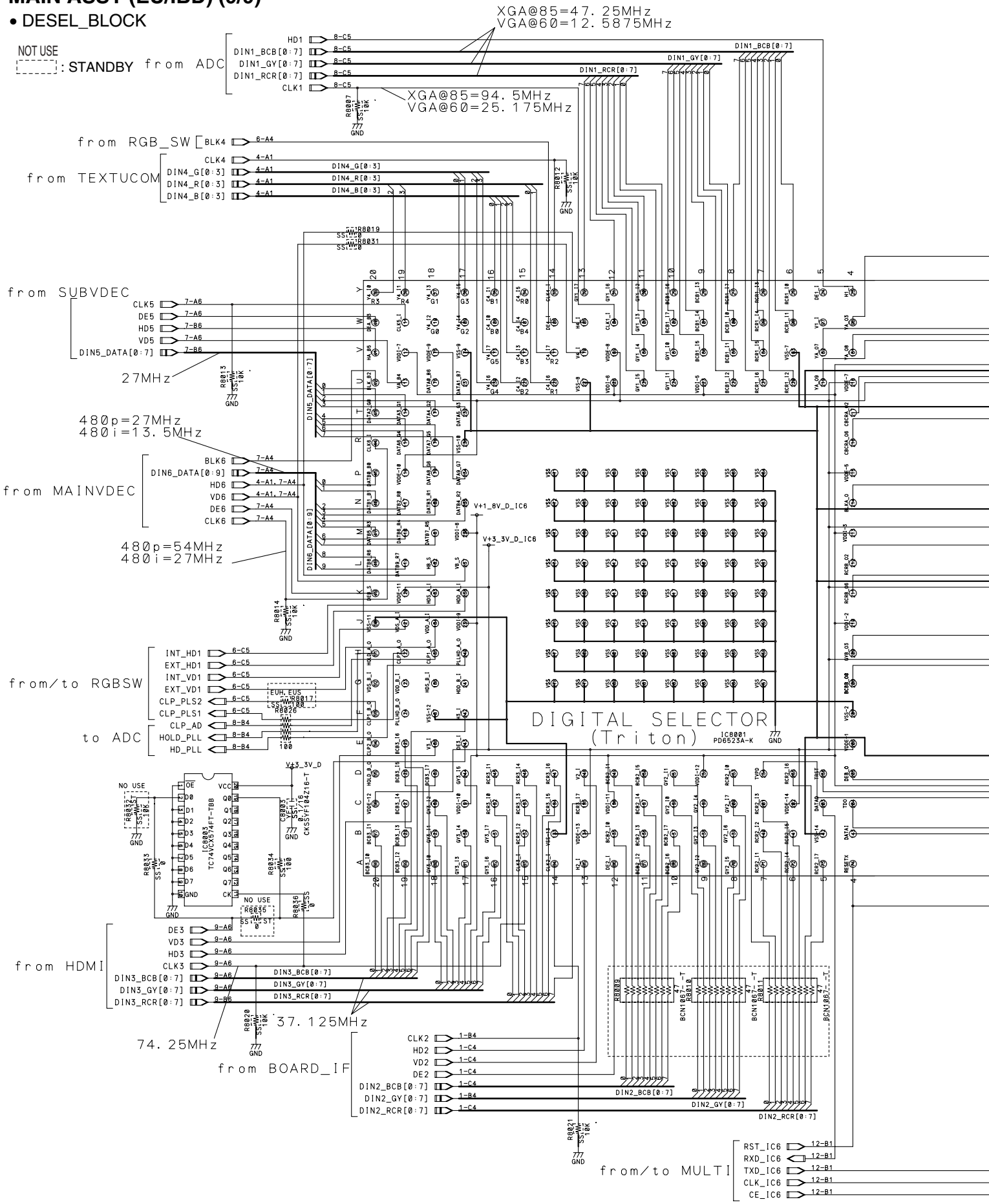

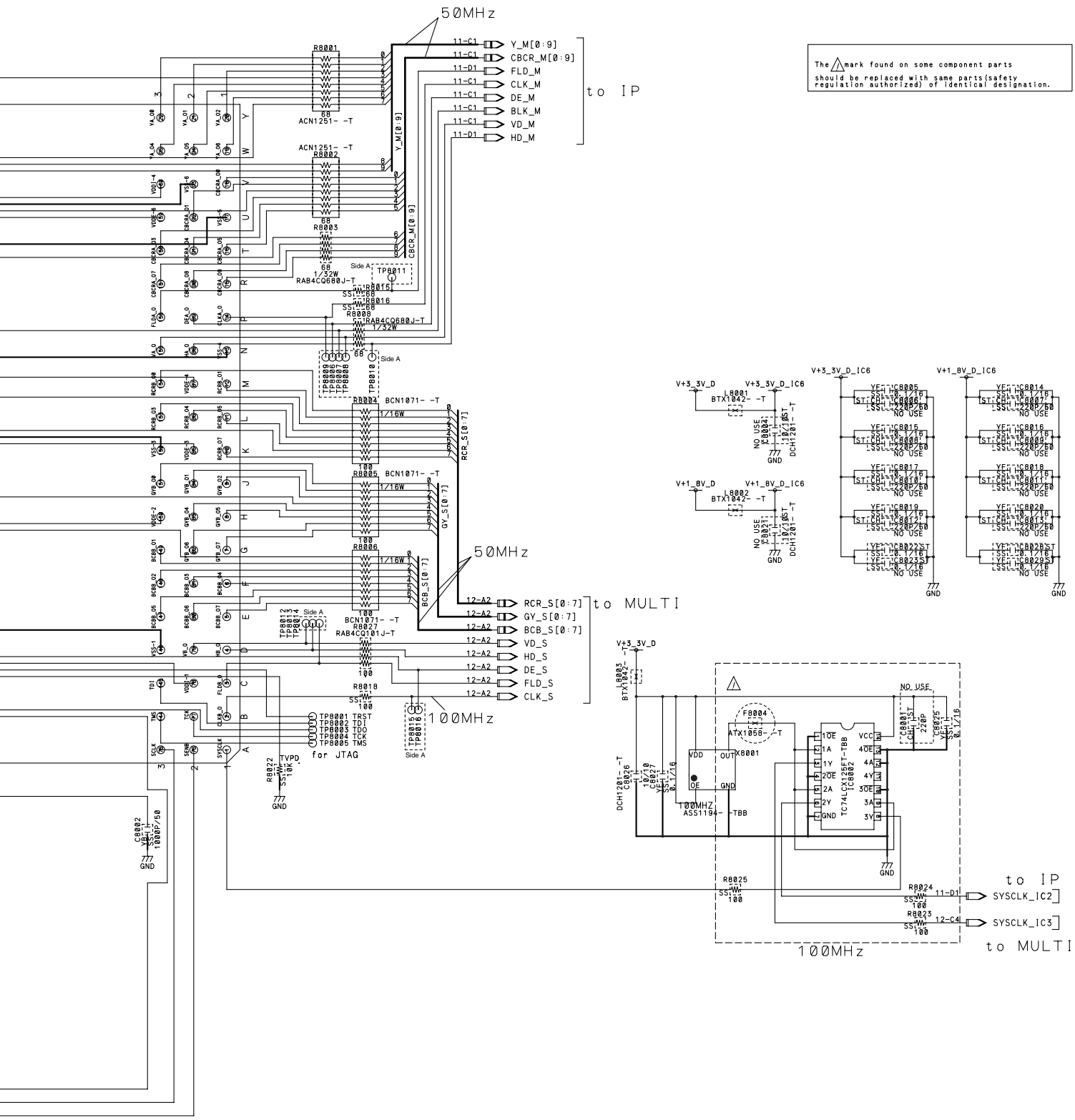

The △ mark found on some component parts should be replaced with same parts(safety regulation authorized) of identical designation.

9.10 TANSHI ASSY (1/2)

TANSHI ASSY (1/2)

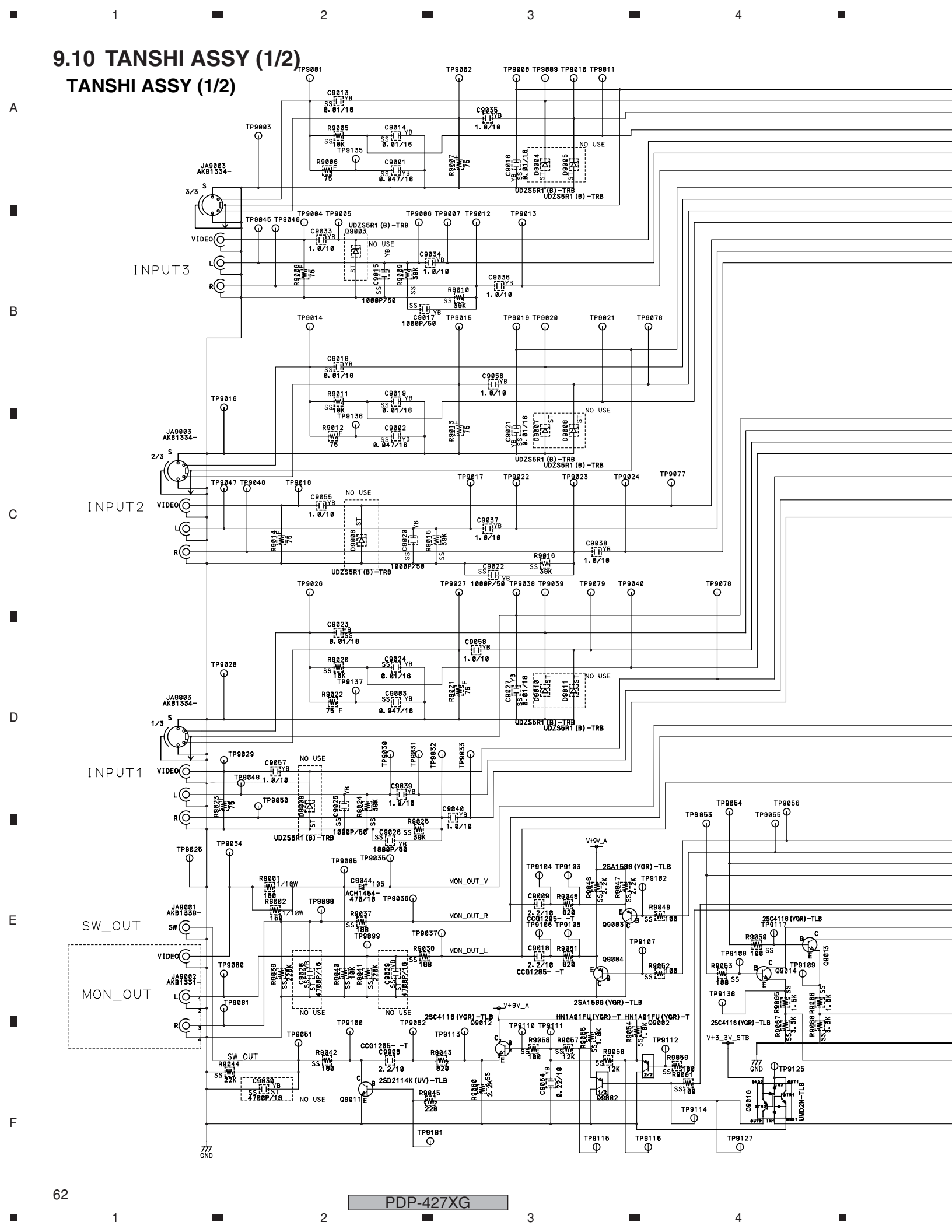

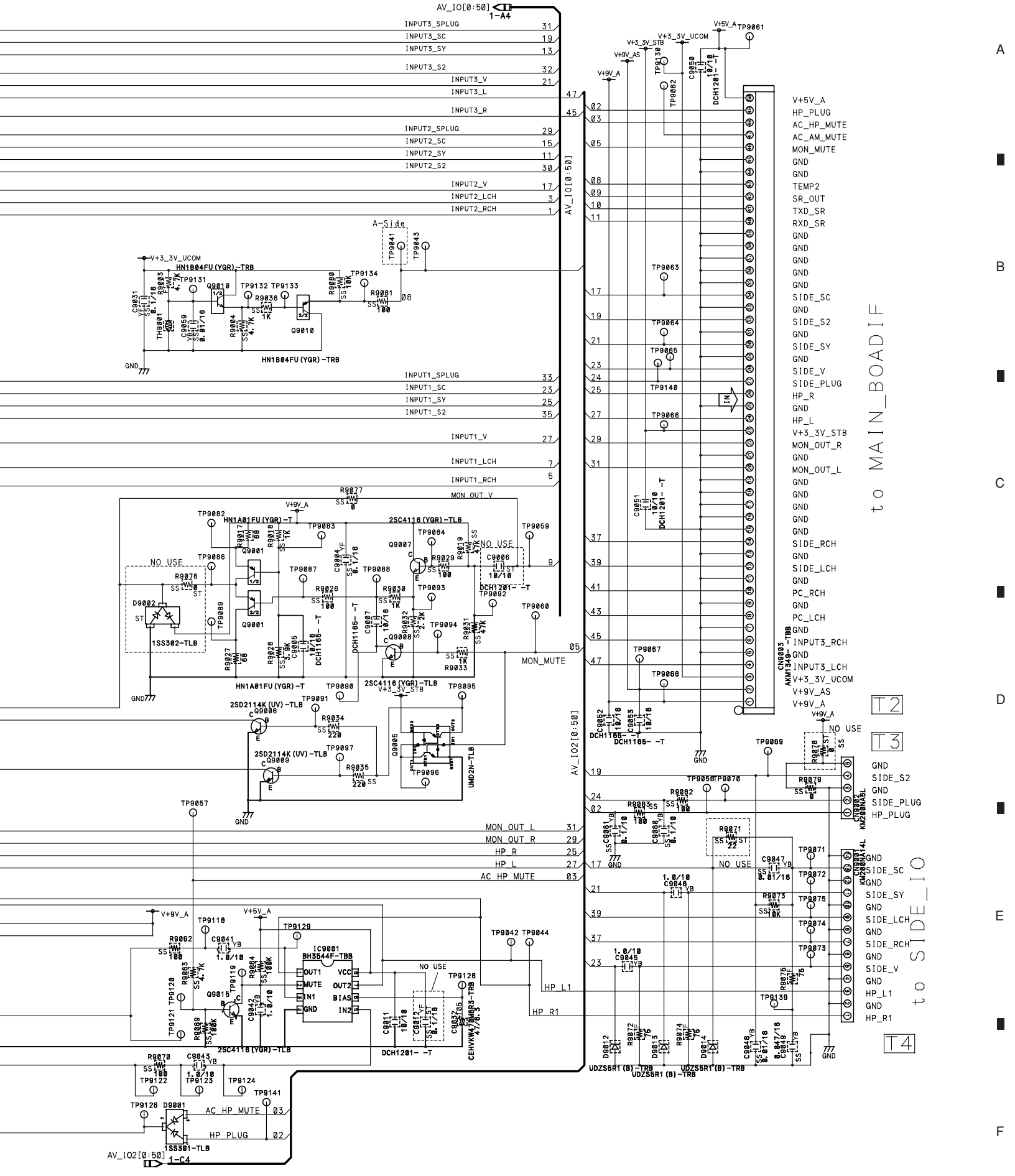
AV_IO[0:50]
1-A4
INPUT3_SPLUG
INPUT3_SC
INPUT3_SY
INPUT3_S2
INPUT3_V
INPUT3_L
INPUT3_R
INPUT2_SPLUG
INPUT2_SC
INPUT2_SY
INPUT2_S2
INPUT2_V
INPUT2_LCH
INPUT2_RCH
A-Side
HN1B04FU (YGR)-TRB
INPUT1_SPLUG
INPUT1_SC
INPUT1_SY
INPUT1_S2
INPUT1_V
INPUT1_LCH
INPUT1_RCH
MON_OUT_V
HN1A01FU (YGR)-T
2SC4116 (YGR)-TLB
NO USE
1SS302-TLB
MON_MUTE
2SD2114K (UV)-TLB
UMD2N-TLB
MON_OUT_L
MON_OUT_R
HP_R
HP_L
AC_HP_MUTE
IC9001
BH3544F-TBB
HP_L1
HP_R1
CEHVKW470M6R3-TRB
1SS301-TLB
AV_IO2[0:50]
1-C4
V+5V_A
HP_PLUG
AC_HP_MUTE
AC_AM_MUTE
MON_MUTE
GND
TEMP2
SR_OUT
TXD_SR
RXD_SR
SIDE_SC
SIDE_S2
SIDE_SY
SIDE_V
SIDE_PLUG
HP_R
HP_L
V+3_3V_STB
MON_OUT_R
MON_OUT_L
SIDE_RCH
SIDE_LCH
PC_RCH
PC_LCH
INPUT3_RCH
INPUT3_LCH
V+3_3V_UCOM
V+9V_AS
V+9V_A
CN9003
AKM1349-TBB
to MAIN_BOADIF
T2
T3
T4
CN9002
KM200NA5L
CN9001
KM200NA14L
to SIDE_IO
UDZS5R1 (B)-TRB

9.11 TANSHI ASSY (2/2)

TANSHI ASSY (2/2)

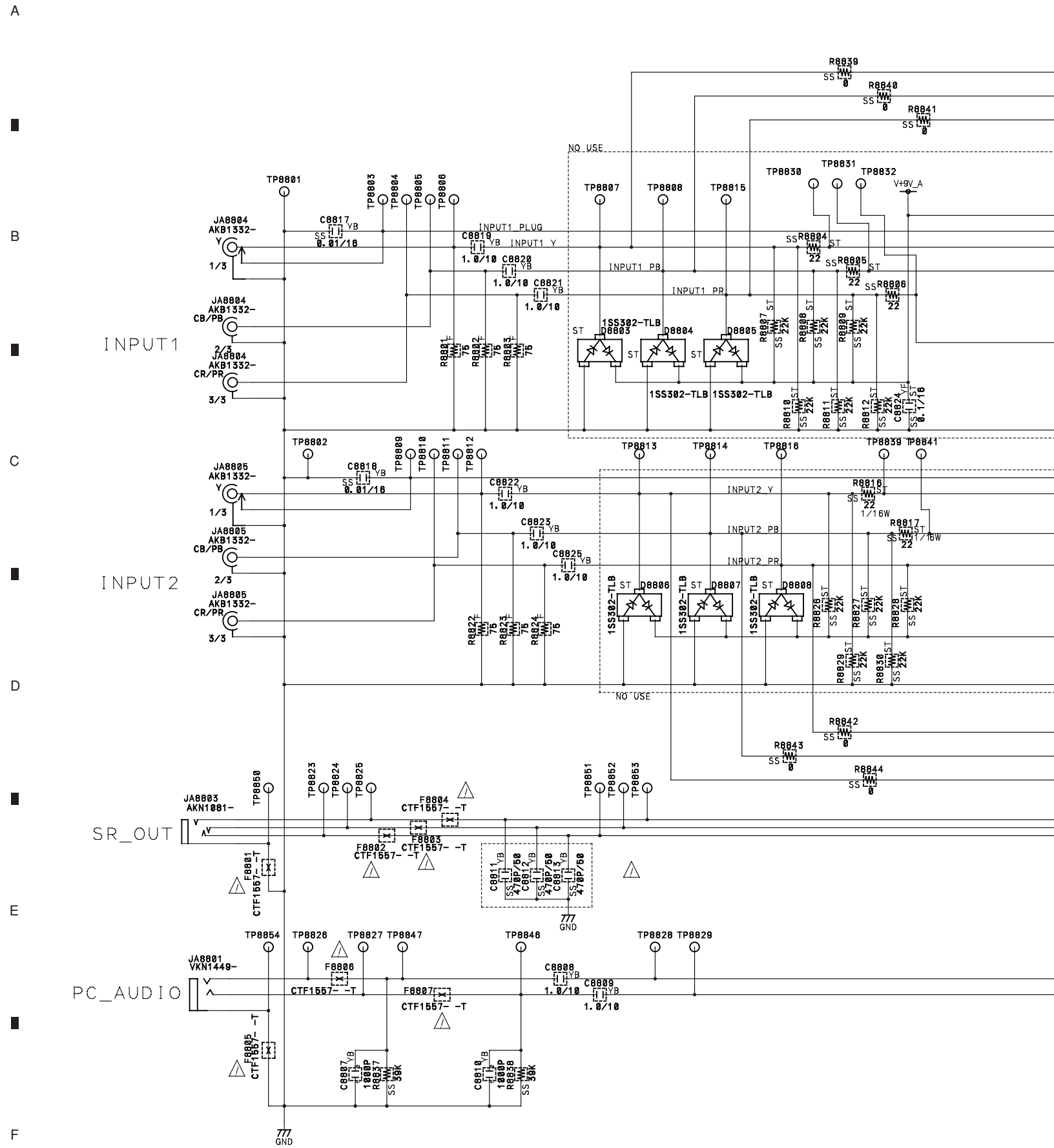

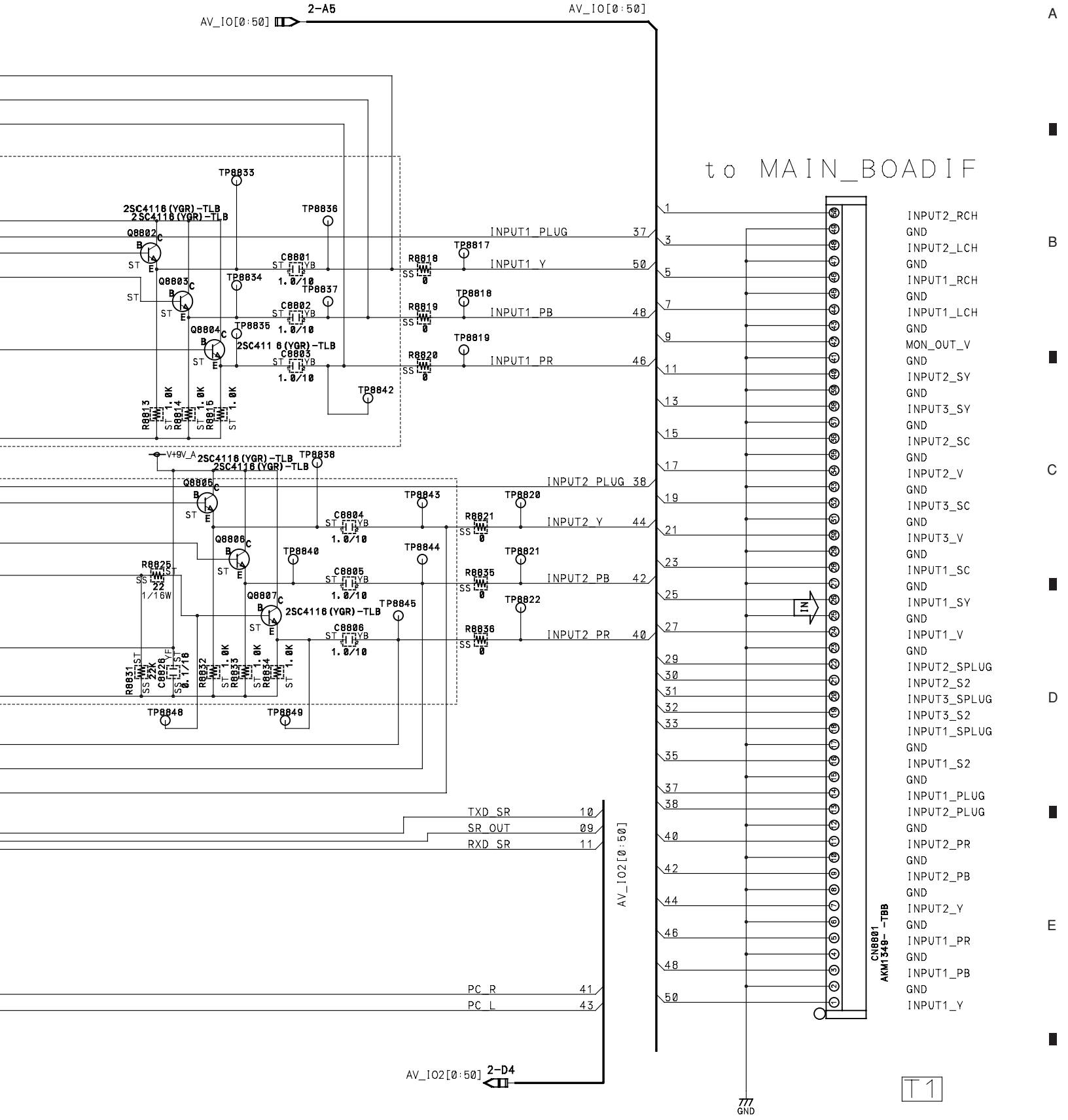
AV_IO[0:50]
2-A5
AV_IO[0:50]
to MAIN_BOADIF
INPUT1_PLUG 37
INPUT1_Y 50
INPUT1_PB 48
INPUT1_PR 46
INPUT2_PLUG 38
INPUT2_Y 44
INPUT2_PB 42
INPUT2_PR 40
TXD_SR 10
SR_OUT 09
RXD_SR 11
PC_R 41
PC_L 43
AV_IO2[0:50]
2-D4
CN8801
AKM1349- -TBB
INPUT2_RCH
GND
INPUT2_LCH
GND
INPUT1_RCH
GND
INPUT1_LCH
GND
MON_OUT_V
GND
INPUT2_SY
GND
INPUT3_SY
GND
INPUT2_SC
GND
INPUT2_V
GND
INPUT3_SC
GND
INPUT3_V
GND
INPUT1_SC
GND
INPUT1_SY
GND
INPUT1_V
GND
INPUT2_SPLUG
INPUT2_S2
INPUT3_SPLUG
INPUT3_S2
INPUT1_SPLUG
GND
INPUT1_S2
GND
INPUT1_PLUG
INPUT2_PLUG
GND
INPUT2_PR
GND
INPUT2_PB
GND
INPUT2_Y
GND
INPUT1_PR
GND
INPUT1_PB
GND
INPUT1_Y
GND
T1

9.12 DTV TUNER BOARD (1/16)

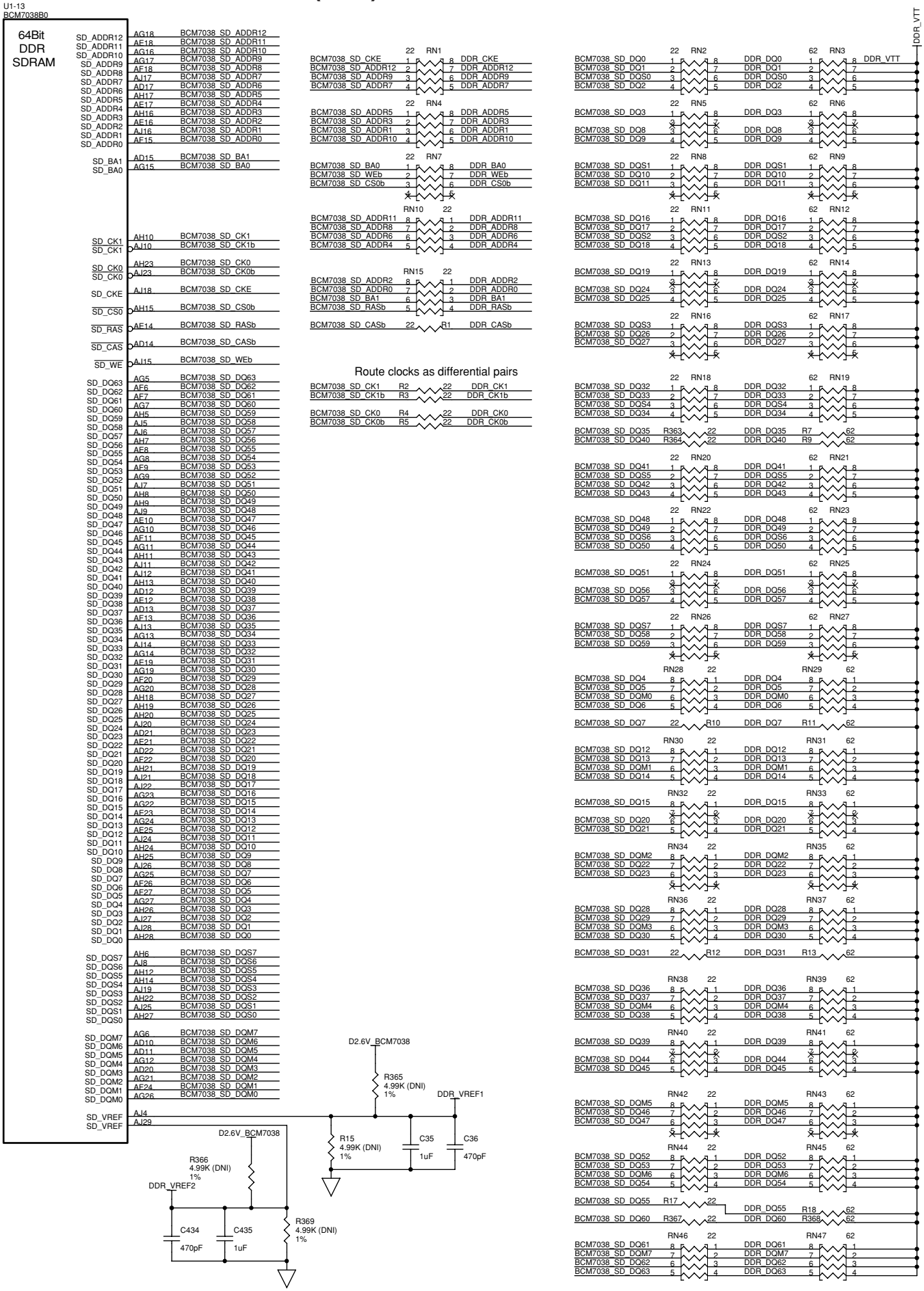

DTV MB ASSY (1/16)

• DDR TERM/CONN BLOCK

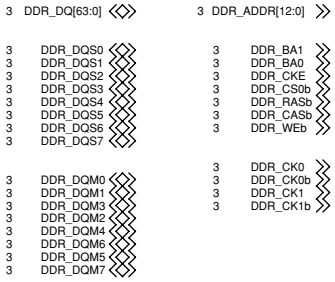

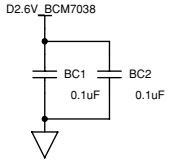

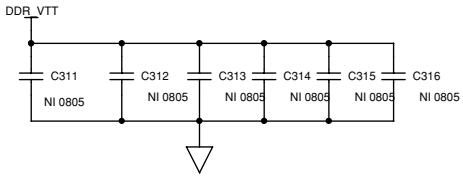

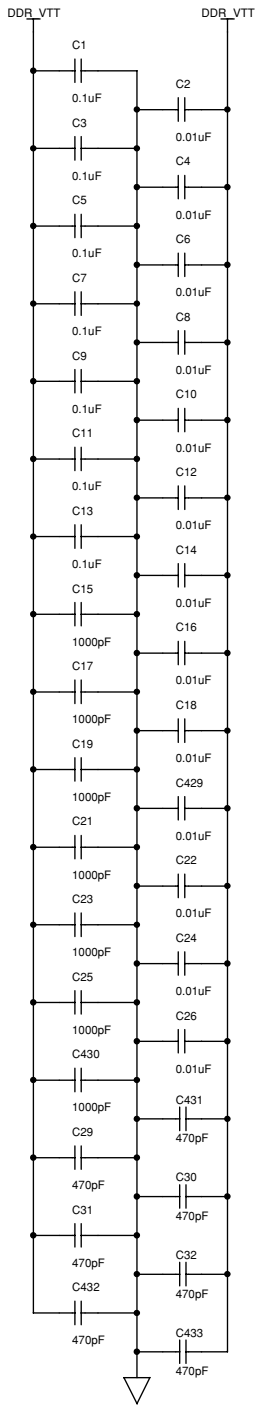

New DDR routing rules:

All timing is relative the CLK/CLKb that arrive at the destination DDR SDRAM chip.

1) X = CLK/CLKb should be a matched differential pair with a length < 4"

2) Address and control should be X +/- 0.75" (or 100 ps)
3) DQS and DQM should be X +/- 0.75" (or 100 ps)
4) All DQs should match corresponding byte lane DQS/DQMs within +/- 0.20" (or 30 ps)

5) Place 22 ohm resisters on this page near BCM7038.

6) Place 62 ohm resisters for DQ signals midpoint between BCM7038 and DDR SDRAM

7) Place DDR_VREF1/2 resistor dividers near BCM7038

8) Trace impedances need to be 60 ohms +/- 10% (54-66 ohms)

9) Route VREF with 30-mil trace and at least 1 high quality ceramic bypass capacitor for each connection to a device.

10) All traces should have a >= 3 to 1 spacing ratio fom the reference GND/PWR layer. (e.g. 15 mil line-to-line spacing for a 5 mil dielectric thickness)

9.13 DTV MB ASSY (2/16)

DTV MB ASSY (2/16)

- DDR-SDRAM BLOCK

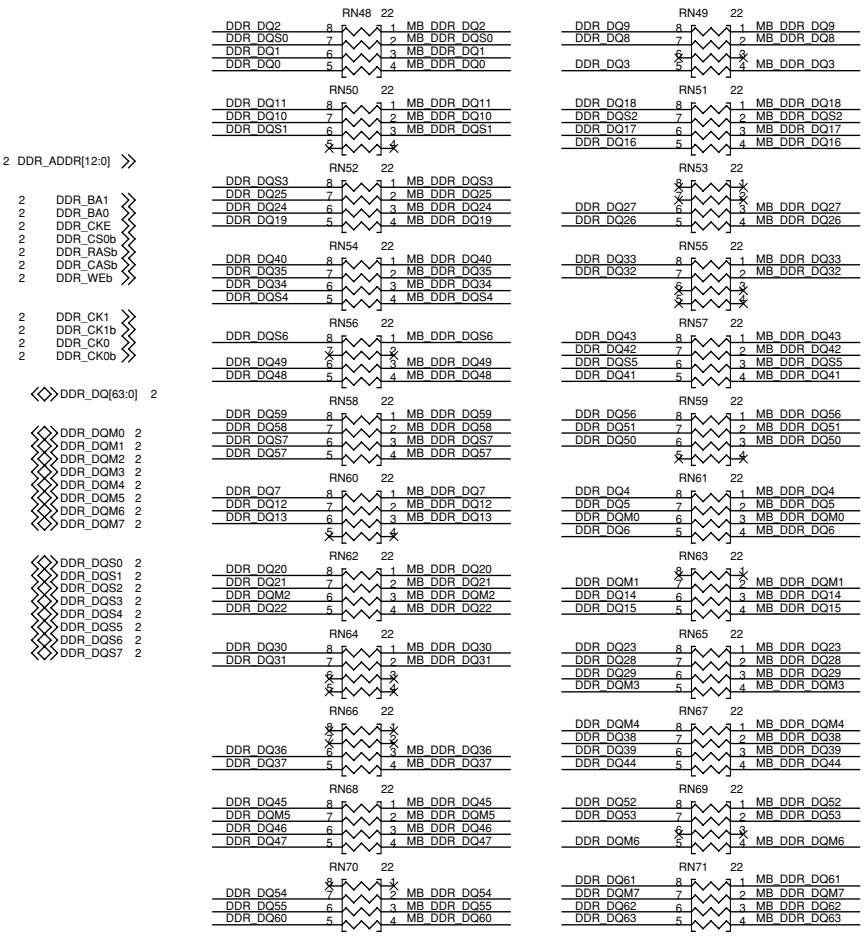

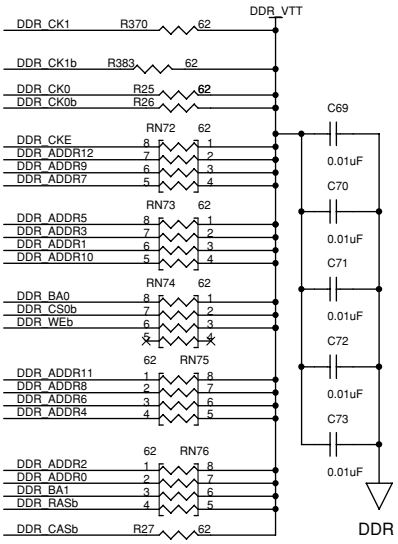

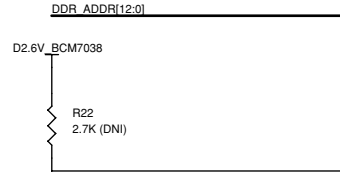

DDR_ADDR[12:0]

DDR routing rules:

---

1) DQ/DQM skew within bytelane (DQ[7:0], DQ[15:8], DQ[23:16], DQ[31:24]) should be +/-100 mil w.r.t DQS
2) DQS delay for a particular bytelane shall be +/-250 mil w.r.t clk
3) DQS skew across all bytelanes should be less than 250 mil
4) Address & cntrl shall be +/-500 mil w.r.t clk
5) Place 22 ohm resisters on this page near DDR SDRAM.
6) Place 51 ohm resisters for Addr/Cntrl signals at the end of the line near the DDR SDRAM
7) Place DDR_VREF resistor dividers near BCM7038
8) Trace impedances need to be 60 ohms +/- 10% (54-66 ohms)
9) Route VREF with 30-mil trace and 1 high quality ceramic bypass capacitor for each connection to a device.

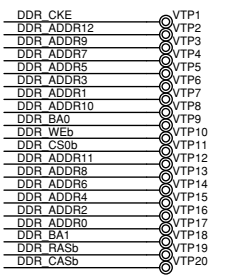

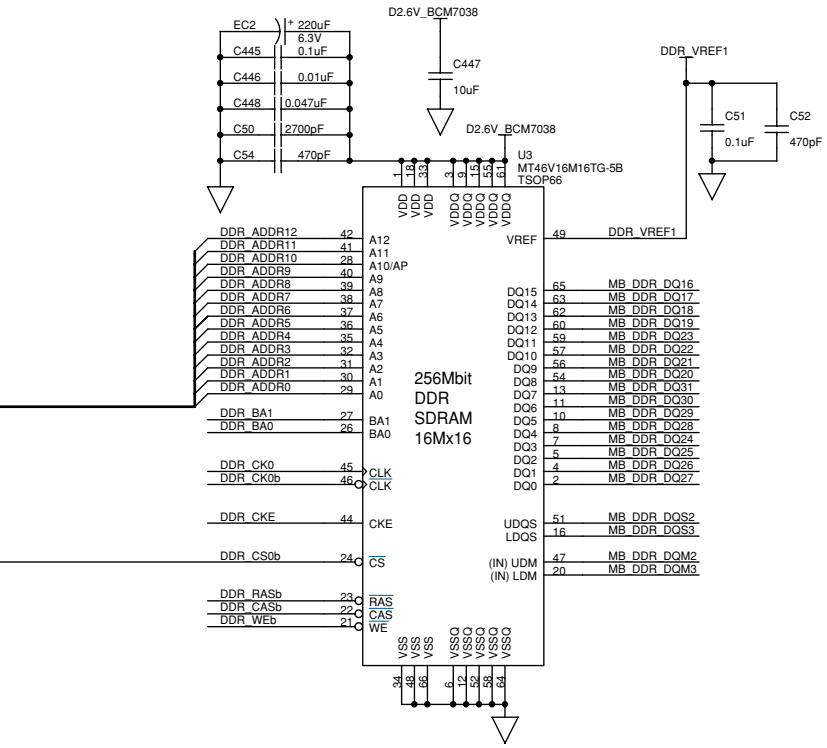
EC2
220uF
6.3V
C445 0.1uF
C446 0.01uF
C448 0.047uF
C50 2700pF
C54 470pF
D2.6V_BCM7038
C447
10uF
D2.6V_BCM7038
U3
MT46V16M16TG-5B
TSOP66
DDR_VREF1
C51 0.1uF
C52 470pF
256Mbit
DDR
SDRAM
16Mx16
DDR_ADDR12
DDR_ADDR11
DDR_ADDR10
DDR_ADDR9
DDR_ADDR8
DDR_ADDR7
DDR_ADDR6
DDR_ADDR5
DDR_ADDR4
DDR_ADDR3
DDR_ADDR2
DDR_ADDR1
DDR_ADDR0
DDR_BA1
DDR_BA0
DDR_CK0
DDR_CK0b
DDR_CKE
DDR_CS0b
DDR_RASb
DDR_CASb
DDR_WEb
MB_DDR_DQ16
MB_DDR_DQ17
MB_DDR_DQ18
MB_DDR_DQ19
MB_DDR_DQ23
MB_DDR_DQ22
MB_DDR_DQ21
MB_DDR_DQ20
MB_DDR_DQ31
MB_DDR_DQ30
MB_DDR_DQ29
MB_DDR_DQ28
MB_DDR_DQ24
MB_DDR_DQ25
MB_DDR_DQ26
MB_DDR_DQ27
MB_DDR_DQS2
MB_DDR_DQS3
MB_DDR_DQM2
MB_DDR_DQM3

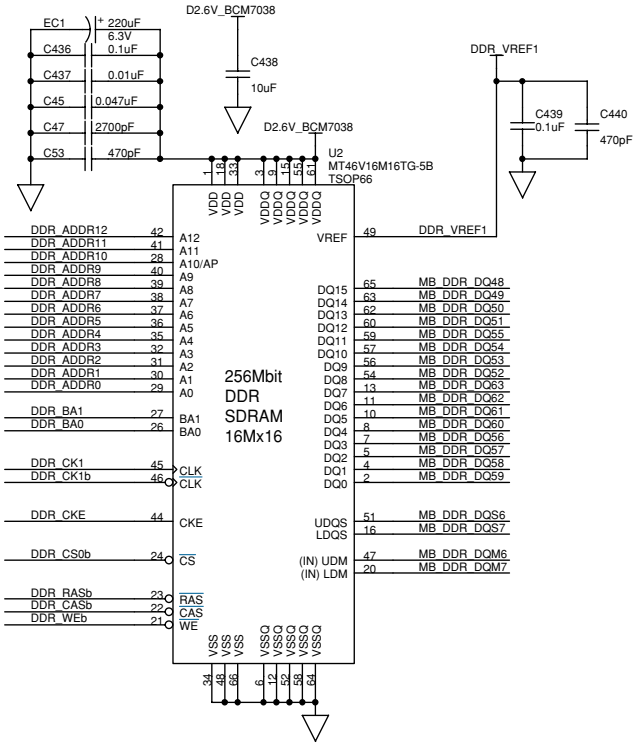
EC1
220uF
6.3V
C436 0.1uF
C437 0.01uF
C45 0.047uF
C47 2700pF
C53 470pF
D2.6V_BCM7038
C438
10uF
D2.6V_BCM7038
U2
MT46V16M16TG-5B
TSOP66
DDR_VREF1
C439 0.1uF
C440 470pF
256Mbit
DDR
SDRAM
16Mx16
DDR_ADDR12
DDR_ADDR11
DDR_ADDR10
DDR_ADDR9
DDR_ADDR8
DDR_ADDR7
DDR_ADDR6
DDR_ADDR5
DDR_ADDR4
DDR_ADDR3
DDR_ADDR2
DDR_ADDR1
DDR_ADDR0
DDR_BA1
DDR_BA0
DDR_CK1
DDR_CK1b
DDR_CKE
DDR_CS0b
DDR_RASb
DDR_CASb
DDR_WEb
MB_DDR_DQ48
MB_DDR_DQ49
MB_DDR_DQ50
MB_DDR_DQ51
MB_DDR_DQ55
MB_DDR_DQ54
MB_DDR_DQ53
MB_DDR_DQ52
MB_DDR_DQ63
MB_DDR_DQ62
MB_DDR_DQ61
MB_DDR_DQ60
MB_DDR_DQ56
MB_DDR_DQ57
MB_DDR_DQ58
MB_DDR_DQ59
MB_DDR_DQS6
MB_DDR_DQS7
MB_DDR_DQM6
MB_DDR_DQM7

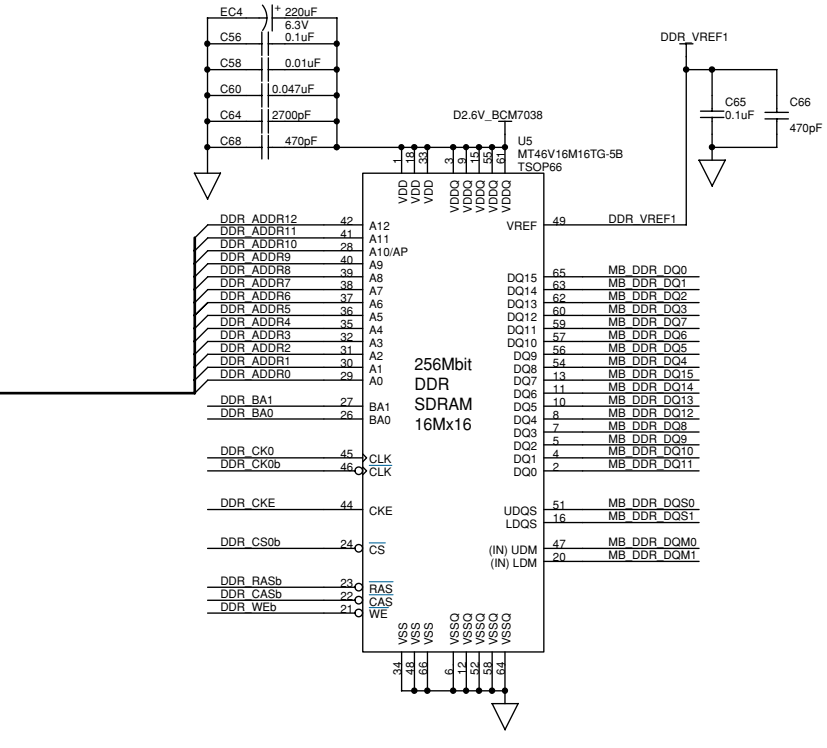
EC4
220uF
6.3V
C56 0.1uF
C58 0.01uF
C60 0.047uF
C64 2700pF
C68 470pF
D2.6V_BCM7038
U5
MT46V16M16TG-5B
TSOP66
DDR_VREF1
C65 0.1uF
C66 470pF
256Mbit
DDR
SDRAM
16Mx16
DDR_ADDR12
DDR_ADDR11
DDR_ADDR10
DDR_ADDR9
DDR_ADDR8
DDR_ADDR7
DDR_ADDR6
DDR_ADDR5
DDR_ADDR4
DDR_ADDR3
DDR_ADDR2
DDR_ADDR1
DDR_ADDR0
DDR_BA1
DDR_BA0
DDR_CK0
DDR_CK0b
DDR_CKE
DDR_CS0b
DDR_RASb
DDR_CASb
DDR_WEb
MB_DDR_DQ0
MB_DDR_DQ1
MB_DDR_DQ2
MB_DDR_DQ3
MB_DDR_DQ7
MB_DDR_DQ6
MB_DDR_DQ5
MB_DDR_DQ4
MB_DDR_DQ15
MB_DDR_DQ14
MB_DDR_DQ13
MB_DDR_DQ12
MB_DDR_DQ8
MB_DDR_DQ9
MB_DDR_DQ10
MB_DDR_DQ11
MB_DDR_DQS0
MB_DDR_DQS1
MB_DDR_DQM0
MB_DDR_DQM1

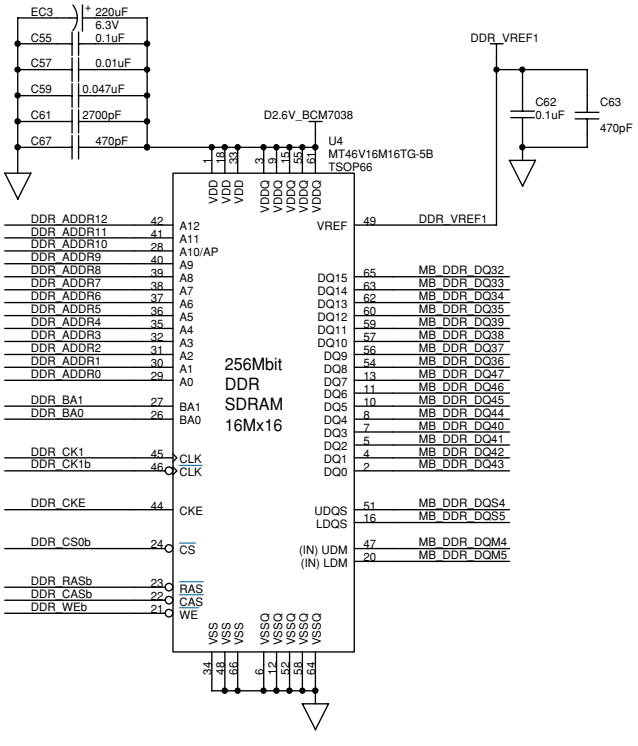
EC3
220uF
6.3V
C55 0.1uF
C57 0.01uF
C59 0.047uF
C61 2700pF
C67 470pF
D2.6V_BCM7038
U4
MT46V16M16TG-5B
TSOP66
DDR_VREF1
C62 0.1uF
C63 470pF
256Mbit
DDR
SDRAM
16Mx16
DDR_ADDR12
DDR_ADDR11
DDR_ADDR10
DDR_ADDR9
DDR_ADDR8
DDR_ADDR7
DDR_ADDR6
DDR_ADDR5
DDR_ADDR4
DDR_ADDR3
DDR_ADDR2
DDR_ADDR1
DDR_ADDR0
DDR_BA1
DDR_BA0
DDR_CK1
DDR_CK1b
DDR_CKE
DDR_CS0b
DDR_RASb
DDR_CASb
DDR_WEb
MB_DDR_DQ32
MB_DDR_DQ33
MB_DDR_DQ34
MB_DDR_DQ35
MB_DDR_DQ39
MB_DDR_DQ38
MB_DDR_DQ37
MB_DDR_DQ36
MB_DDR_DQ47
MB_DDR_DQ46
MB_DDR_DQ45
MB_DDR_DQ44
MB_DDR_DQ40
MB_DDR_DQ41
MB_DDR_DQ42
MB_DDR_DQ43
MB_DDR_DQS4
MB_DDR_DQS5
MB_DDR_DQM4
MB_DDR_DQM5

9.14 DTV MB ASSY (3/16)

DTV MB ASSY (3/16)

- DVO,.PIN_STRAPOPTION BLOCK

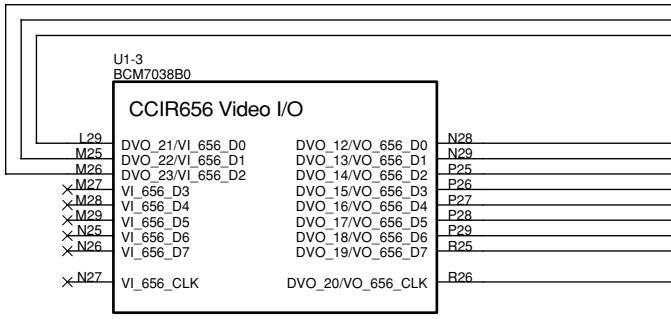

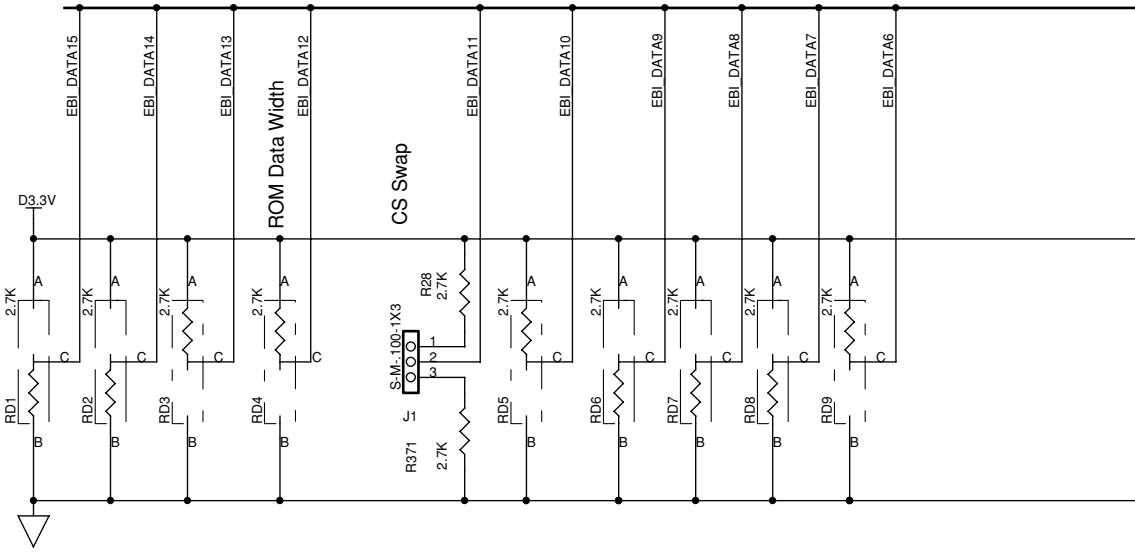

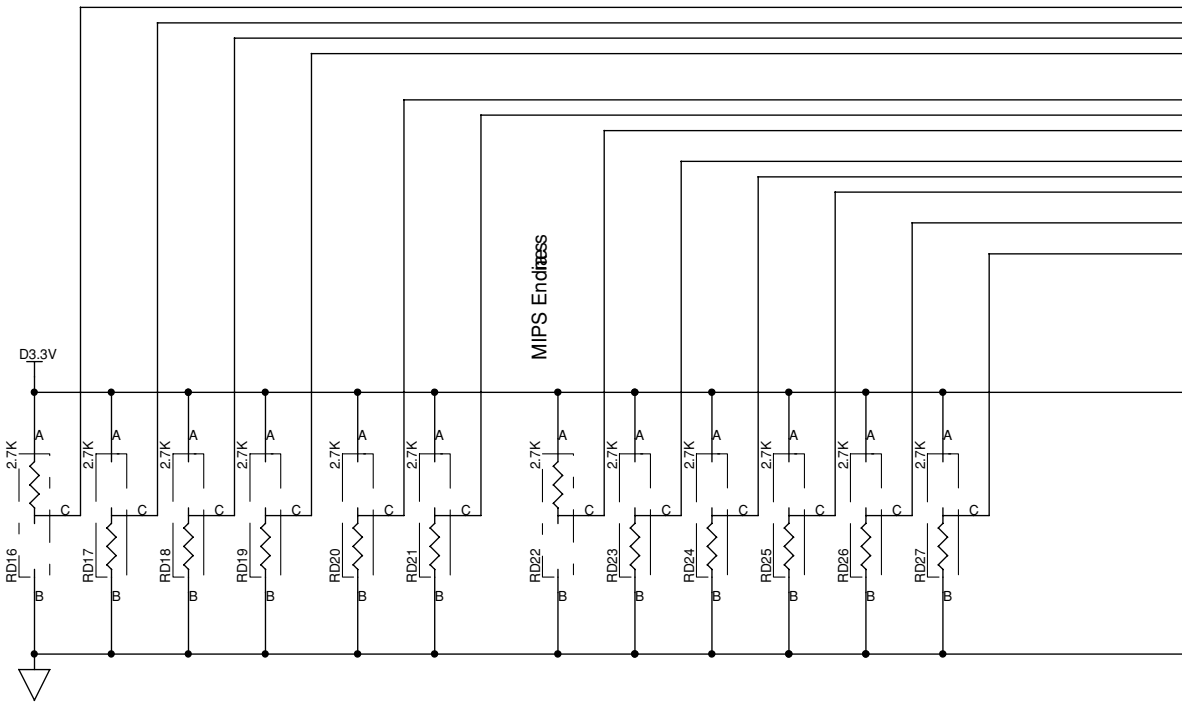

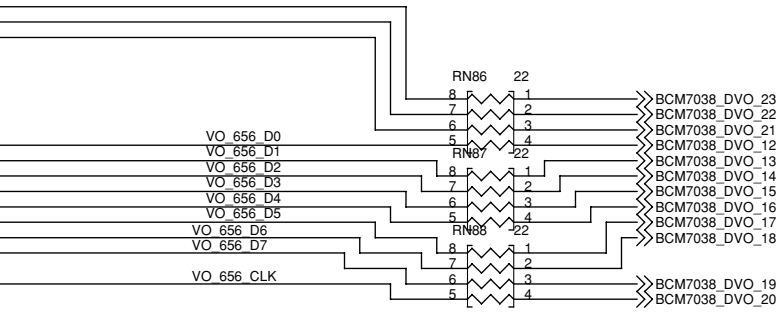
RN86 22
RN87 22
RN88 22
VO_656_D0
VO_656_D1
VO_656_D2
VO_656_D3
VO_656_D4
VO_656_D5
VO_656_D6
VO_656_D7
VO_656_CLK
BCM7038_DVO_23
BCM7038_DVO_22
BCM7038_DVO_21
BCM7038_DVO_12
BCM7038_DVO_13
BCM7038_DVO_14
BCM7038_DVO_15
BCM7038_DVO_16
BCM7038_DVO_17
BCM7038_DVO_18
BCM7038_DVO_19
BCM7038_DVO_20

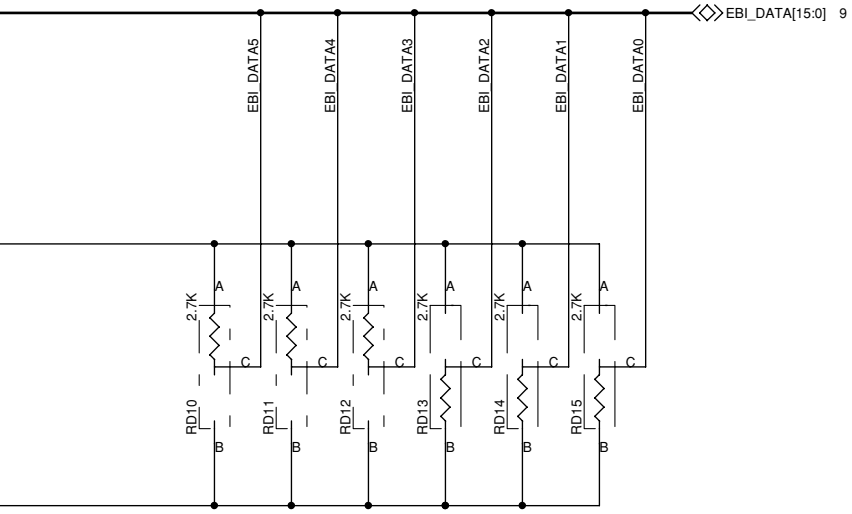
EBI_DATA[15:0] 9
EBI_DATA5
EBI_DATA4
EBI_DATA3
EBI_DATA2
EBI_DATA1
EBI_DATA0
2.7K
RD10
RD11
RD12
RD13
RD14
RD15

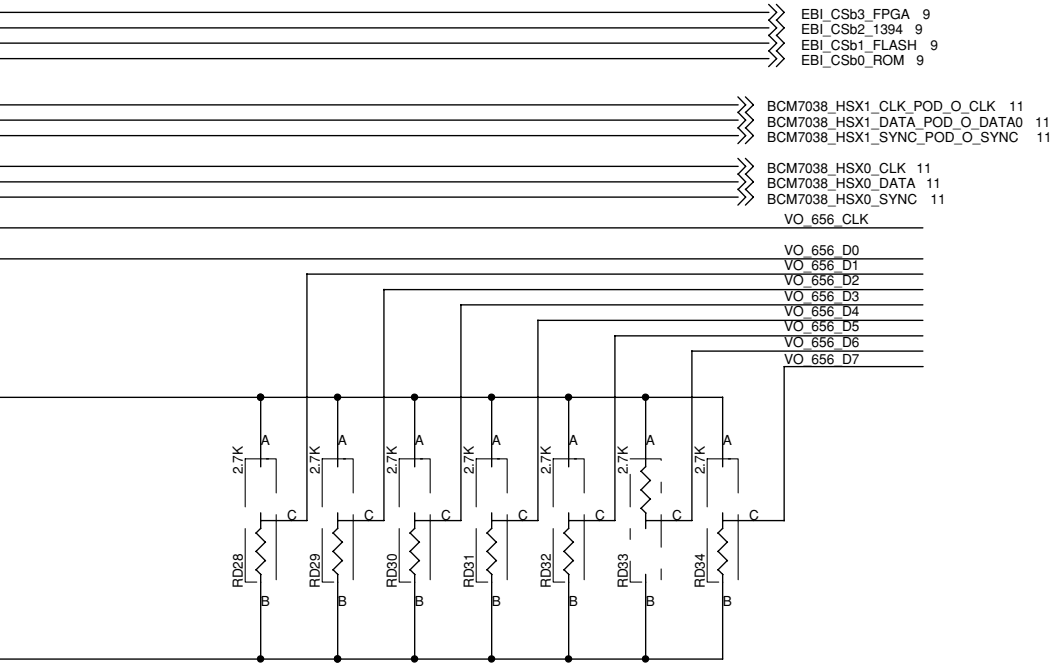
EBI_CSb3_FPGA 9
EBI_CSb2_1394 9
EBI_CSb1_FLASH 9
EBI_CSb0_ROM 9
BCM7038_HSX1_CLK_POD_O_CLK 11
BCM7038_HSX1_DATA_POD_O_DATA0 11
BCM7038_HSX1_SYNC_POD_O_SYNC 11
BCM7038_HSX0_CLK 11
BCM7038_HSX0_DATA 11
BCM7038_HSX0_SYNC 11
VO_656_CLK
VO_656_D0
VO_656_D1
VO_656_D2
VO_656_D3
VO_656_D4
VO_656_D5
VO_656_D6
VO_656_D7
2.7K
RD28
RD29
RD30
RD31
RD32
RD33
RD34

9.15 DTV MB ASSY (4/16)

DTV MB ASSY (4/16)

- AUDIO Buffer BLOCK

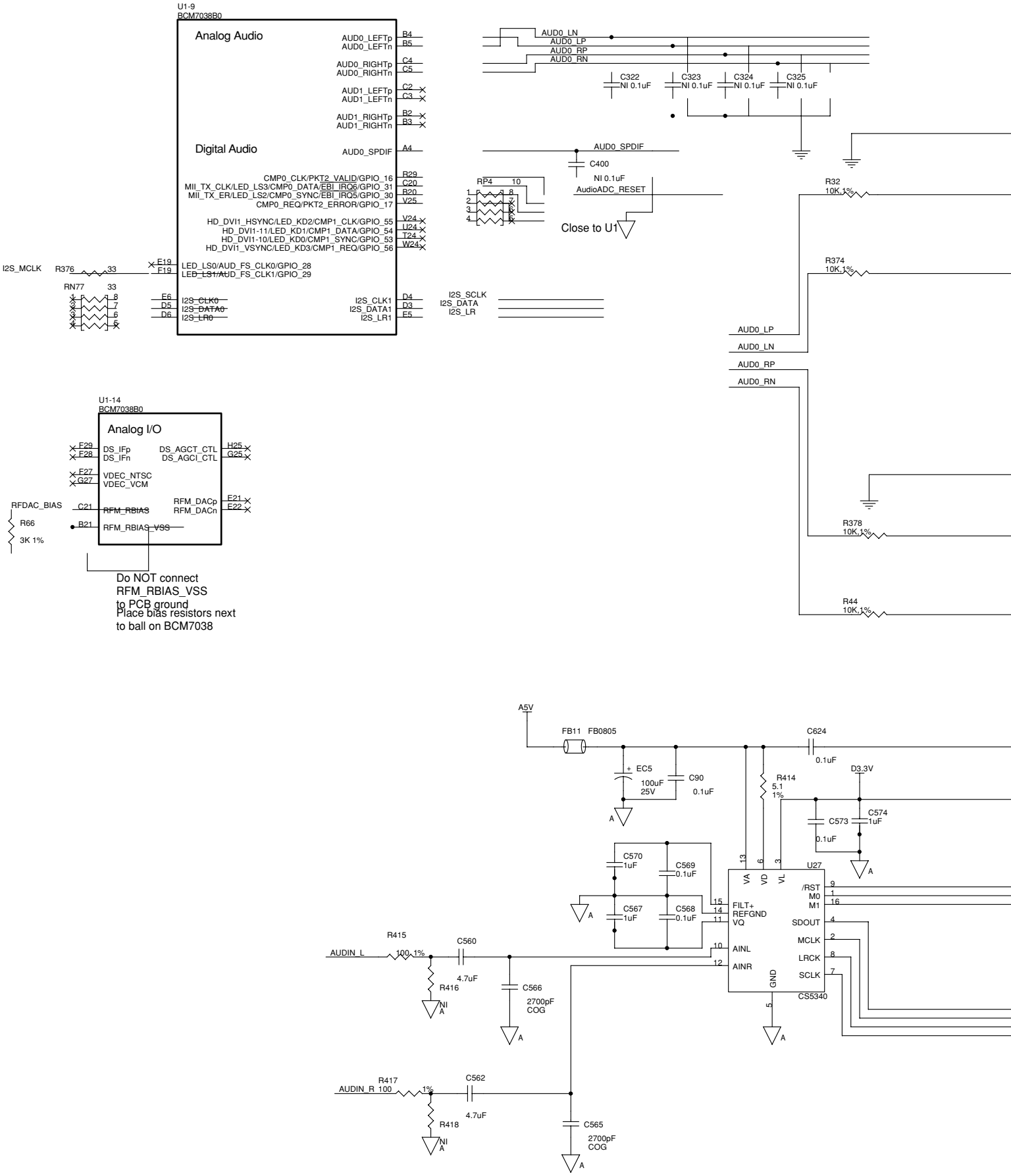

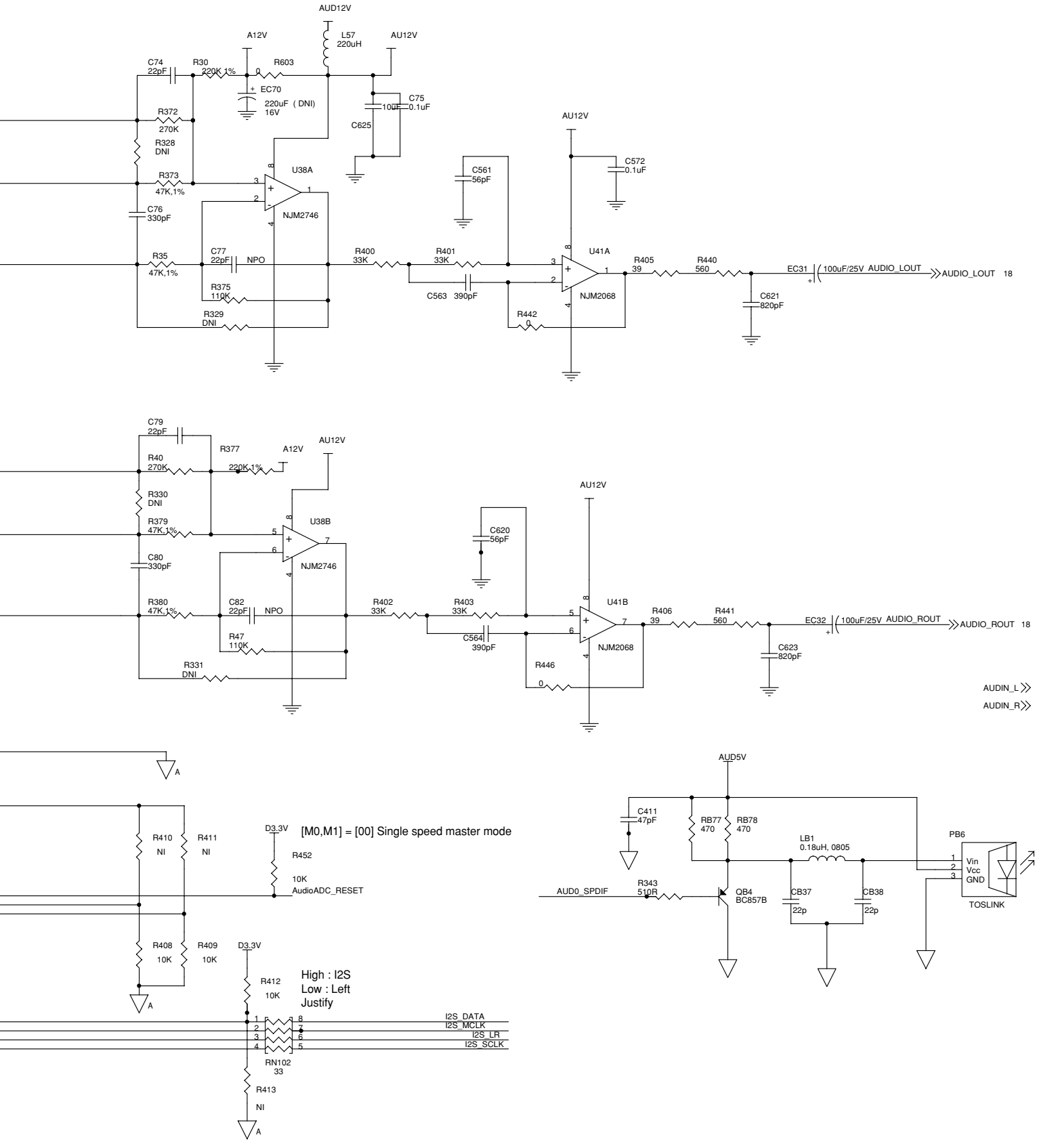
AUD12V
A12V
L57
220uH
AU12V
C74
22pF
R30
220K,1%
R603
EC70
220uF (DNI)
16V
C75
0.1uF
10uF
C625
R372
270K
R328
DNI
U38A
NJM2746
C561
56pF
AU12V
C572
0.1uF
R373
47K,1%
C76
330pF
R35
47K,1%
C77
22pF
NPO
R400
33K
R401
33K
U41A
NJM2068
R405
39
R440
560
EC31
100uF/25V
AUDIO_LOUT
AUDIO_LOUT 18
C621
820pF
R375
110K
R329
DNI
C563
390pF
R442
0
C79
22pF
R377
A12V
AU12V
R40
270K
220K,1%
R330
DNI
R379
47K,1%
U38B
NJM2746
C620
56pF
AU12V
C80
330pF
R380
47K,1%
C82
22pF
NPO
R402
33K
R403
33K
U41B
NJM2068
R406
39
R441
560
EC32
100uF/25V
AUDIO_ROUT
AUDIO_ROUT 18
C623
820pF
R47
110K
R331
DNI
C564
390pF
R446
0
AUDIN_L
AUDIN_R
A
R410
NI
R411
NI
D3.3V
[M0,M1] = [00] Single speed master mode
R452
10K
AudioADC_RESET
R408
10K
R409
10K
D3.3V
R412
10K
High : I2S
Low : Left
Justify
I2S_DATA
I2S_MCLK
I2S_LR
I2S_SCLK
RN102
33
R413
NI
A
AUD5V
C411
47pF
RB77
470
RB78
470
LB1
0.18uH, 0805
PB6
Vin
Vcc
GND
TOSLINK
AUD0_SPDIF
R343
510R
QB4
BC857B
CB37
22p
CB38
22p

9.16 DTV MB ASSY (5/16)

DTV MB ASSY (5/16)

- Video DAC output BLOCK

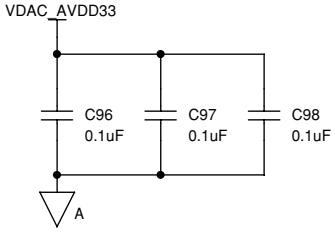

Route VDAC_AVDD33 as a wide trace or fill area on the top layer of the PCB all the way to the connector

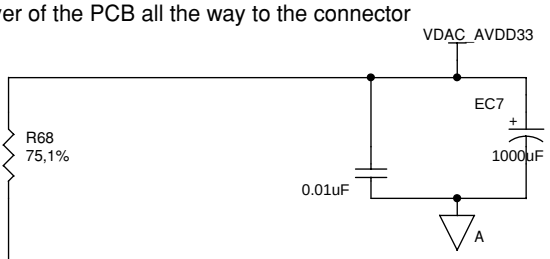

Place bias resisters near BCM7038 and try to shield them by GND.

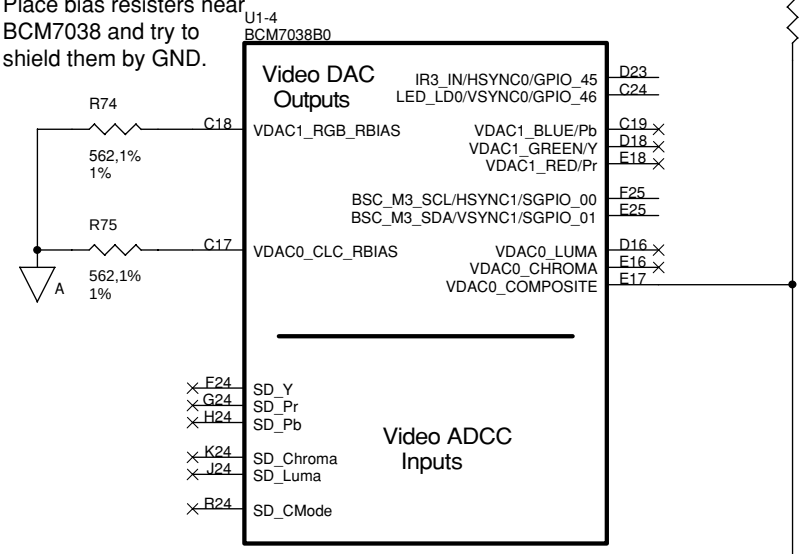

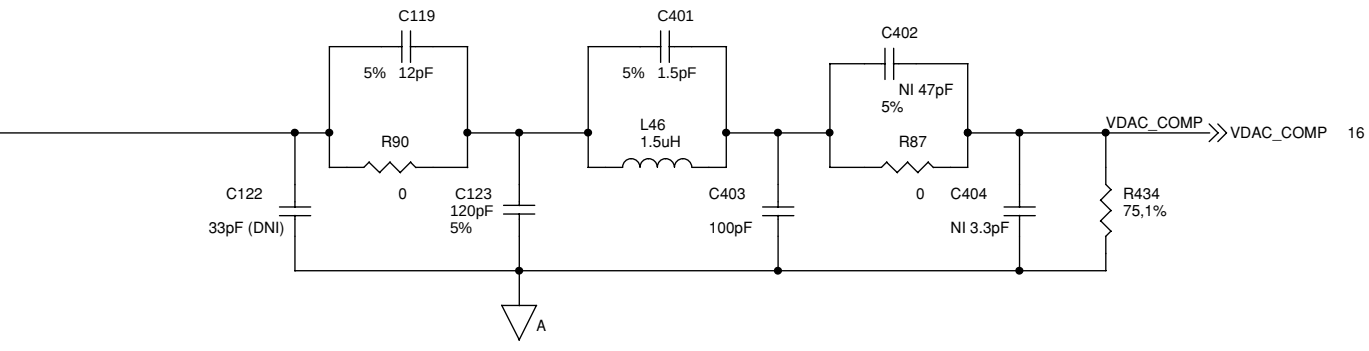
C119
5% 12pF
R90
0
C401
5% 1.5pF
L46
1.5uH
C402
NI 47pF
5%
R87
0
VDAC_COMP
VDAC_COMP 16
C122
33pF (DNI)
C123
120pF
5%
C403
100pF
C404
NI 3.3pF
R434
75,1%
A

9.17 DTV MB ASSY (6/16)

DTV MB ASSY (6/16)

• DVO BLOCK

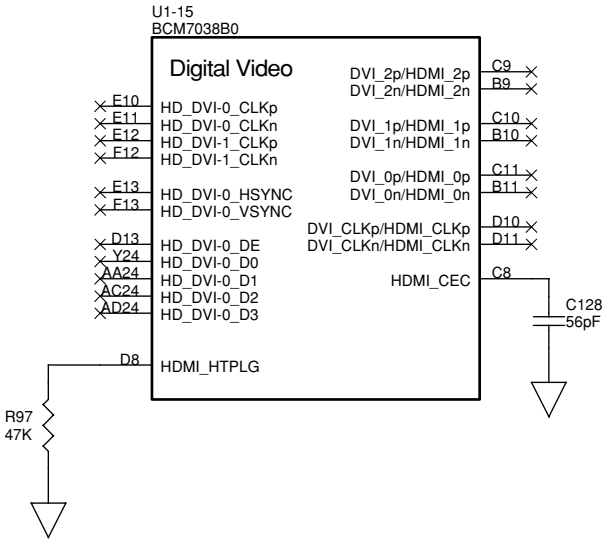

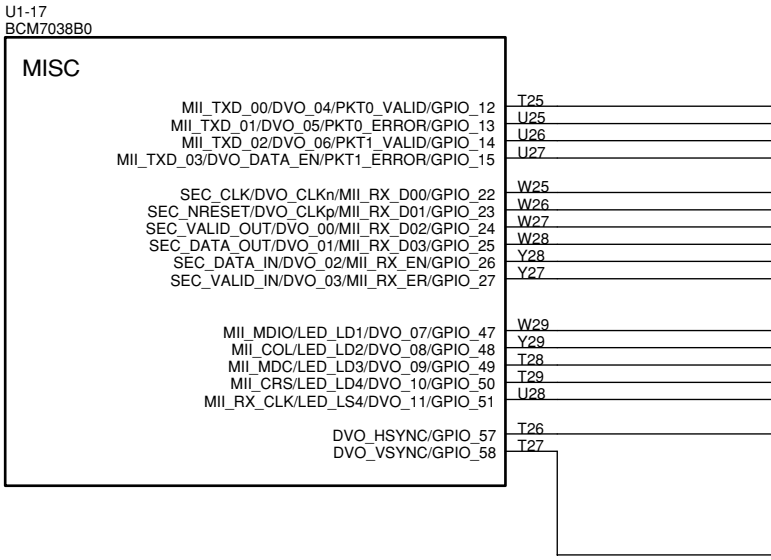

Place series resistors close to U1

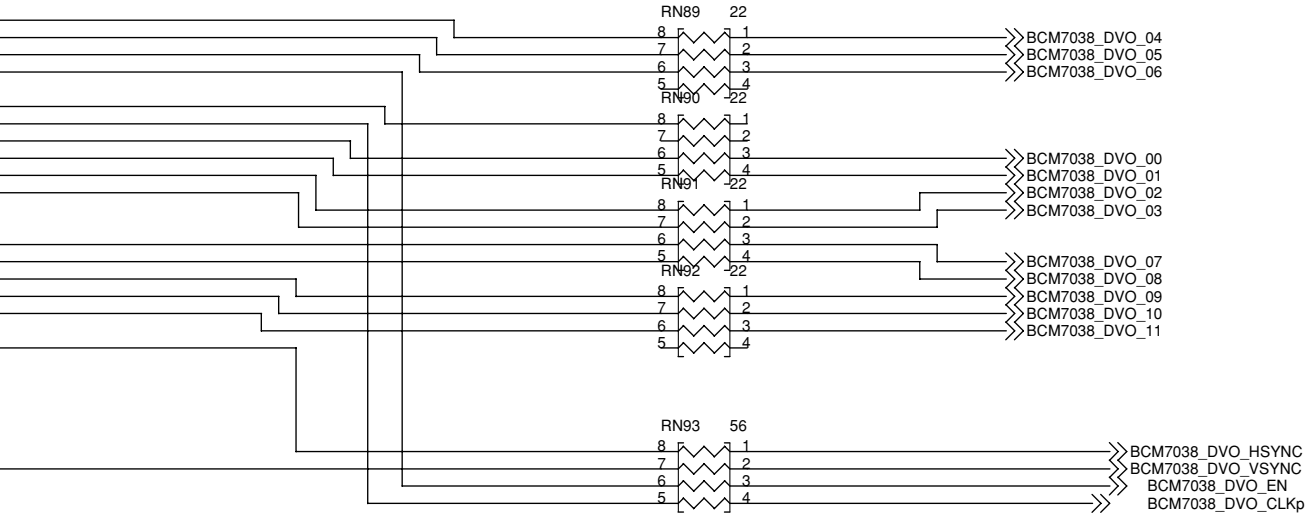

9.18 DTV MB ASSY (7/16)

DTV MB ASSY (7/16)

• PCI BLOCK

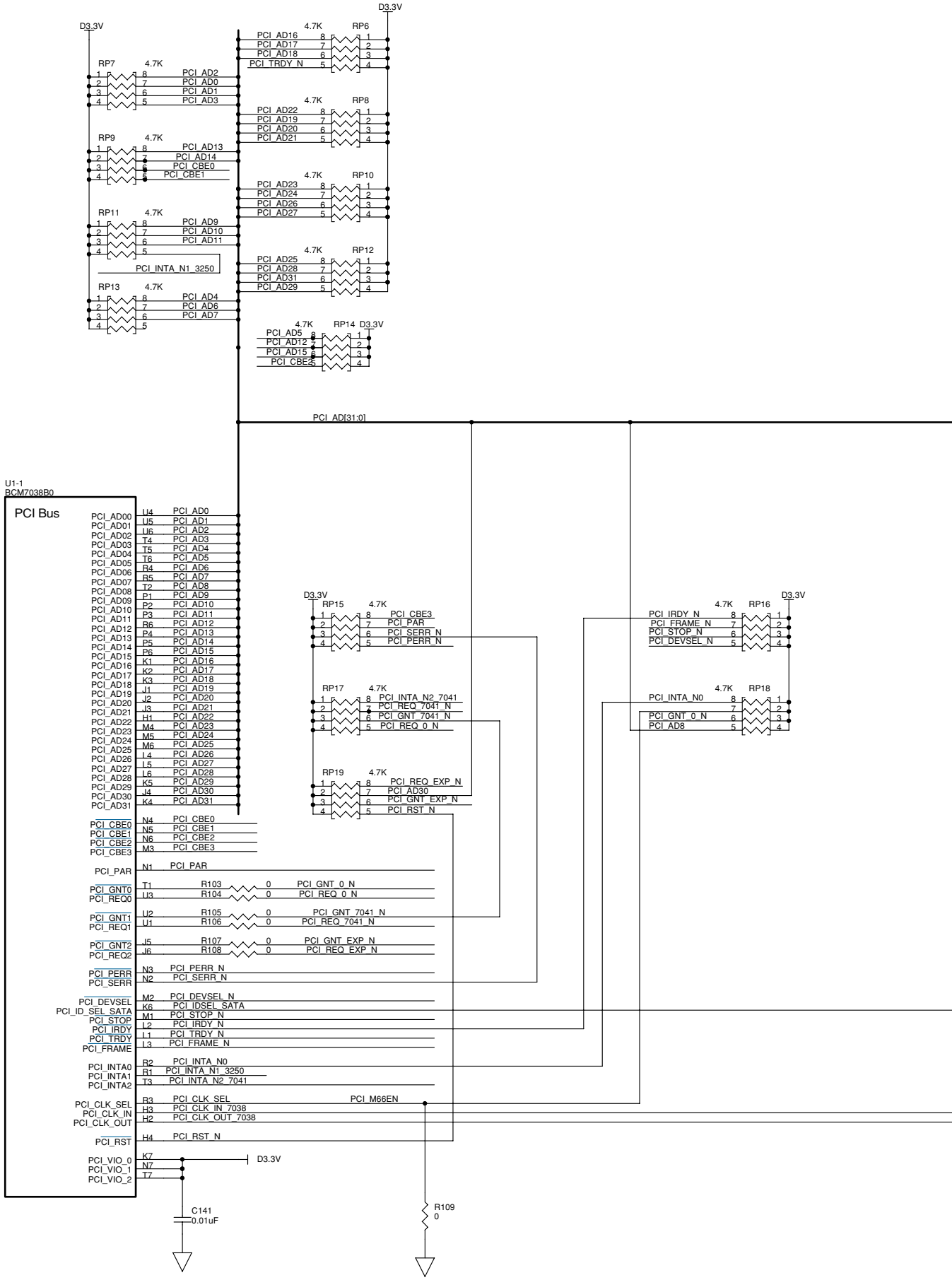

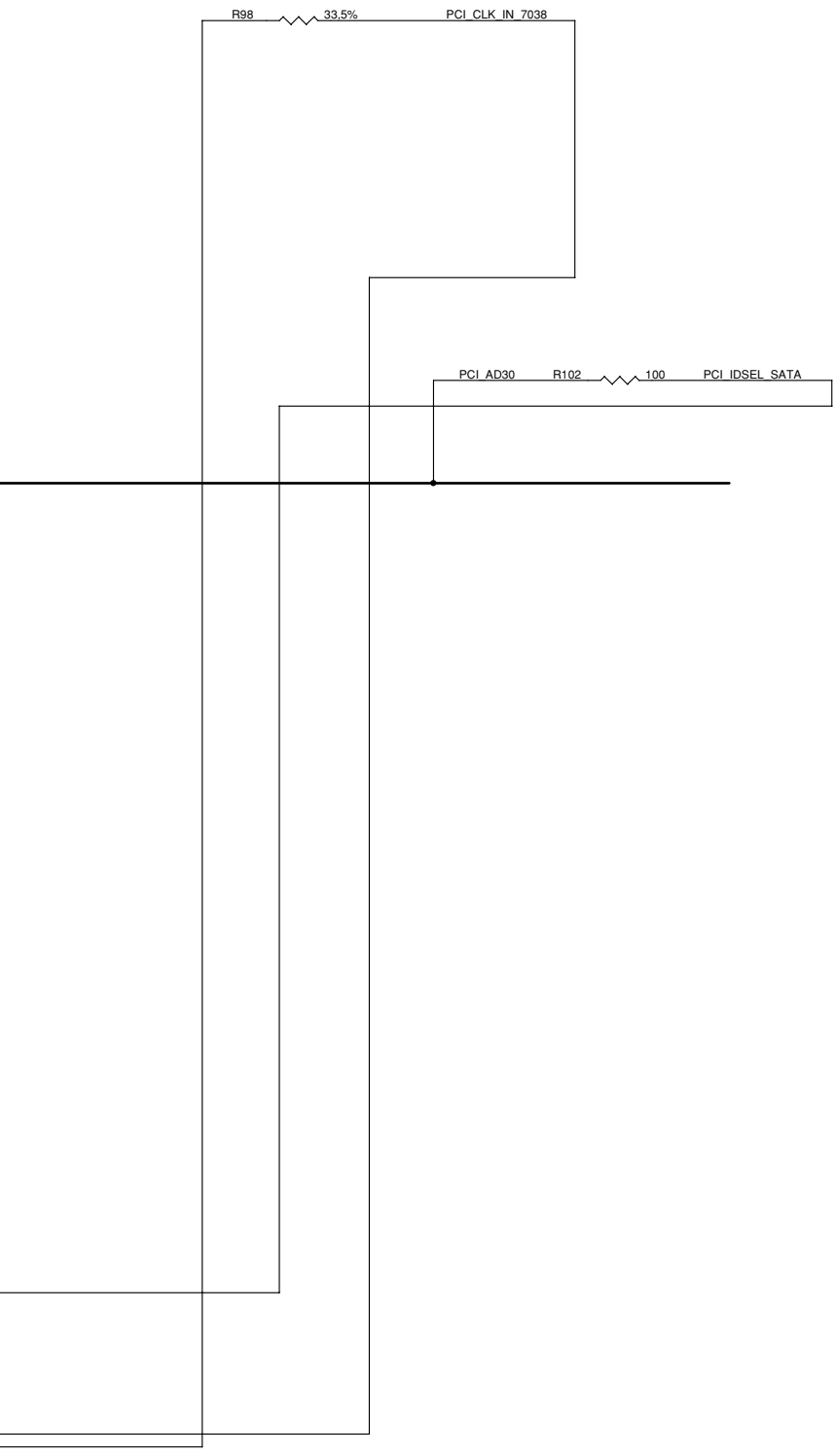

Place one of each of these

the VI/O pins: B19, B59,
A59, A16, and A10

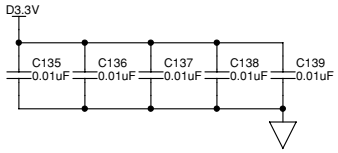

9.19 DTV MB ASSY (8/16)

DTV MB ASSY (8/16)

• FBI,.RESET BLOCK

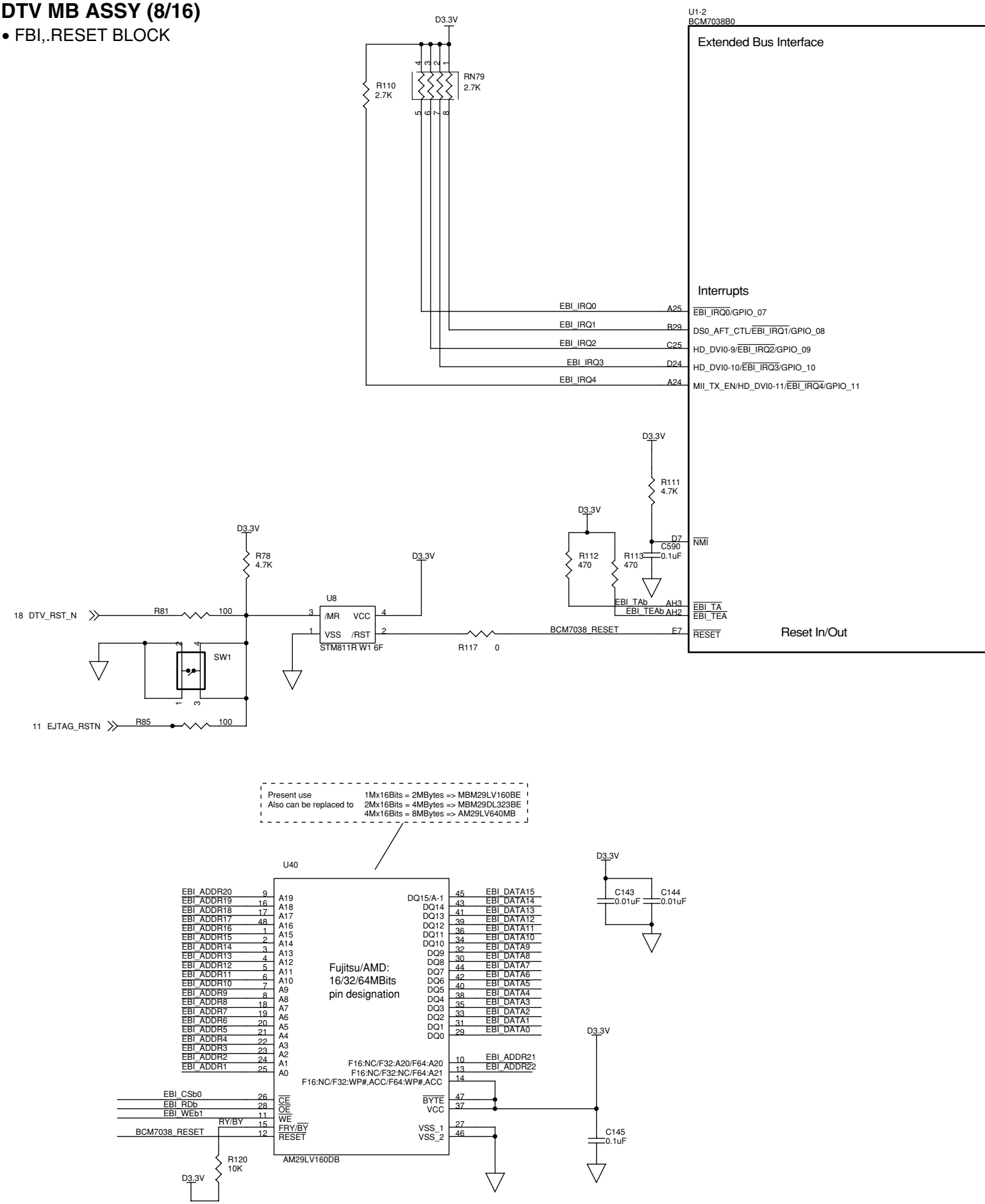

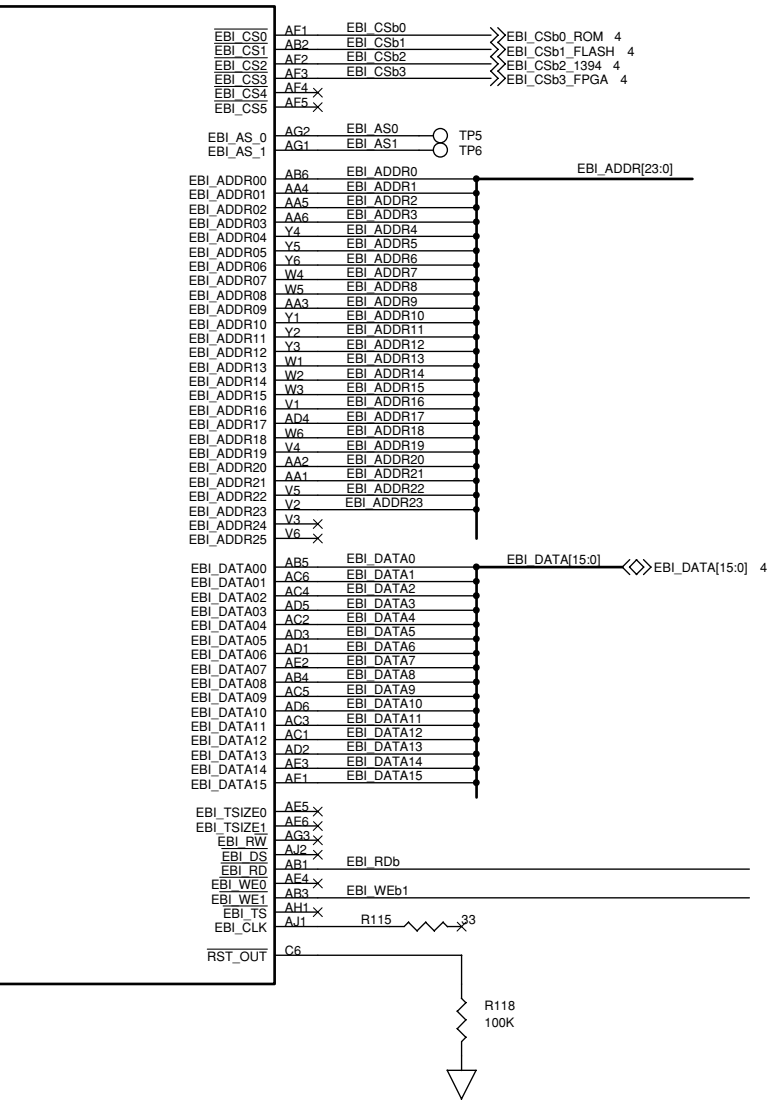
EBI_CS0
EBI_CS1
EBI_CS2
EBI_CS3
EBI_CS4
EBI_CS5
AF1 EBI_CSb0
AB2 EBI_CSb1
AF2 EBI_CSb2
AF3 EBI_CSb3
AF4
AF5
EBI_CSb0_ROM 4
EBI_CSb1_FLASH 4
EBI_CSb2_1394 4
EBI_CSb3_FPGA 4
EBI_AS_0
EBI_AS_1
AG2 EBI_AS0
AG1 EBI_AS1
TP5
TP6
EBI_ADDR[23:0]
EBI_ADDR00 AB6 EBI_ADDR0
EBI_ADDR01 AA4 EBI_ADDR1
EBI_ADDR02 AA5 EBI_ADDR2
EBI_ADDR03 AA6 EBI_ADDR3
EBI_ADDR04 Y4 EBI_ADDR4
EBI_ADDR05 Y5 EBI_ADDR5
EBI_ADDR06 Y6 EBI_ADDR6
EBI_ADDR07 W4 EBI_ADDR7
EBI_ADDR08 W5 EBI_ADDR8
EBI_ADDR09 AA3 EBI_ADDR9
EBI_ADDR10 Y1 EBI_ADDR10
EBI_ADDR11 Y2 EBI_ADDR11
EBI_ADDR12 Y3 EBI_ADDR12
EBI_ADDR13 W1 EBI_ADDR13
EBI_ADDR14 W2 EBI_ADDR14
EBI_ADDR15 W3 EBI_ADDR15
EBI_ADDR16 V1 EBI_ADDR16
EBI_ADDR17 AD4 EBI_ADDR17
EBI_ADDR18 W6 EBI_ADDR18
EBI_ADDR19 V4 EBI_ADDR19
EBI_ADDR20 AA2 EBI_ADDR20
EBI_ADDR21 AA1 EBI_ADDR21
EBI_ADDR22 V5 EBI_ADDR22
EBI_ADDR23 V2 EBI_ADDR23
EBI_ADDR24 V3
EBI_ADDR25 V6
EBI_DATA00 AB5 EBI_DATA0
EBI_DATA01 AC6 EBI_DATA1
EBI_DATA02 AC4 EBI_DATA2
EBI_DATA03 AD5 EBI_DATA3
EBI_DATA04 AC2 EBI_DATA4
EBI_DATA05 AD3 EBI_DATA5
EBI_DATA06 AD1 EBI_DATA6
EBI_DATA07 AE2 EBI_DATA7
EBI_DATA08 AB4 EBI_DATA8
EBI_DATA09 AC5 EBI_DATA9
EBI_DATA10 AD6 EBI_DATA10
EBI_DATA11 AC3 EBI_DATA11
EBI_DATA12 AC1 EBI_DATA12
EBI_DATA13 AD2 EBI_DATA13
EBI_DATA14 AE3 EBI_DATA14
EBI_DATA15 AF1 EBI_DATA15
EBI_DATA[15:0]
EBI_DATA[15:0] 4
EBI_TSIZE0 AE5
EBI_TSIZE1 AF6
EBI_RW AG3
EBI_DS AJ2
EBI_RD AB1 EBI_RDb
EBI_WE0 AE4
EBI_WE1 AB3 EBI_WEb1
EBI_TS AH1
EBI_CLK AJ1
R115 33
RST_OUT C6
R118
100K

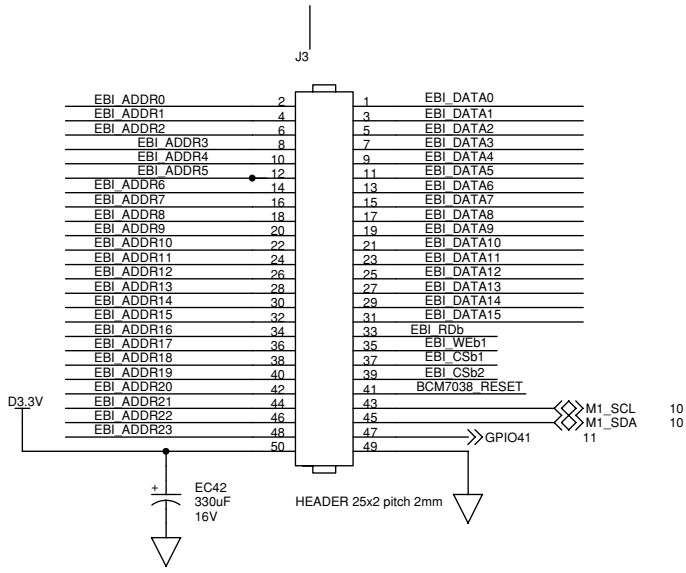
J3
EBI_ADDR0 2
EBI_ADDR1 4
EBI_ADDR2 6
EBI_ADDR3 8
EBI_ADDR4 10
EBI_ADDR5 12
EBI_ADDR6 14
EBI_ADDR7 16
EBI_ADDR8 18
EBI_ADDR9 20
EBI_ADDR10 22
EBI_ADDR11 24
EBI_ADDR12 26
EBI_ADDR13 28
EBI_ADDR14 30
EBI_ADDR15 32
EBI_ADDR16 34
EBI_ADDR17 36
EBI_ADDR18 38
EBI_ADDR19 40
EBI_ADDR20 42
EBI_ADDR21 44
EBI_ADDR22 46
EBI_ADDR23 48
50
1 EBI_DATA0
3 EBI_DATA1
5 EBI_DATA2
7 EBI_DATA3
9 EBI_DATA4
11 EBI_DATA5
13 EBI_DATA6
15 EBI_DATA7
17 EBI_DATA8
19 EBI_DATA9
21 EBI_DATA10
23 EBI_DATA11
25 EBI_DATA12
27 EBI_DATA13
29 EBI_DATA14
31 EBI_DATA15
33 EBI_RDb
35 EBI_WEb1
37 EBI_CSb1
39 EBI_CSb2
41 BCM7038_RESET
43 M1_SCL 10
45 M1_SDA 10
47 GPIO41 11
49
D3.3V
EC42
330uF
16V
HEADER 25x2 pitch 2mm

9.20 DTV MB ASSY (9/16)

DTV MB ASSY (9/16)

• I2C,.UART,.CLK BLOCK

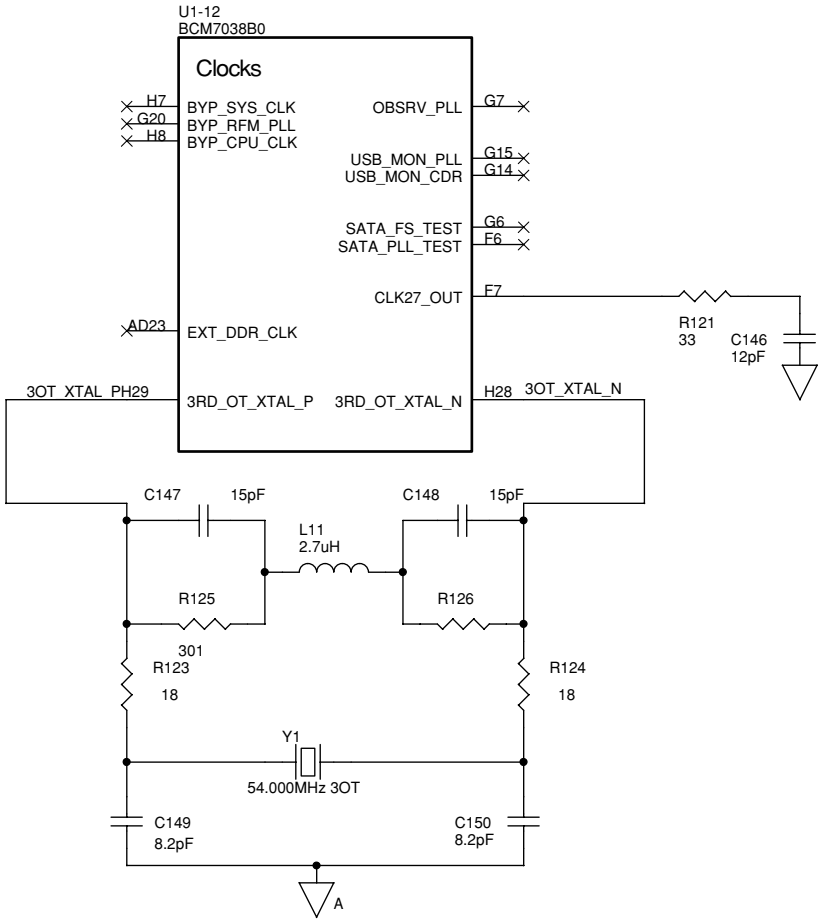

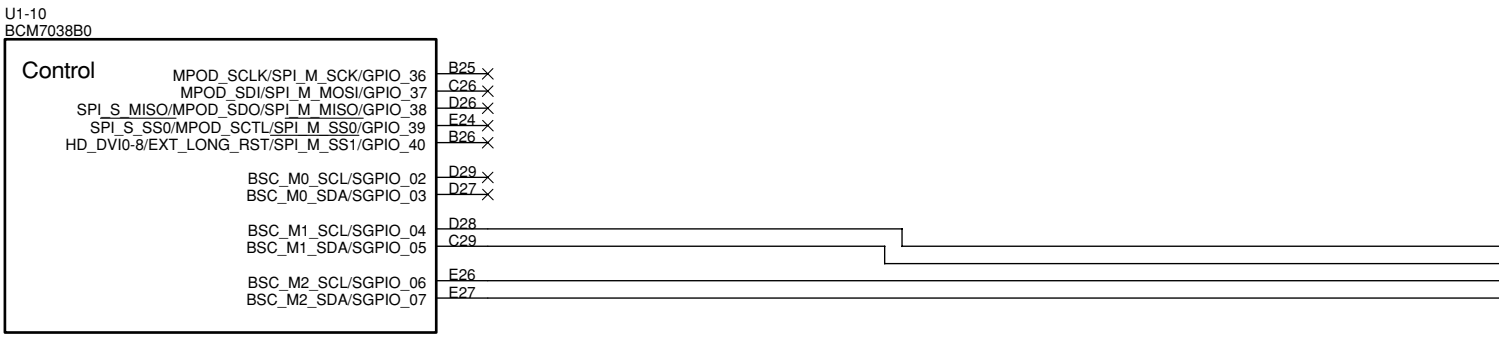

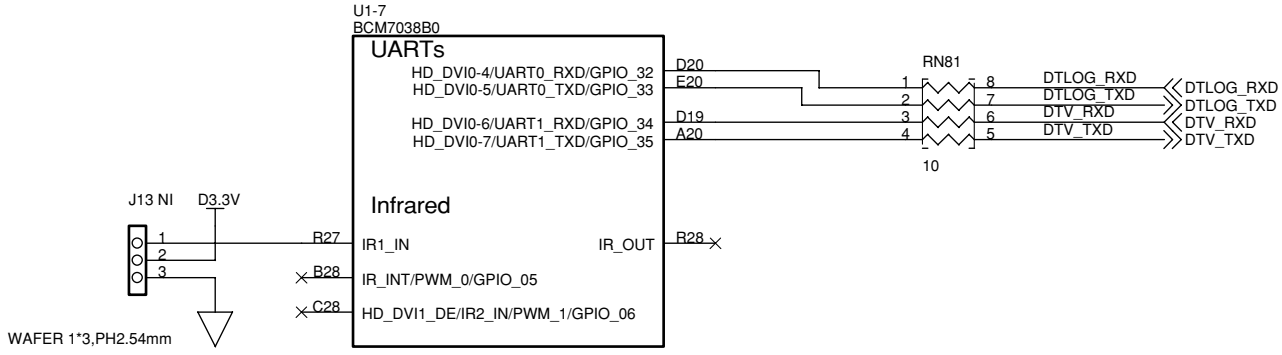
U1-7
BCM7038B0
UARTs
HD_DVI0-4/UART0_RXD/GPIO_32
HD_DVI0-5/UART0_TXD/GPIO_33
HD_DVI0-6/UART1_RXD/GPIO_34
HD_DVI0-7/UART1_TXD/GPIO_35
D20
E20
D19
A20
RN81
10
DTLOG_RXD
DTLOG_TXD
DTV_RXD
DTV_TXD
Infrared
IR1_IN
IR_OUT
IR_INT/PWM_0/GPIO_05
HD_DVI1_DE/IR2_IN/PWM_1/GPIO_06
R27
R28
B28
C28
J13 NI
D3.3V
WAFER 1*3,PH2.54mm

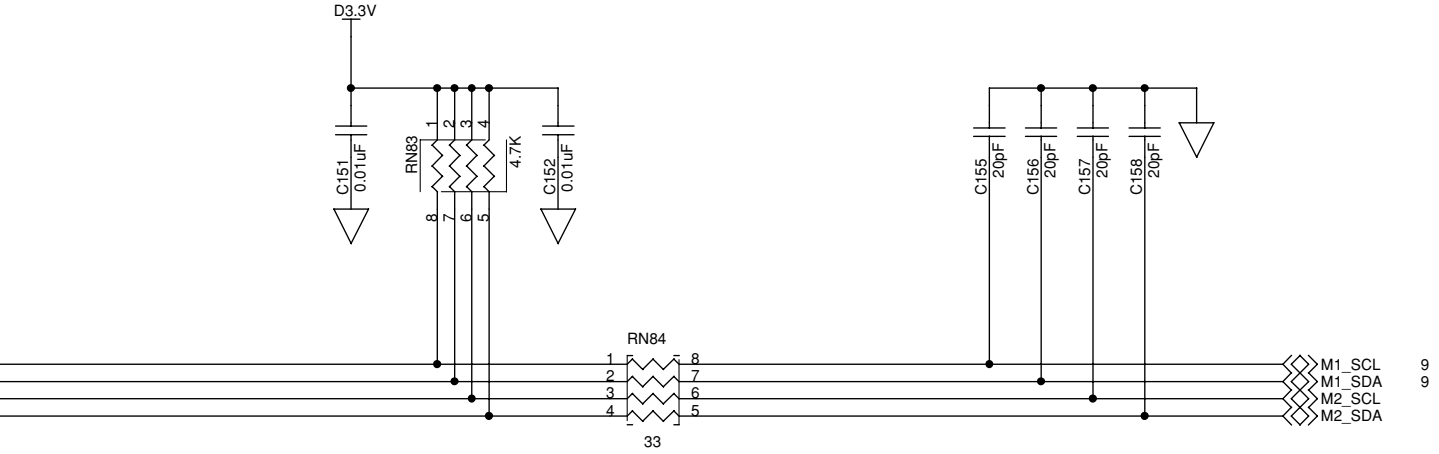
D3.3V
C151
0.01uF
RN83
4.7K
C152
0.01uF
C155
20pF
C156
20pF
C157
20pF
C158
20pF
RN84
33
M1_SCL
M1_SDA
M2_SCL
M2_SDA

9.21 DTV MB ASSY (10/16)

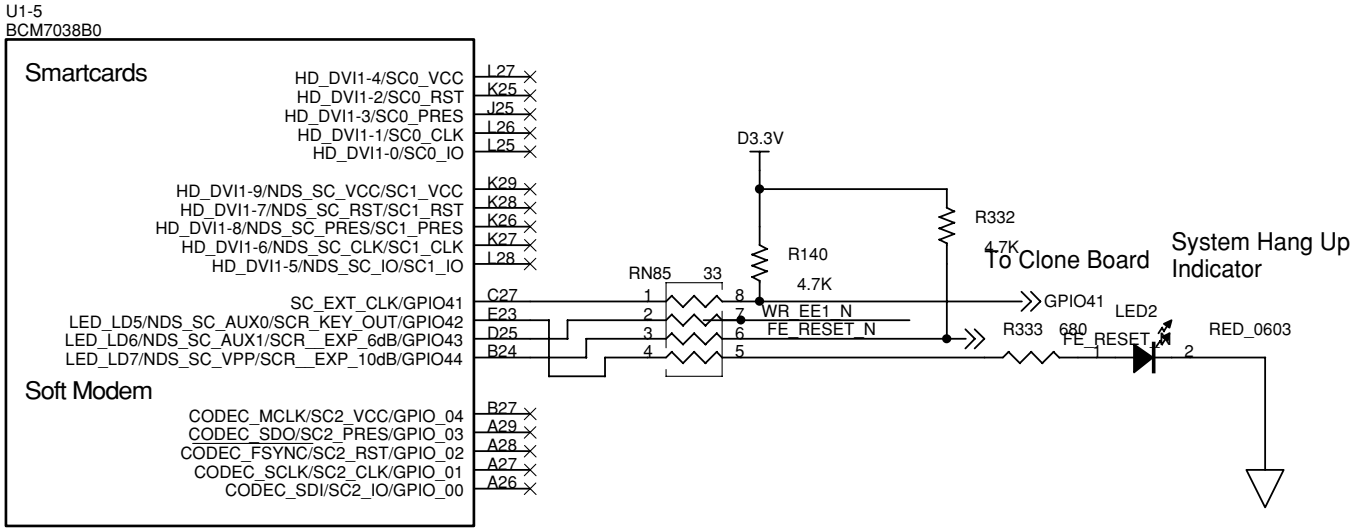

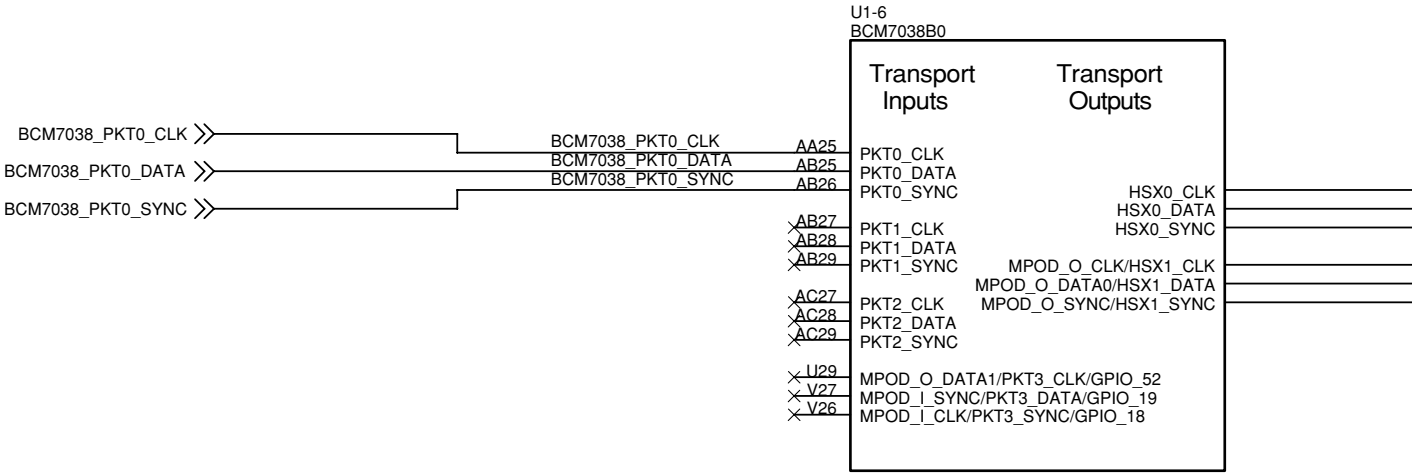

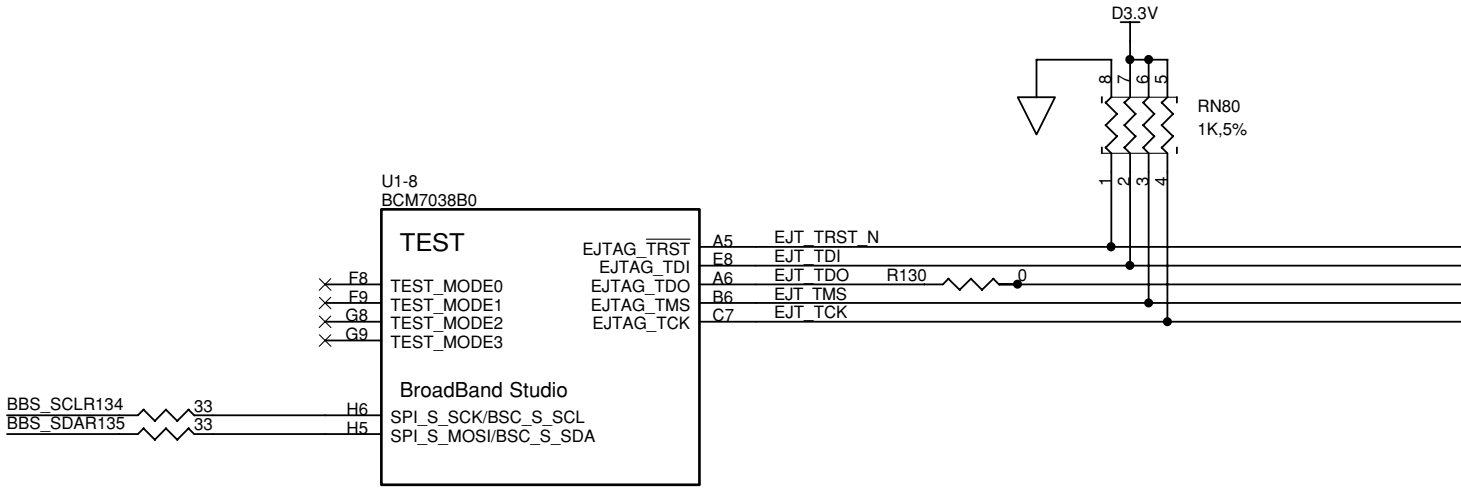

DTV MB ASSY (10/16)

• EJTAG,.TS,.EEPROMBLOCK

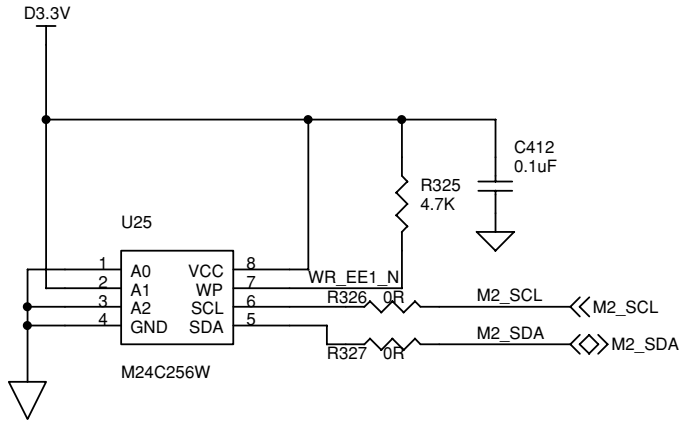

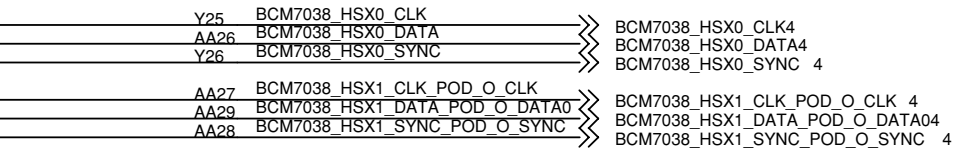

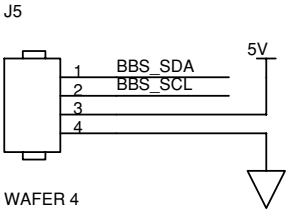

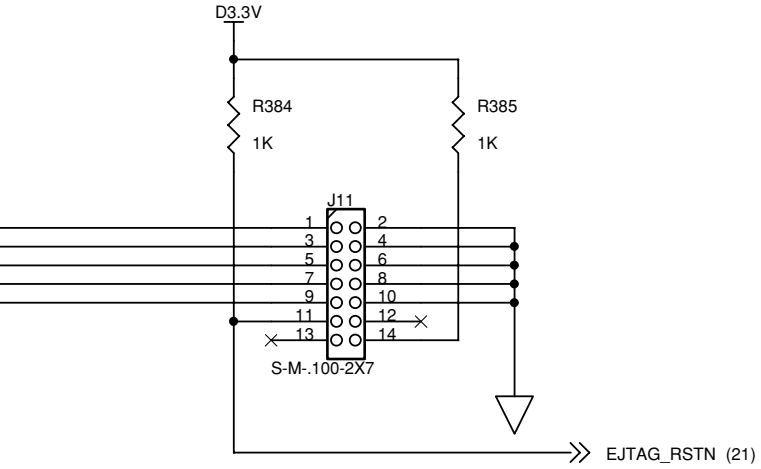

9.22 DTV MB ASSY (11/16)

DTV MB ASSY (11/16)

- USB;Ethernet;Sata BLOCK

Route TXP/M and RXP/M pairs differentially, matched short lengths, with 100 ohm differential impedance, adjacent to ground plane.

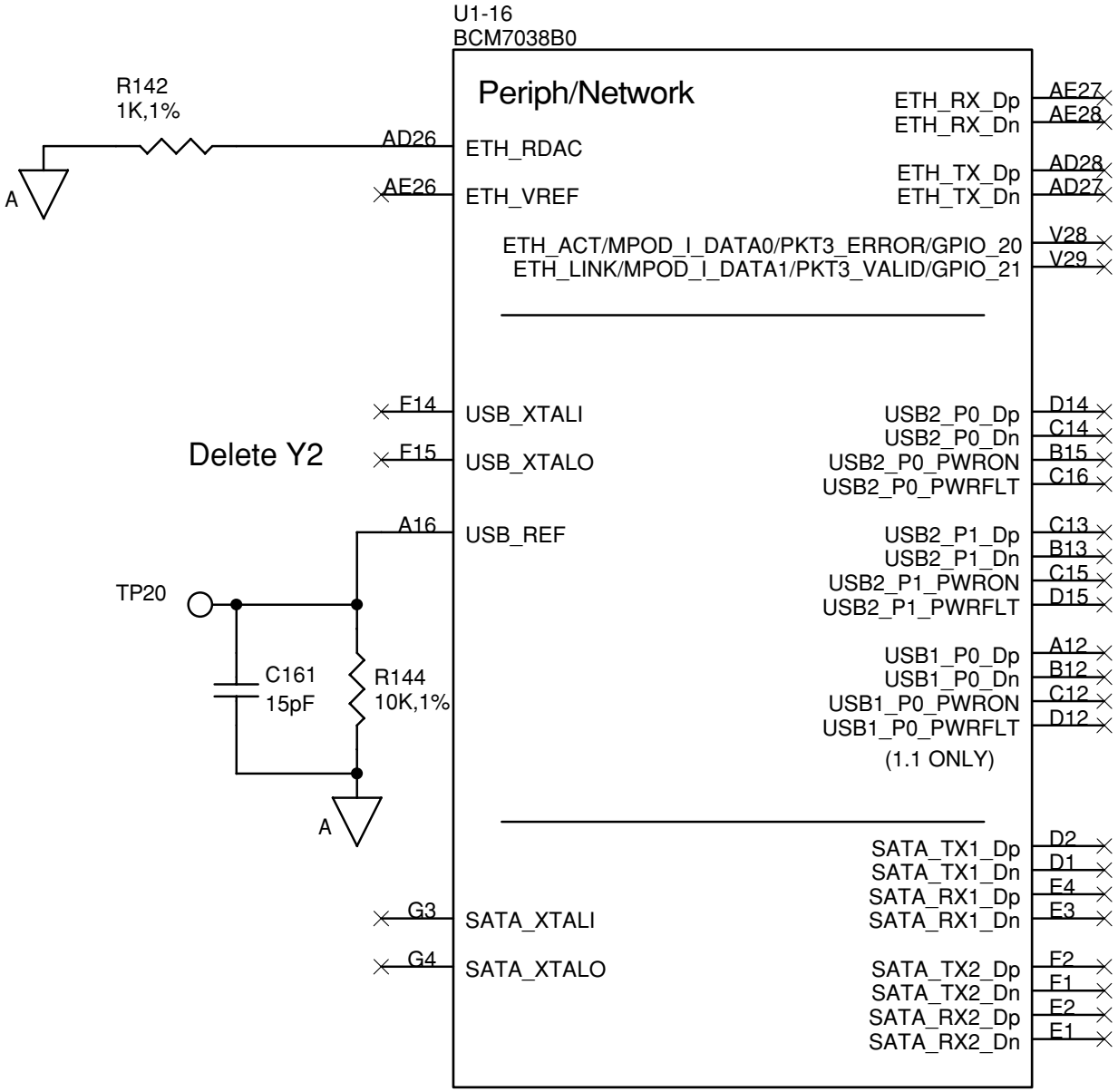

Stitch GND around
XTAL and caps inside
GND layer cutout

A

SATA & USB - Layout Guidelines & Notes

1. The Dp and Dn traces are length matched, with max differential skew, within 20mils
2. Differential trace length must be less than 5 inches
3. No more than 2 vias per trace, prefer zero.
4. Never split the ground plane under differential pair routing
5. Route differential pairs above the GND plane.
6. Differential impedance is 100 Ohms for SATA and 90 ohms for USB.
7. Adjacent differential pairs should be separated by at least 3 times the trace width. (e.g. 7.5 mil trace, leave >22.5mils between adjacent diff pairs)
8. Stich gnd vias around each differential pair, but NOT between a given pair.
9. SATA xtal +/- 50 ppm Tolerance +/- 100 ppm Stability

B

C

D

E

F

9.23 DTV MB ASSY (12/16)

DTV MB ASSY (12/16)

• POWER BLOCK

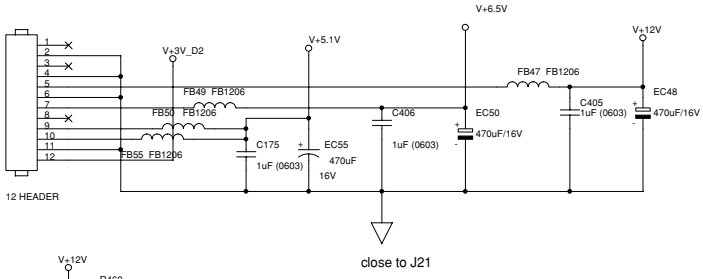

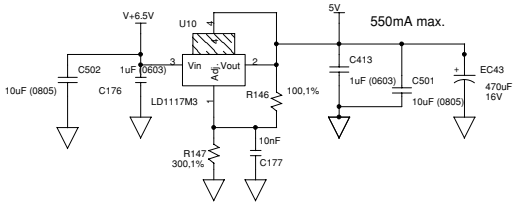

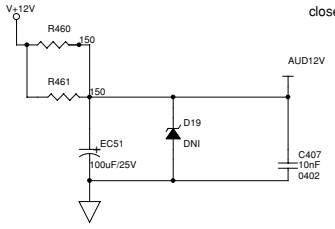

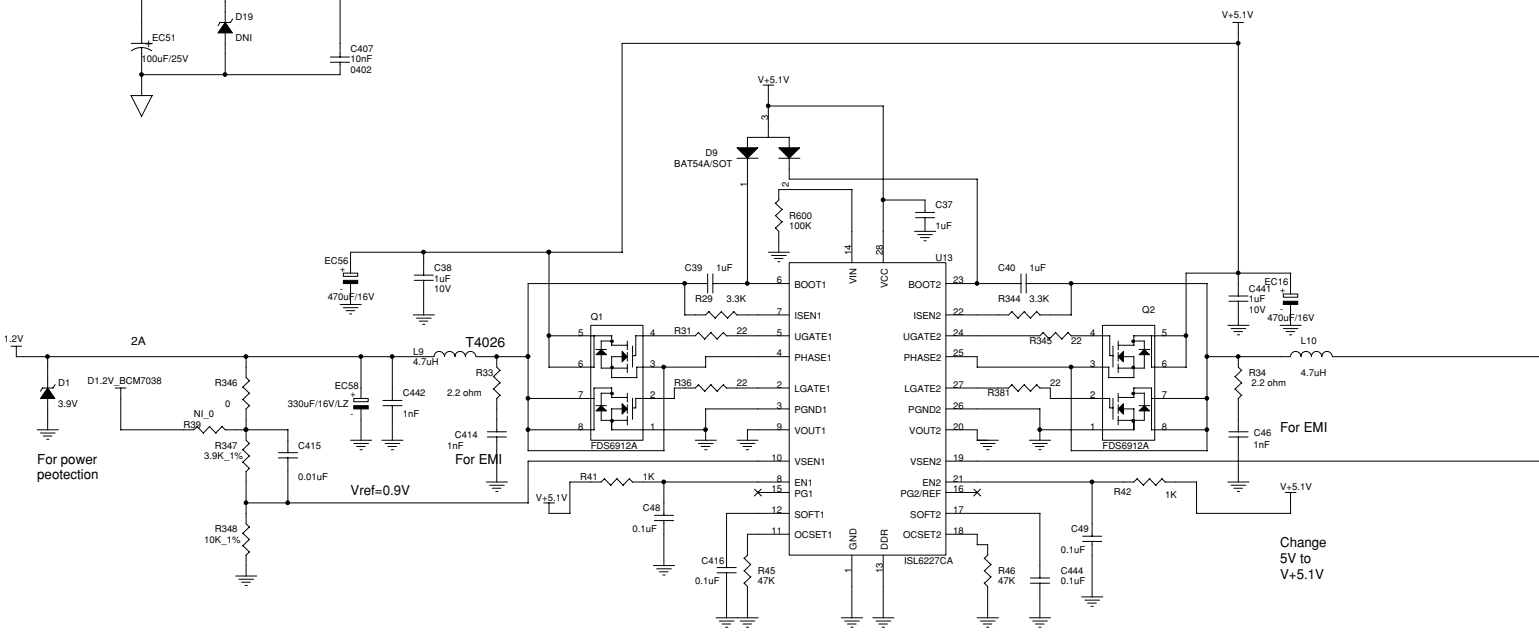

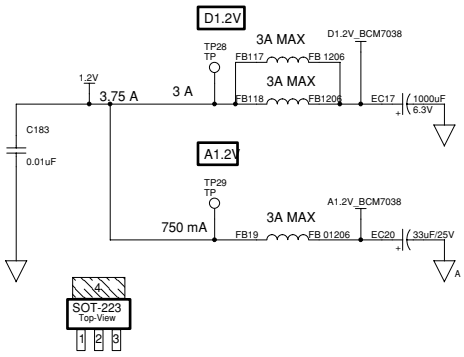

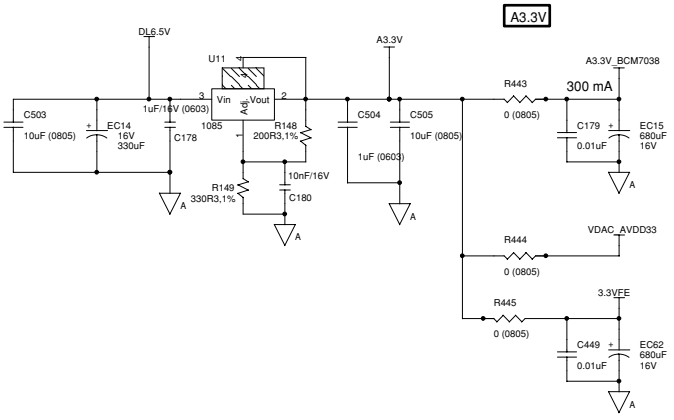

R448 0 (0805)

R449 0 (0805) DNI

R450 0 (0805)

R451 0 (0805) DNI

DDR Screw hole isolate to DGN add 4 Resistor to DGN.

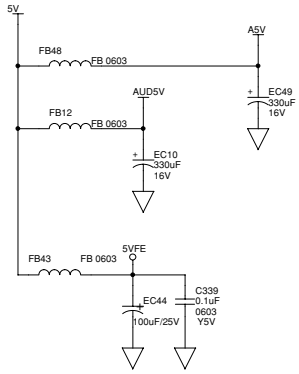
5V
FB48
FB 0603
A5V
EC49
330uF
16V
AUD5V
FB12
FB 0603
EC10
330uF
16V
FB43
FB 0603
5VFE
EC44
100uF/25V
C339
0.1uF
0603
Y5V

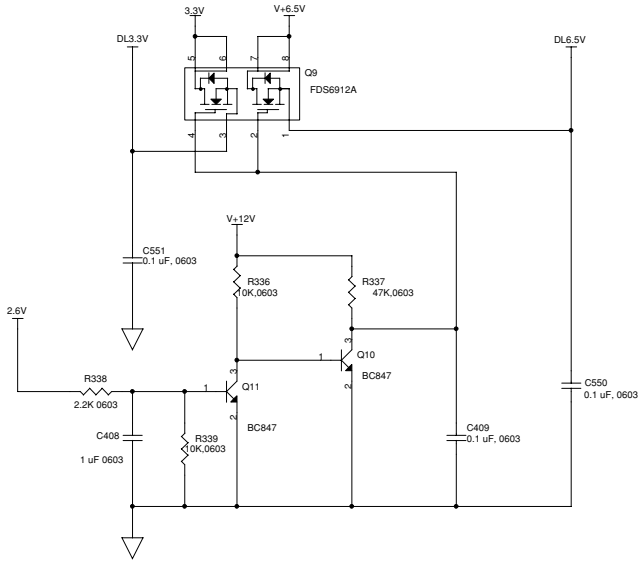
3.3V
V+6.5V
DL3.3V
DL6.5V
Q9
FDS6912A
V+12V
C551
0.1 uF, 0603
R336
0K,0603
R337
47K,0603
2.6V
Q10
BC847
R338
2.2K 0603
Q11
BC847
C550
0.1 uF, 0603
C408
1 uF 0603
R339
0K,0603
C409
0.1 uF, 0603

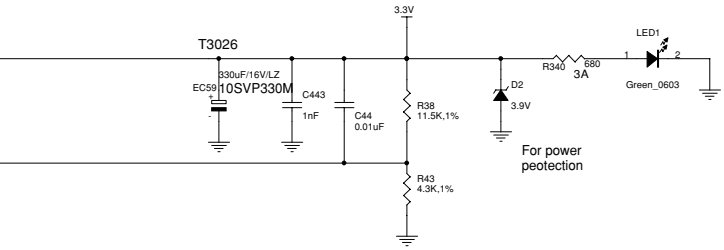
3.3V
T3026
330uF/16V/LZ
EC59
10SVP330M
C443
1nF
C44
0.01uF
R38
11.5K,1%
R43
4.3K,1%
D2
3.9V
For power
peotection
R340
680
3A
LED1
Green_0603

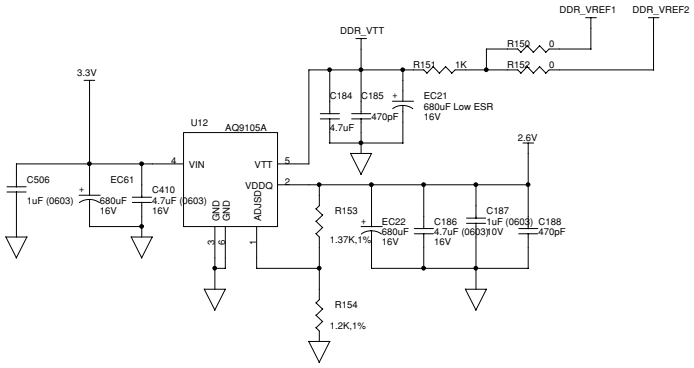
DDR_VTT
DDR_VREF1
DDR_VREF2
R150
0
R151
1K
R152
0
3.3V
U12
AQ9105A
VIN
VTT
VDDQ
GND
GND
ADJSD
C184
4.7uF
C185
470pF
EC21
680uF Low ESR
16V
2.6V
C506
1uF (0603)
EC61
680uF
16V
C410
4.7uF (0603)
16V
R153
1.37K,1%
EC22
680uF
16V
C186
4.7uF (0603)
16V
C187
1uF (0603)
10V
C188
470pF
R154
1.2K,1%

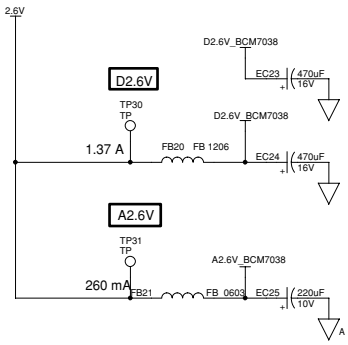
2.6V
D2.6V_BCM7038
D2.6V
EC23
470uF
16V
TP30
TP
D2.6V_BCM7038
1.37 A
FB20
FB 1206
EC24
470uF
16V
A2.6V
TP31
TP
A2.6V_BCM7038
260 mA
FB21
FB 0603
EC25
220uF
10V

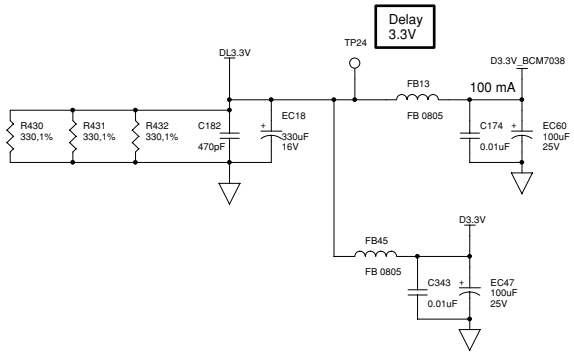
Delay
3.3V
TP24
DL3.3V
D3.3V_BCM7038
FB13
FB 0805
100 mA
R430
330,1%
R431
330,1%
R432
330,1%
C182
470pF
EC18
330uF
16V
C174
0.01uF
EC60
100uF
25V
D3.3V
FB45
FB 0805
C343
0.01uF
EC47
100uF
25V

9.24 DTV MB ASSY (13/16)

DTV MB ASSY (13/16)

• Analog Decoupling BLOCK

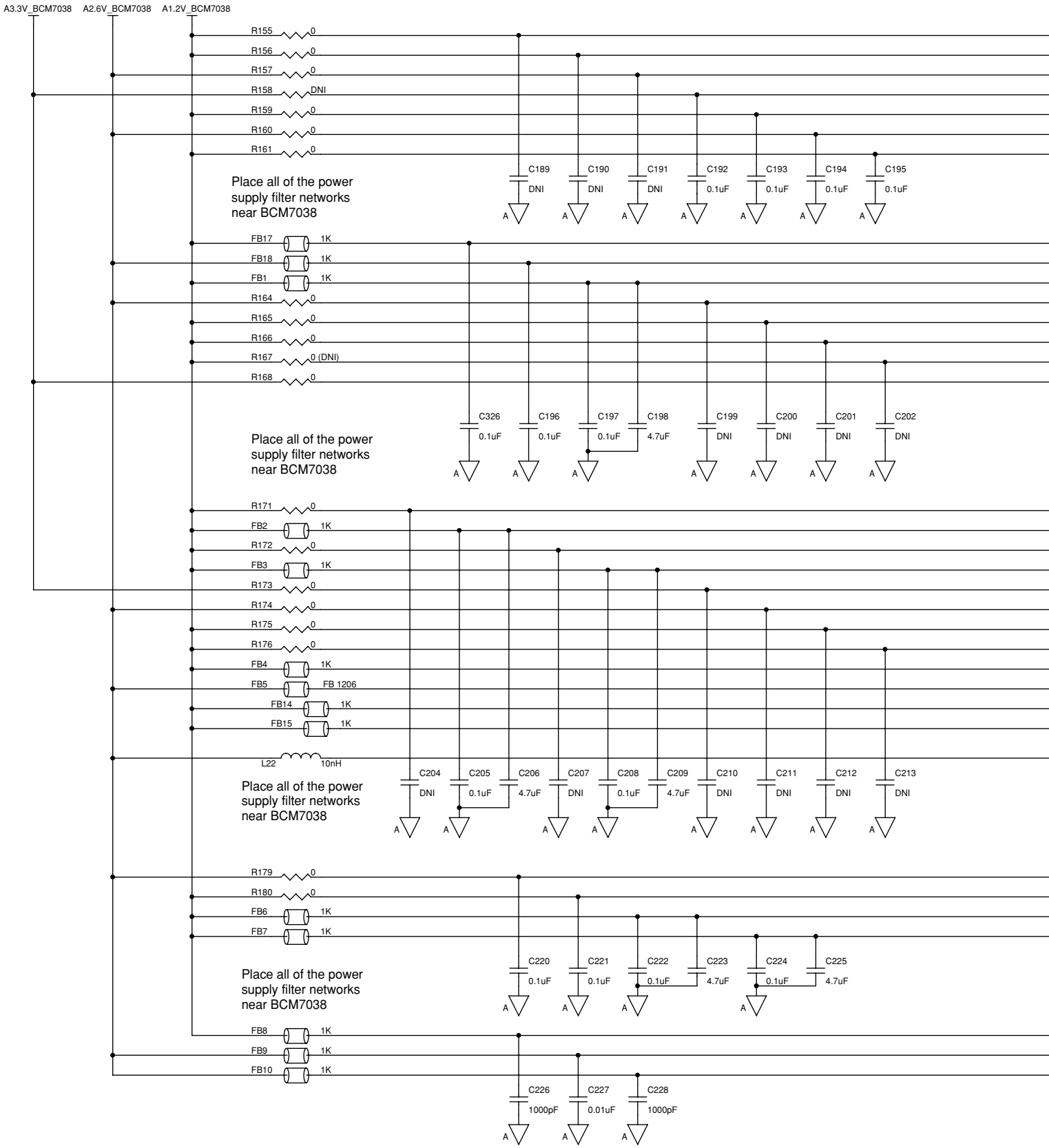

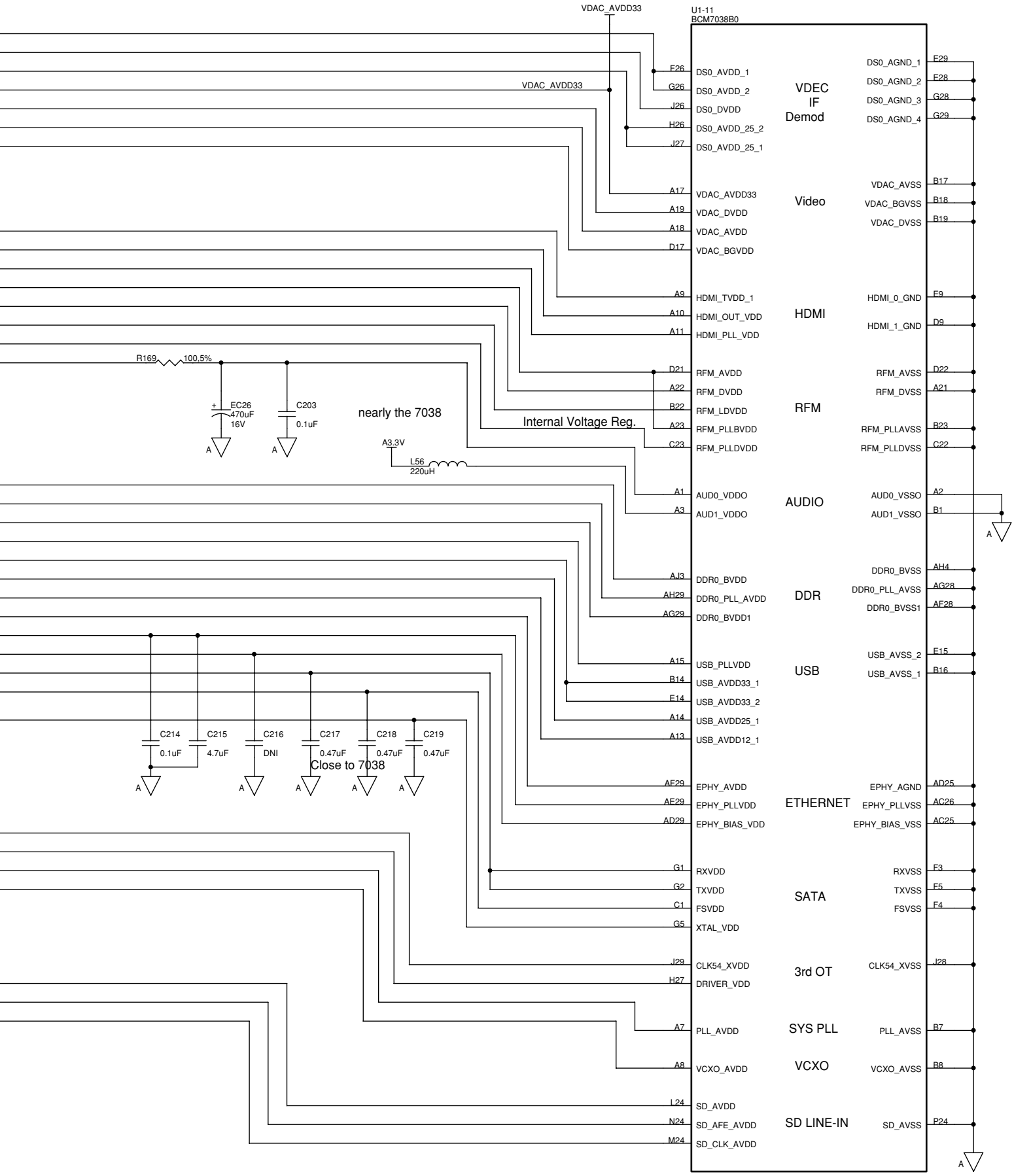
U1-11
BCM7038B0
VDAC_AVDD33
VDEC
IF
Demod
Video
HDMI
RFM
AUDIO
DDR
USB
ETHERNET
SATA
3rd OT
SYS PLL
VCXO
SD LINE-IN
F26 DS0_AVDD_1
G26 DS0_AVDD_2
J26 DS0_DVDD
H26 DS0_AVDD_25_2
J27 DS0_AVDD_25_1
A17 VDAC_AVDD33
A19 VDAC_DVDD
A18 VDAC_AVDD
D17 VDAC_BGVDD
A9 HDMI_TVDD_1
A10 HDMI_OUT_VDD
A11 HDMI_PLL_VDD
D21 RFM_AVDD
A22 RFM_DVDD
B22 RFM_LDVDD
A23 RFM_PLLBVDD
C23 RFM_PLLDVDD
A1 AUD0_VDDO
A3 AUD1_VDDO
AJ3 DDR0_BVDD
AH29 DDR0_PLL_AVDD
AG29 DDR0_BVDD1
A15 USB_PLLVDD
B14 USB_AVDD33_1
E14 USB_AVDD33_2
A14 USB_AVDD25_1
A13 USB_AVDD12_1
AF29 EPHY_AVDD
AE29 EPHY_PLLVDD
AD29 EPHY_BIAS_VDD
G1 RXVDD
G2 TXVDD
C1 FSVDD
G5 XTAL_VDD
J29 CLK54_XVDD
H27 DRIVER_VDD
A7 PLL_AVDD
A8 VCXO_AVDD
L24 SD_AVDD
N24 SD_AFE_AVDD
M24 SD_CLK_AVDD
DS0_AGND_1 E29
DS0_AGND_2 E28
DS0_AGND_3 G28
DS0_AGND_4 G29
VDAC_AVSS B17
VDAC_BGVSS B18
VDAC_DVSS B19
HDMI_0_GND E9
HDMI_1_GND D9
RFM_AVSS D22
RFM_DVSS A21
RFM_PLLAVSS B23
RFM_PLLDVSS C22
AUD0_VSSO A2
AUD1_VSSO B1
DDR0_BVSS AH4
DDR0_PLL_AVSS AG28
DDR0_BVSS1 AF28
USB_AVSS_2 E15
USB_AVSS_1 B16
EPHY_AGND AD25
EPHY_PLLVSS AC26
EPHY_BIAS_VSS AC25
RXVSS F3
TXVSS F5
FSVSS F4
CLK54_XVSS J28
PLL_AVSS B7
VCXO_AVSS B8
SD_AVSS P24
R169 100,5%
EC26 470uF 16V
C203 0.1uF
nearly the 7038
Internal Voltage Reg.
A3.3V
L56 220uH
C214 0.1uF
C215 4.7uF
C216 DNI
C217 0.47uF
C218 0.47uF
C219 0.47uF
Close to 7038

9.25 DTV MB ASSY (14/16)

DTV MB ASSY (14/16)

• Digital DecouplingBLOCK

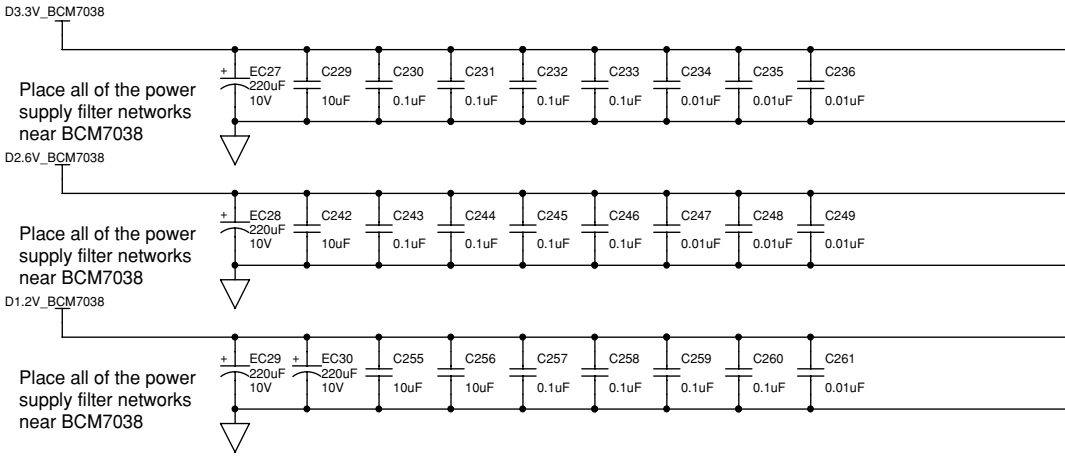

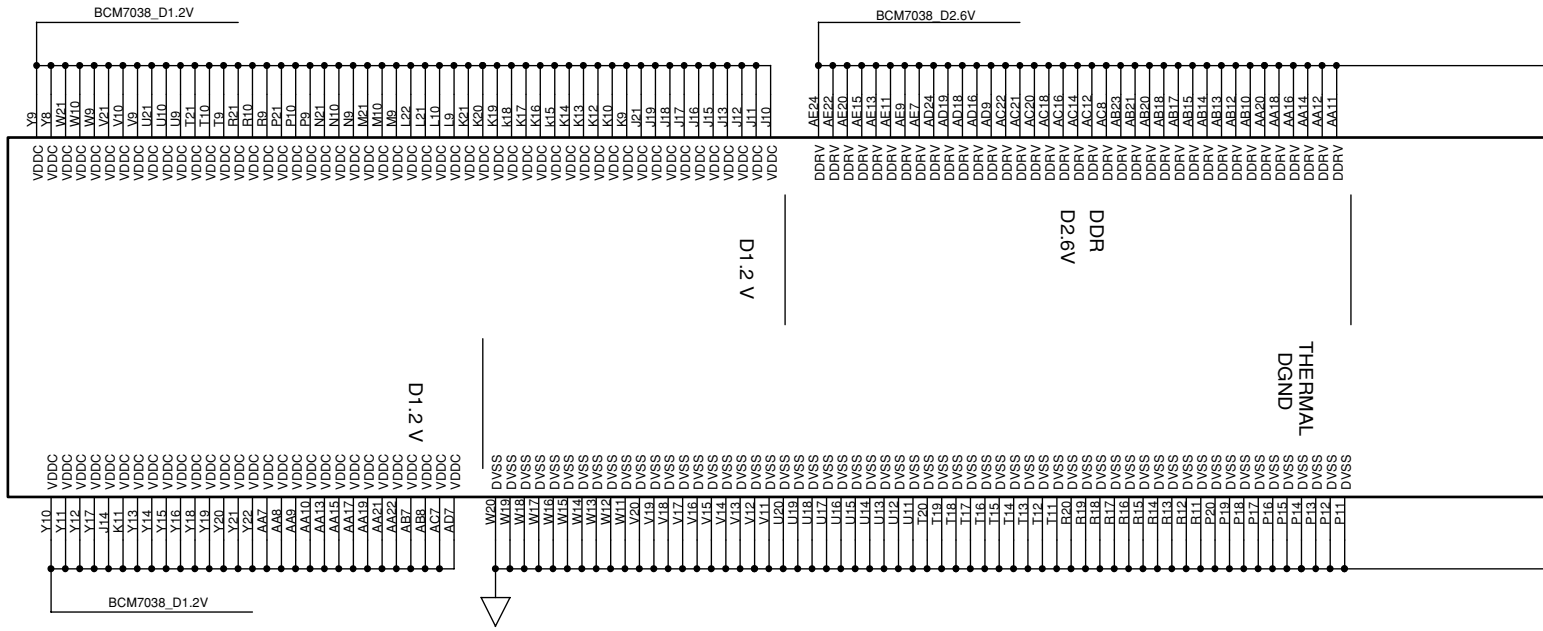

• Video Buffers BLOCK

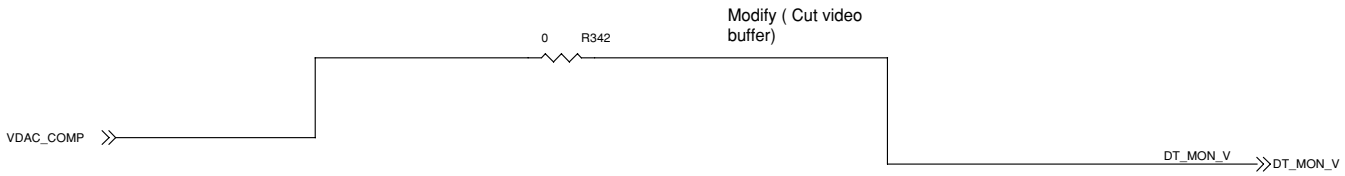

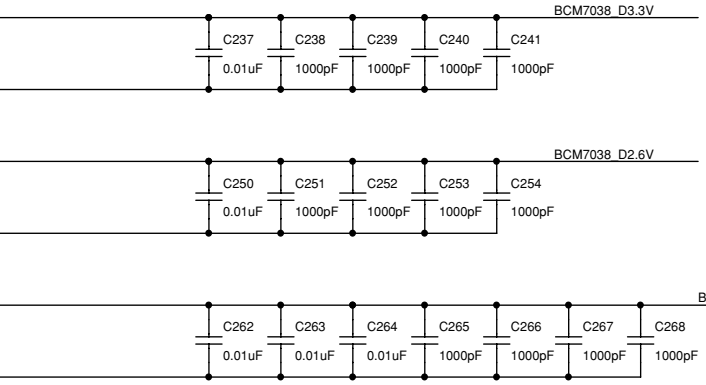
BCM7038_D3.3V
C237
0.01uF
C238
1000pF
C239
1000pF
C240
1000pF
C241
1000pF
BCM7038_D2.6V
C250
0.01uF
C251
1000pF
C252
1000pF
C253
1000pF
C254
1000pF
BCM7038_D1.2V
C262
0.01uF
C263
0.01uF
C264
0.01uF
C265
1000pF
C266
1000pF
C267
1000pF
C268
1000pF

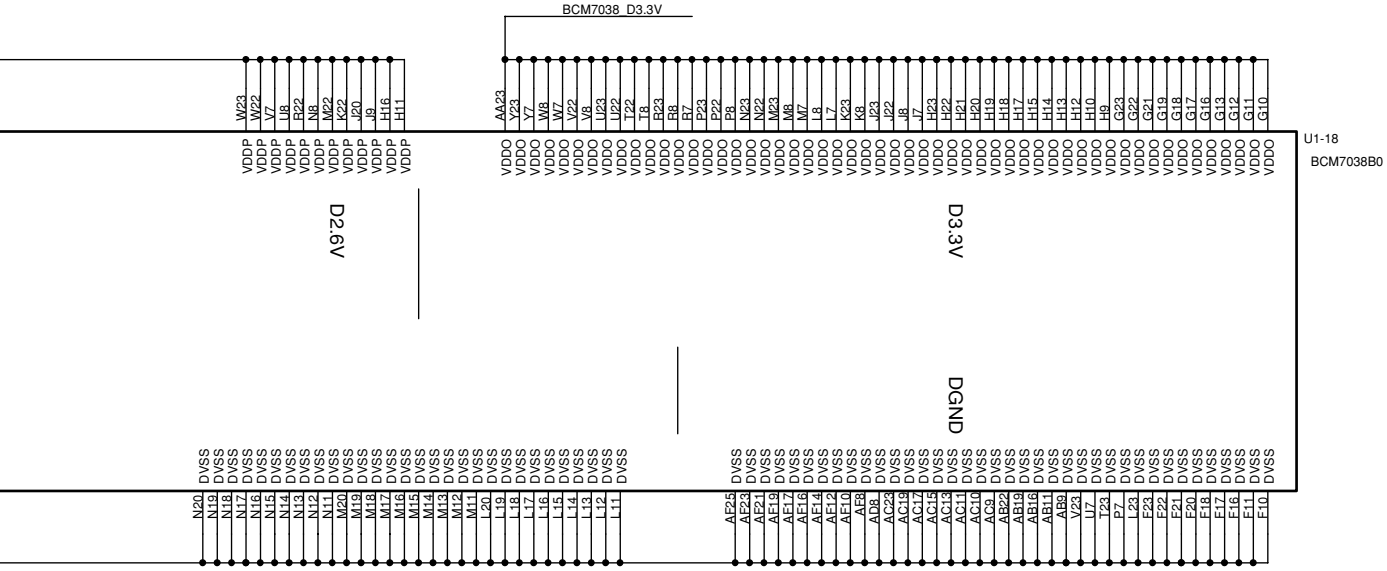
BCM7038_D3.3V
W23 W22 V7 U8 R22 N8 M22 K22 J20 J9 H16 H11
VDDP
AA23 Y23 Y7 W8 W7 V22 V8 U23 U22 T22 T8 R23 R8 P7 P23 P22 P8 N23 N22 M23 M8 M7 L8 L7 K23 K8 J23 J22 J8 J7 H23 H22 H21 H20 H19 H18 H17 H15 H14 H13 H12 H10 H9 G23 G22 G21 G19 G18 G17 G16 G13 G12 G11 G10
VDDO
U1-18
BCM7038B0
D2.6V
D3.3V
DGND
DVSS
N20 N19 N18 N17 N16 N15 N14 N13 N12 N11 M20 M19 M18 M17 M16 M15 M14 M13 M12 M11 L20 L19 L18 L17 L16 L15 L14 L13 L12 L11
AF25 AF23 AF21 AF19 AF17 AE16 AE14 AE12 AE10 AE8 AD8 AC23 AC19 AC17 AC15 AC13 AC11 AC10 AC9 AB22 AB19 AB16 AB11 AB9 V23 U7 T23 P7 L23 F23 F22 F21 F20 F18 F17 F16 F11 F10

9.26 DTV MB ASSY (15/16)

DTV MB ASSY (15/16)

- Front End BLOCK

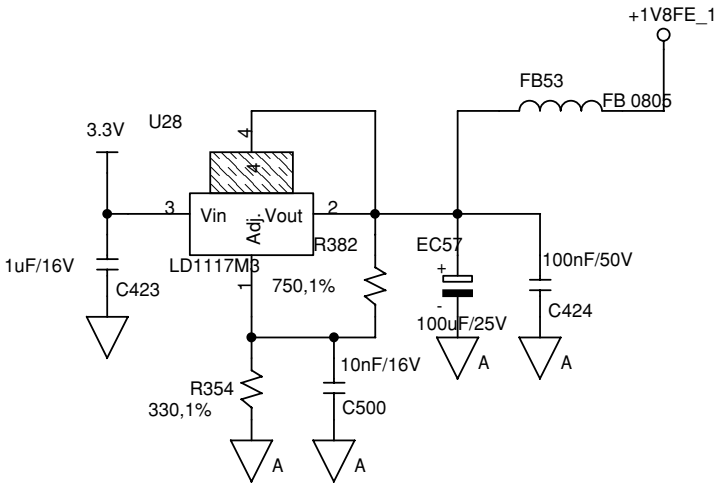

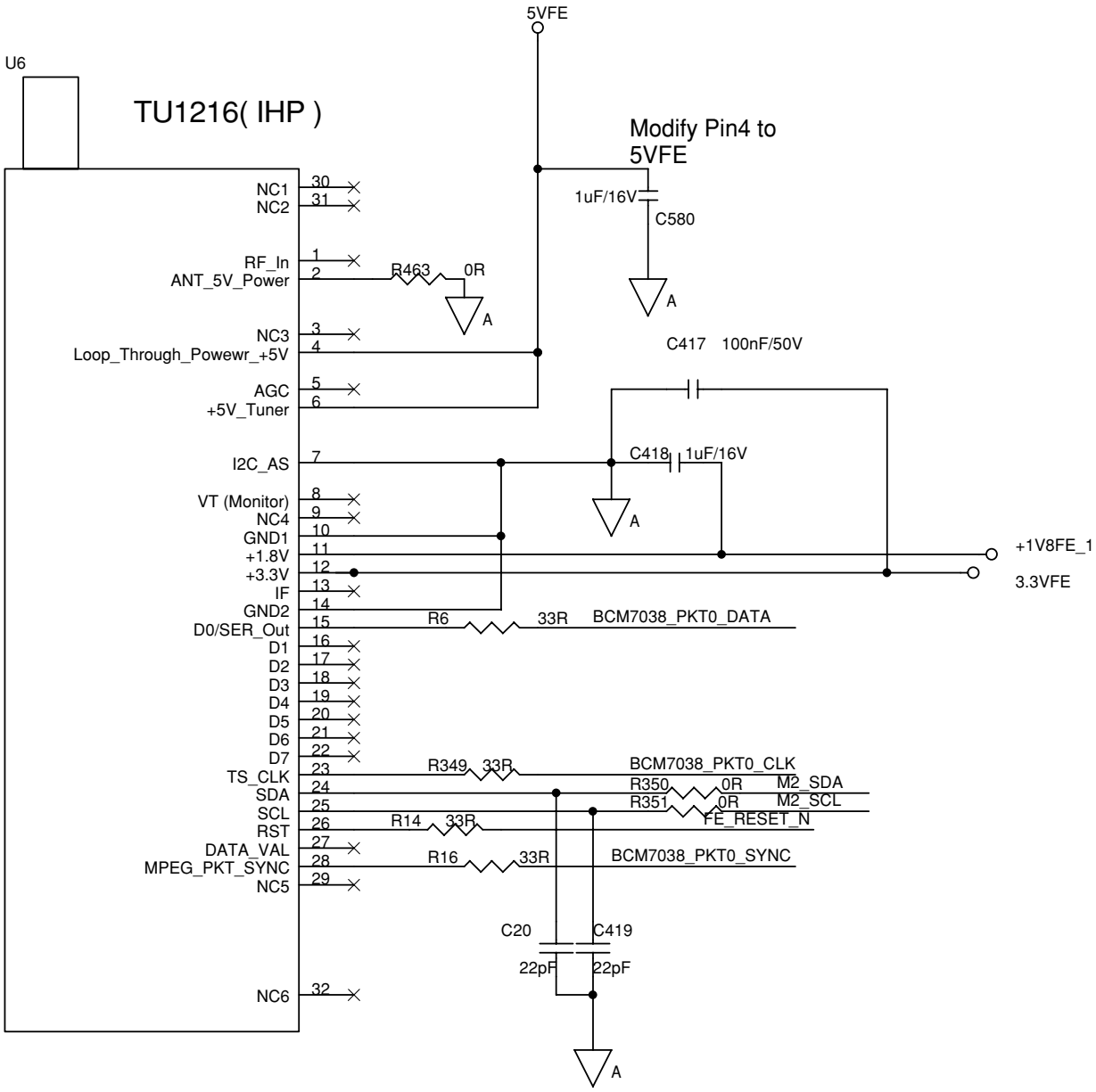
5VFE
U6
TU1216(IHP)
Modify Pin4 to
5VFE
1uF/16V
C580
NC1
NC2
RF_In
ANT_5V_Power
R463
0R
NC3
Loop_Through_Powewr_+5V
C417 100nF/50V
AGC
+5V_Tuner
I2C_AS
C418
1uF/16V
VT (Monitor)
NC4
GND1
+1.8V
+3.3V
IF
GND2
D0/SER_Out
D1
D2
D3
D4
D5
D6
D7
TS_CLK
SDA
SCL
RST
DATA_VAL
MPEG_PKT_SYNC
NC5
NC6
+1V8FE_1
3.3VFE
R6
33R
BCM7038_PKT0_DATA
R349
33R
BCM7038_PKT0_CLK
R350
0R
M2_SDA
R351
0R
M2_SCL
FE_RESET_N
R14
33R
R16
33R
BCM7038_PKT0_SYNC
C20
C419
22pF
22pF
A

9.27 DTV MB ASSY (16/16)

DTV MB ASSY (16/16)

- Inter-Connection BLOCK

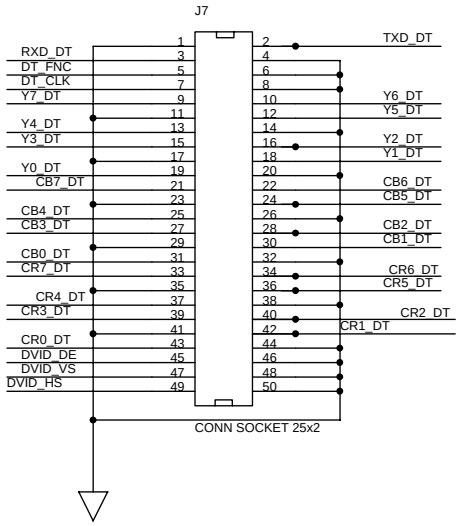

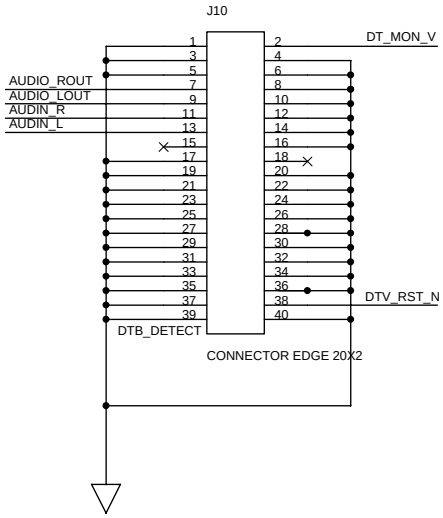

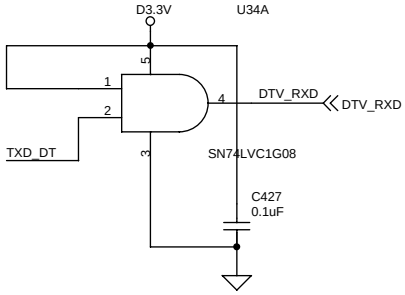

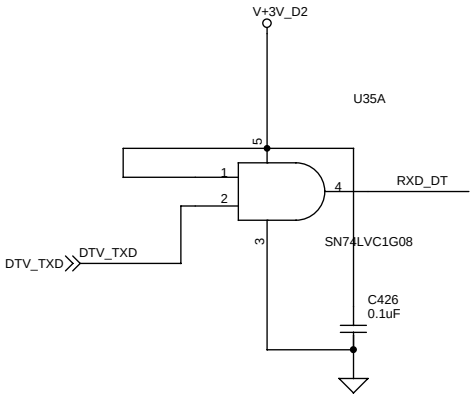

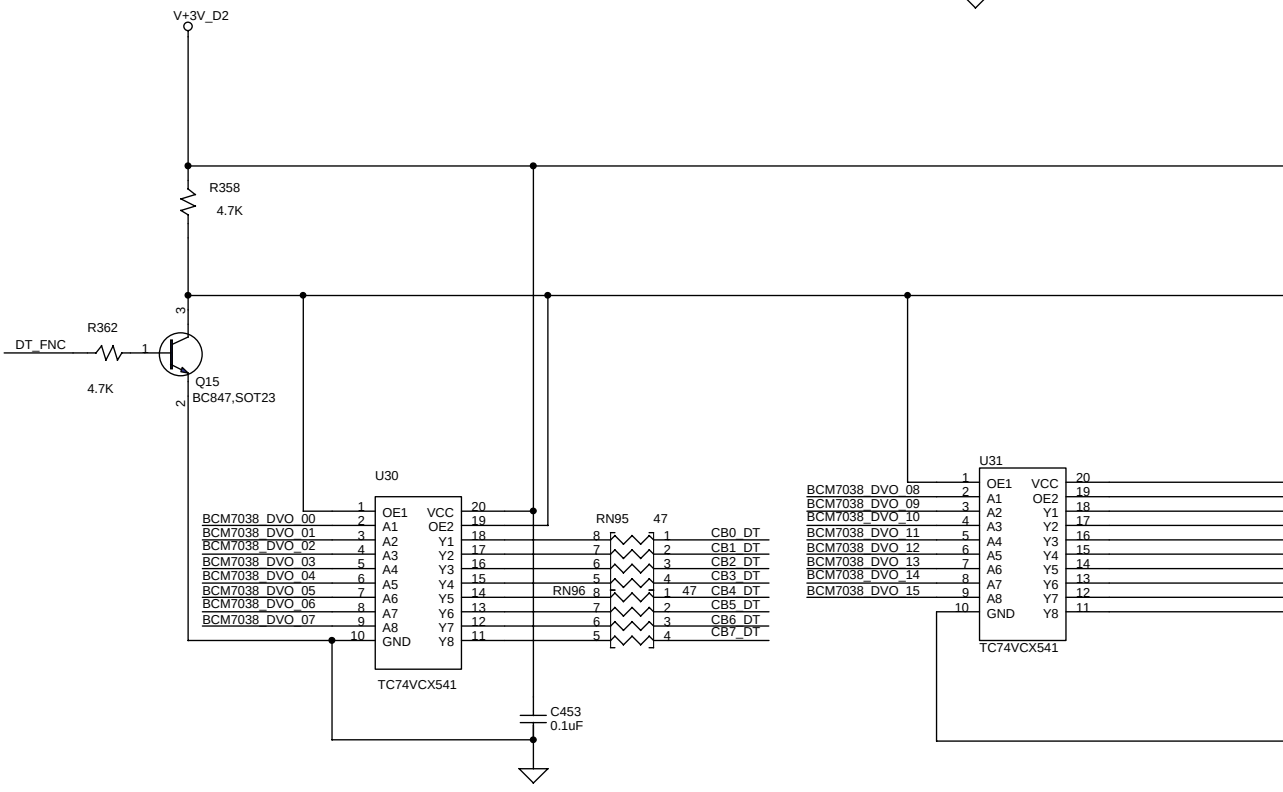

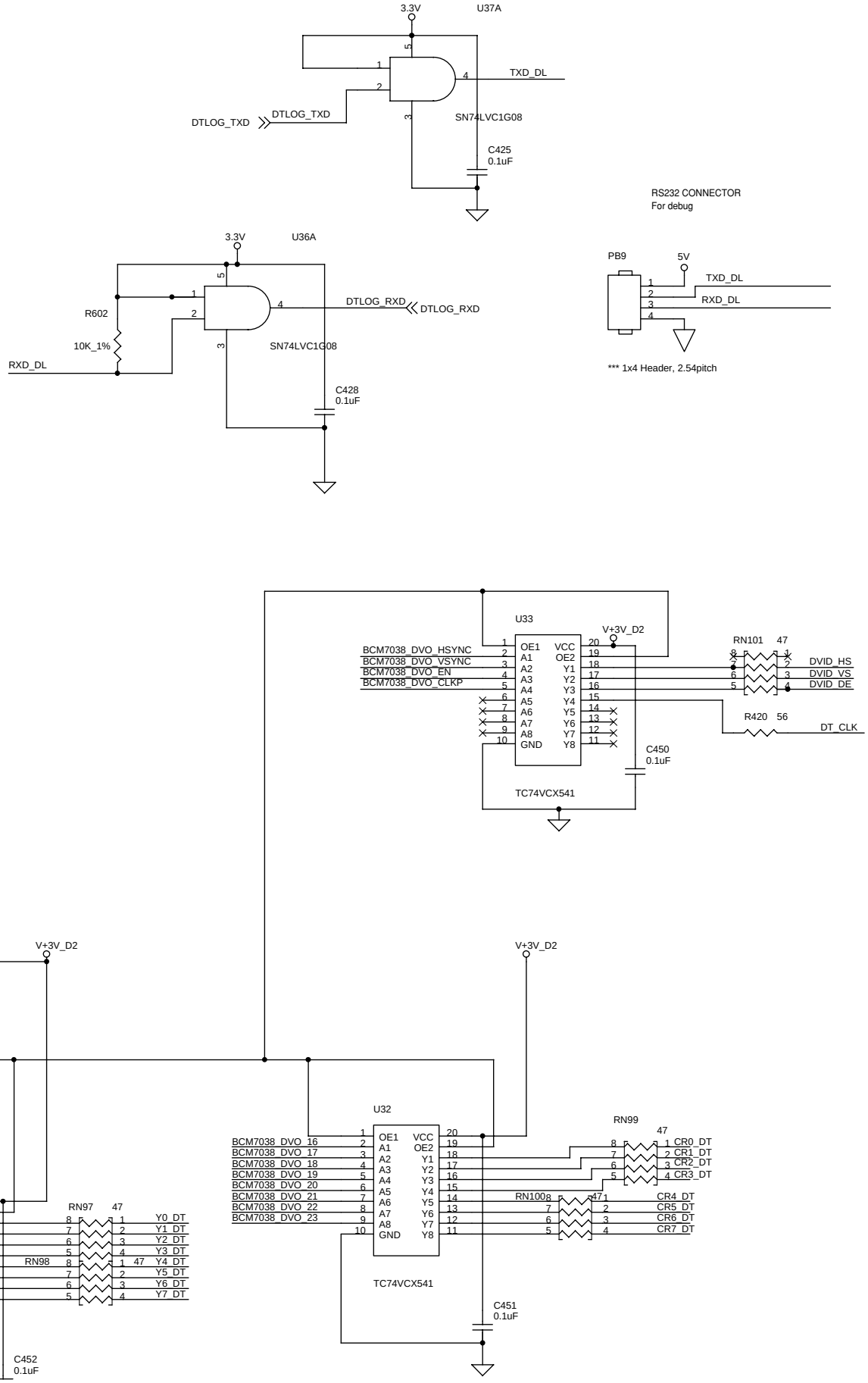
3.3V
U37A
TXD_DL
DTLOG_TXD
DTLOG_TXD
SN74LVC1G08
C425
0.1uF
RS232 CONNECTOR
For debug
3.3V
U36A
PB9
5V
TXD_DL
RXD_DL
R602
10K_1%
DTLOG_RXD
DTLOG_RXD
SN74LVC1G08
RXD_DL
*** 1x4 Header, 2.54pitch
C428
0.1uF
U33
V+3V_D2
BCM7038_DVO_HSYNC
BCM7038_DVO_VSYNC
BCM7038_DVO_EN
BCM7038_DVO_CLKP
OE1
OE2
GND
VCC
RN101
47
DVID_HS
DVID_VS
DVID_DE
R420
56
DT_CLK
C450
0.1uF
TC74VCX541
V+3V_D2
V+3V_D2
U32
BCM7038_DVO_16
BCM7038_DVO_17
BCM7038_DVO_18
BCM7038_DVO_19
BCM7038_DVO_20
BCM7038_DVO_21
BCM7038_DVO_22
BCM7038_DVO_23
RN99
47
CR0_DT
CR1_DT
CR2_DT
CR3_DT
RN100
CR4_DT
CR5_DT
CR6_DT
CR7_DT
RN97
47
Y0_DT
Y1_DT
Y2_DT
Y3_DT
RN98
Y4_DT
Y5_DT
Y6_DT
Y7_DT
TC74VCX541
C451
0.1uF
C452
0.1uF

10. PCB CONNECTION DIAGRAM

10.1 DTV MB ASSY

SIDE A

DTV MB ASSY

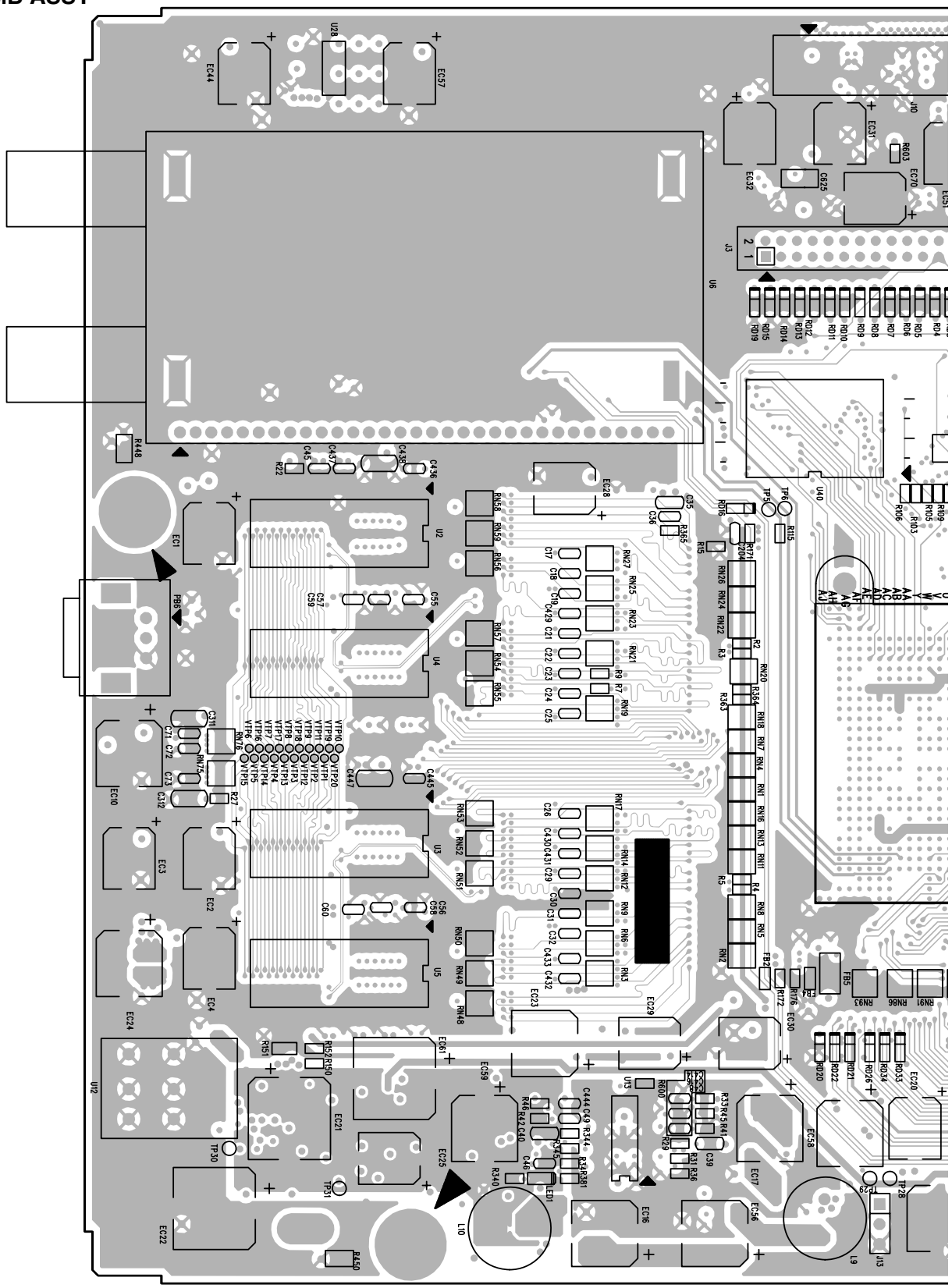

SIDE A

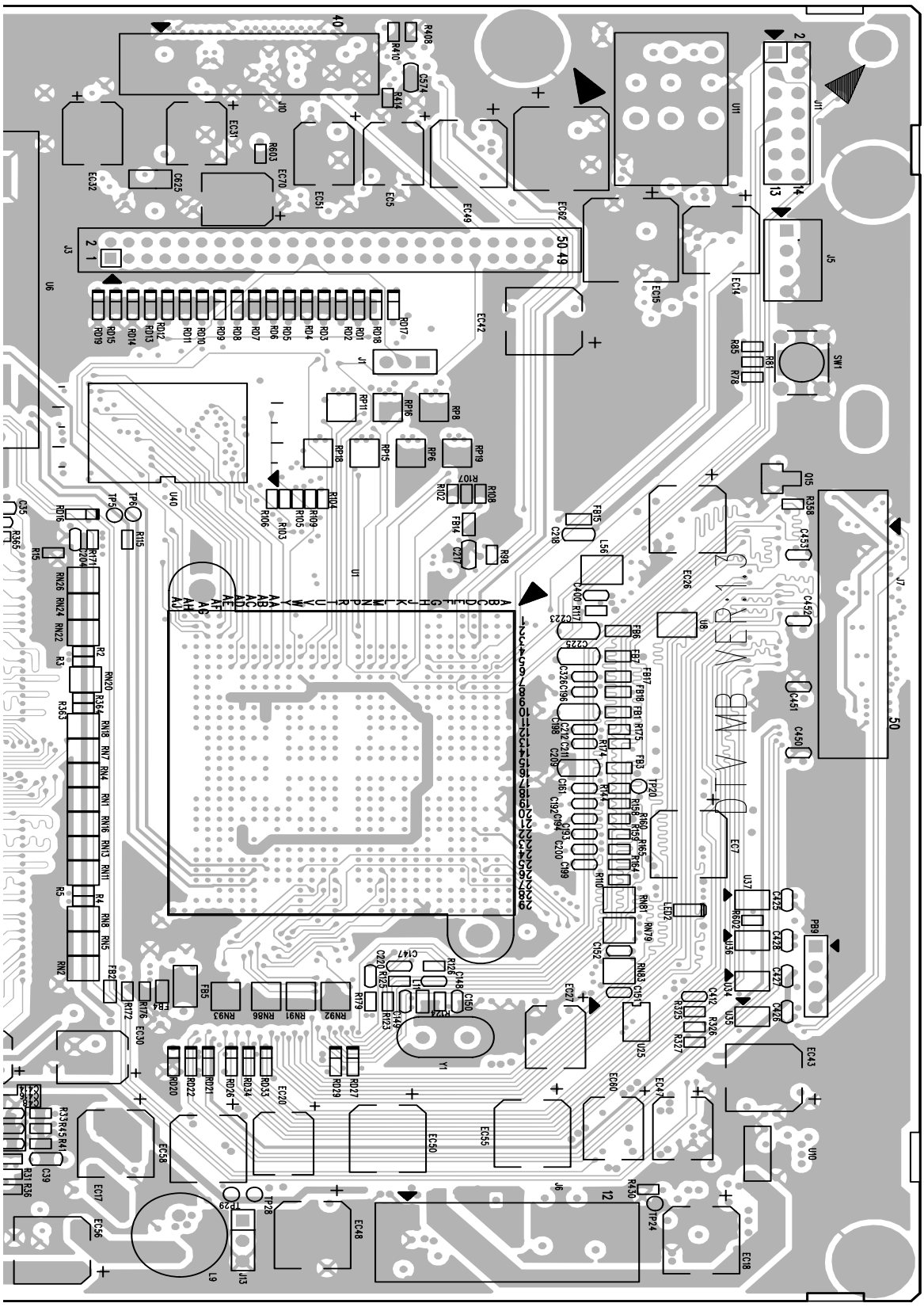

SIDE B

DTV MB ASSY

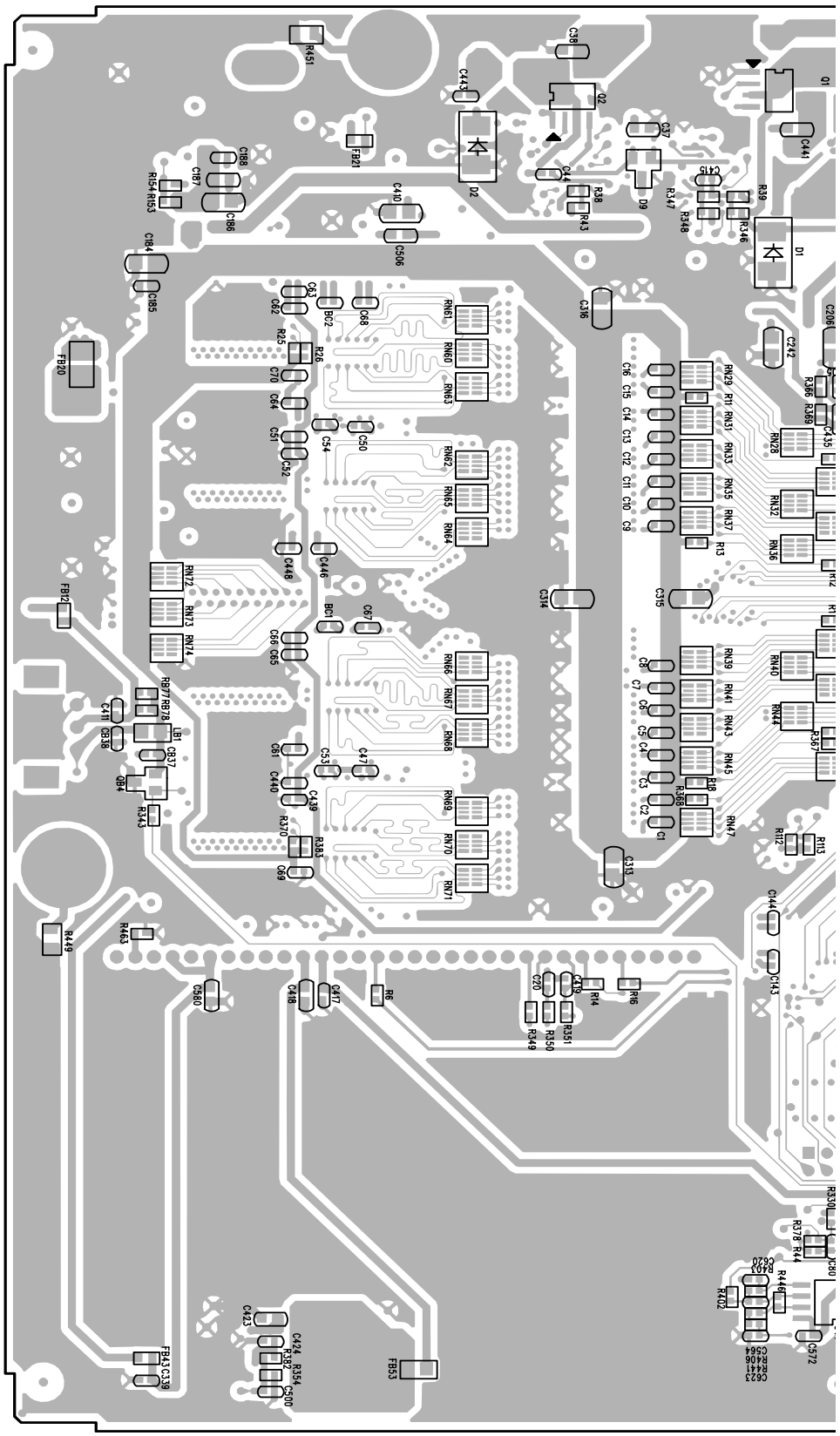

SIDE B

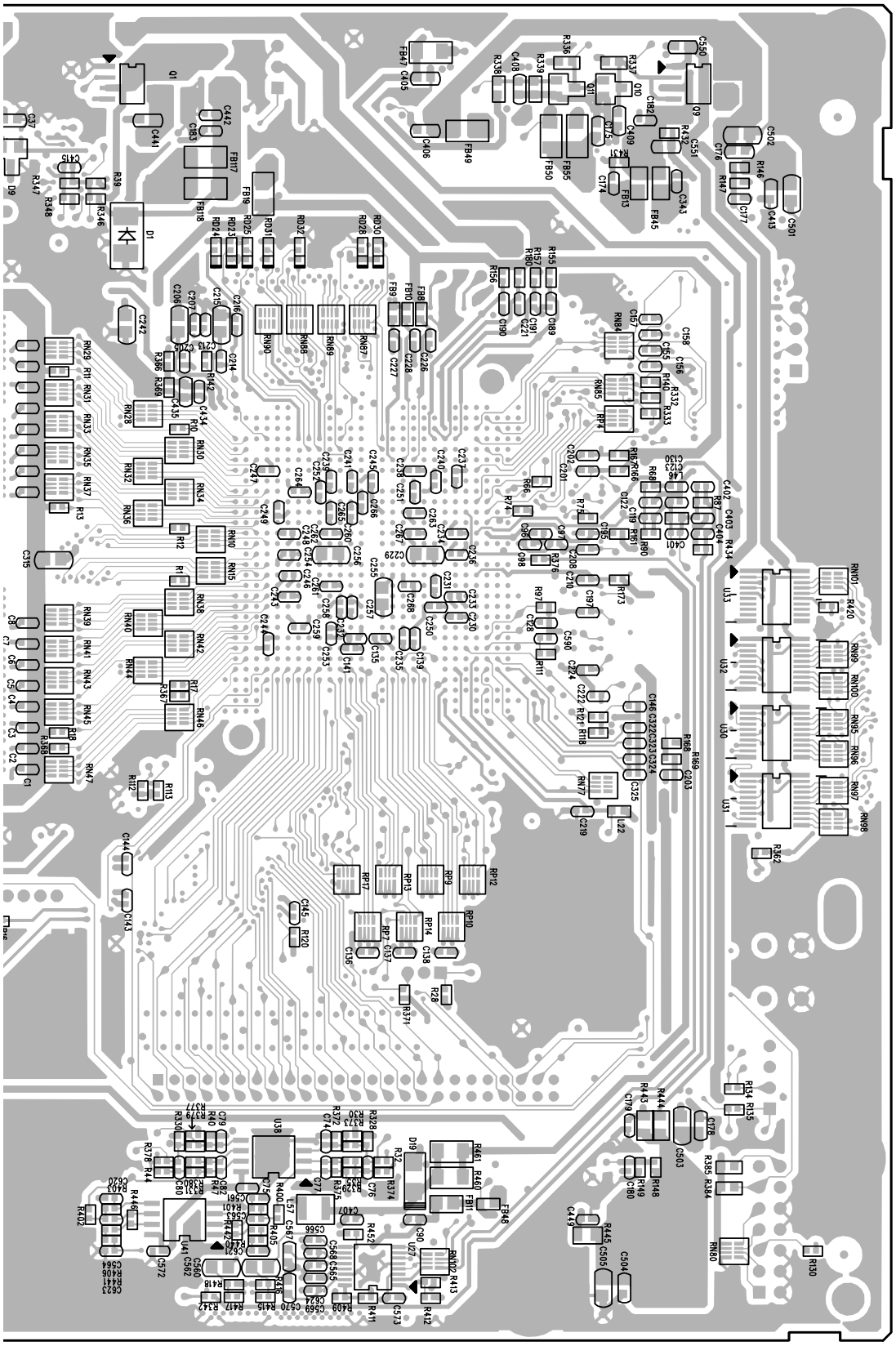

10.2 TANSHI, SIDE and PC ASSYS

SIDE A

SIDE A

PC ASSY

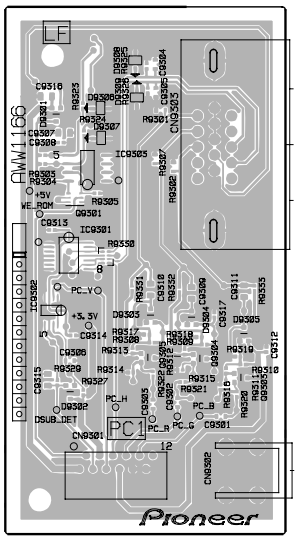

(ANP2151-C)

TANSHI ASSY

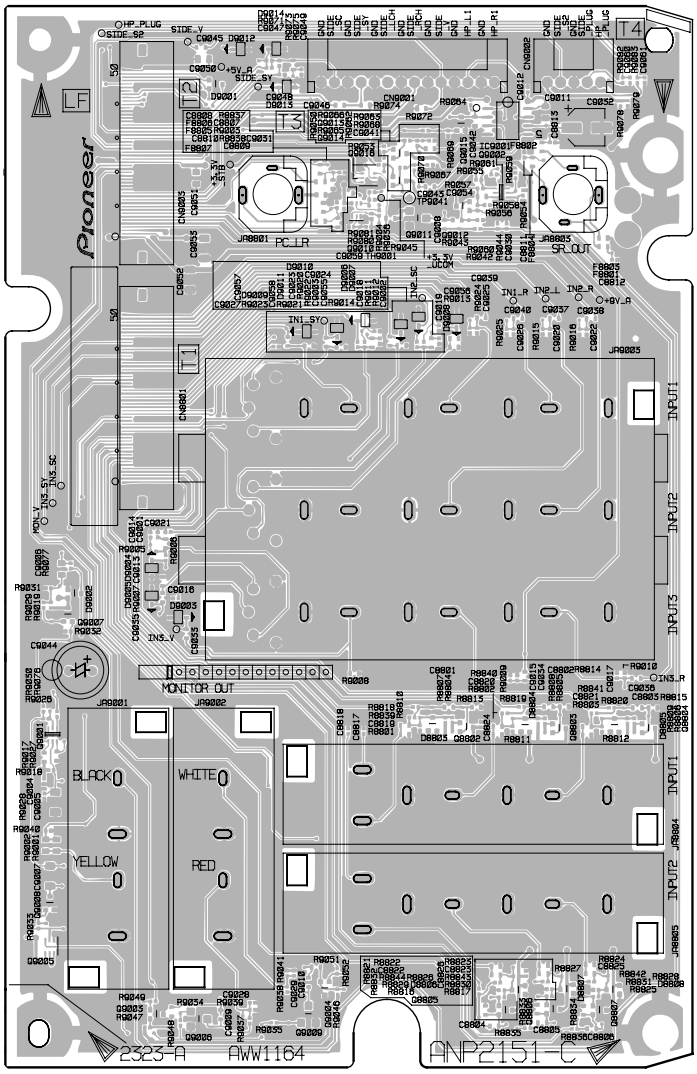

(ANP2151-C)

SIDE ASSY

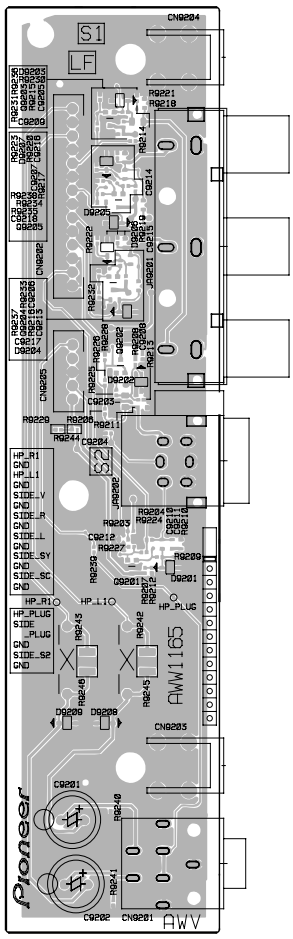

(ANP2151-C)

SIDE B

PC ASSY

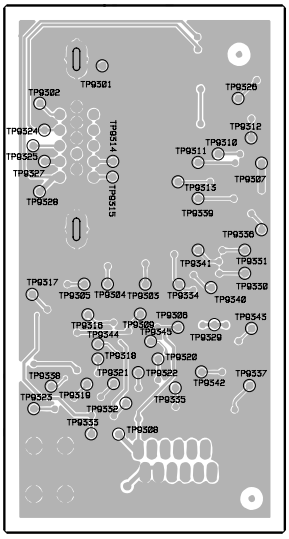

(ANP2151-C)

SIDE ASSY

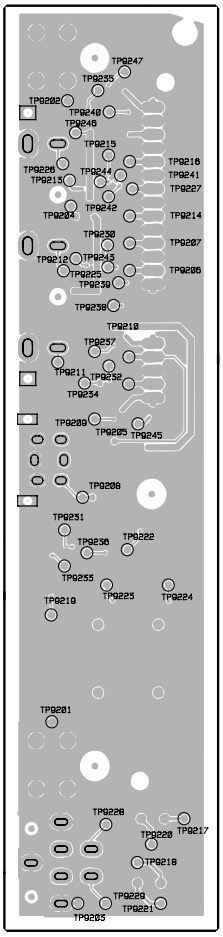

(ANP2151-C)

SIDE B

TANSHI ASSY

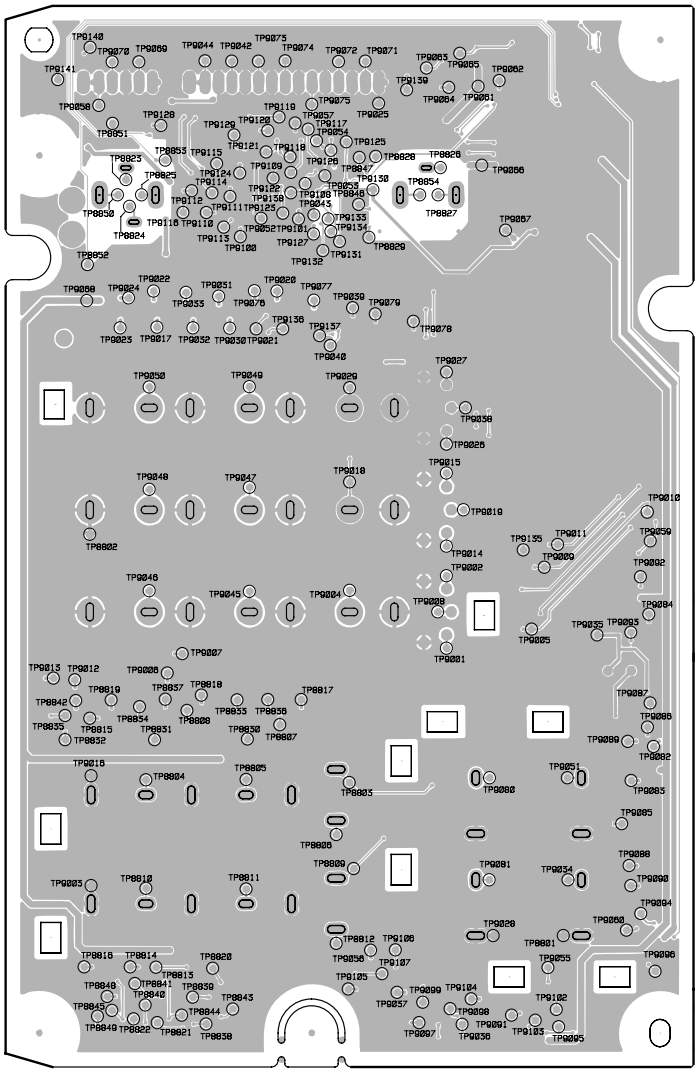

(ANP2151-C)

Pioneer sound.vision.soul

Service Manual

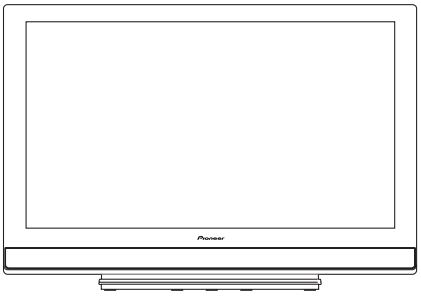

PDP-427XD

ORDER NO.
ARP3391

PLASMA TELEVISION

PDP-427XD
PDP-4270XD
PDP-427XA
PDP-4270XA

THIS MANUAL IS APPLICABLE TO THE FOLLOWING MODEL(S) AND TYPE(S).

Model	Type	Power Requirement	Remarks
PDP-427XD	WYVIXK5	AC 220 V to 240 V	
PDP-4270XD	WYVIXK5	AC 220 V to 240 V	
PDP-427XA	WYVIXK5	AC 220 V to 240 V	
	WYV5	AC 220 V to 240 V	
PDP-4270XA	WYVIXK5	AC 220 V to 240 V	
	WYV5	AC 220 V to 240 V	

For details, refer to "Important Check Points for good servicing".

PIONEER CORPORATION 4-1, Meguro 1-chome, Meguro-ku, Tokyo 153-8654, Japan
PIONEER ELECTRONICS (USA) INC. P.O. Box 1760, Long Beach, CA 90801-1760, U.S.A.
PIONEER EUROPE NV Haven 1087, Keetberglaan 1, 9120 Melsele, Belgium
PIONEER ELECTRONICS ASIACENTRE PTE. LTD. 253 Alexandra Road, #04-01, Singapore 159936
ⓒ**PIONEER CORPORATION 2006**

T-IZR SEPT. 2006 printed in Japan

1. NOTES ON SERVICE VISIT

1.1 SAFETY INFORMATION

This service manual is intended for qualified service technicians ; it is not meant for the casual do-it-yourselfer. Qualified technicians have the necessary test equipment and tools, and have been trained to properly and safely repair complex products such as those covered by this manual.

Improperly performed repairs can adversely affect the safety and reliability of the product and may void the warranty. If you are not qualified to perform the repair of this product properly and safely, you should not risk trying to do so and refer the repair to a qualified service technician.

WARNING

This product contains lead in solder and certain electrical parts contain chemicals which are known to the state of California to cause cancer, birth defects or other reproductive harm.

Health & Safety Code Section 25249.6 - Proposition 65

NOTICE
(FOR CANADIAN MODEL ONLY)
Fuse symbols (fast operating fuse) and/or (slow operating fuse) on PCB indicate that replacement parts must be of identical designation.

REMARQUE
(POUR MODÈLE CANADIEN SEULEMENT)
Les symboles de fusible (fusible de type rapide) et/ou (fusible de type lent) sur CCI indiquent que les pièces de remplacement doivent avoir la même désignation.

SAFETY PRECAUTIONS

NOTICE : Comply with all cautions and safety related notes located on or inside the cabinet and on the chassis.

The following precautions should be observed :

1. When service is required, even though the PDP UNIT an isolation transformer should be inserted between the power line and the set in safety before any service is performed.
2. When replacing a chassis in the set, all the protective devices must be put back in place, such as barriers, nonmetallic knobs, adjustment and compartment covershields, isolation resistor-capacitor, etc.
3. When service is required, observe the original lead dress. Extra precaution should be taken to assure correct lead dress in the high voltage circuitry area.
4. Always use the manufacture's replacement components. Especially critical components as indicated on the circuit diagram should not be replaced by other manufacture's. Furthermore where a short circuit has occurred, replace those components that indicate evidence of overheating.
5. Before returning a serviced set to the customer, the service technician must thoroughly test the unit to be certain that it is completely safe to operate without danger of electrical shock, and be sure that no protective device built into the set by the manufacture has become defective, or inadvertently defeated during servicing. Therefore, the following checks should be performed for the continued protection of the customer and servicetechnician.
6. Perform the following precautions against unwanted radiation and rise in internal temperature.
   - Always return the internal wiring to the original styling.
   - Attach parts (Gascket, Ferrite Core, Ground, Rear Cover, Shield Case etc.) surely after disassembly.
7. Perform the following precautions for the PDP panel.
   - When the front case is removed, make sure nothing hits the panel face, panel corner, and panel edge (so that the glass does not break).
   - Make sure that the panel vent does not break. (Check that the cover is attached.)
   - Handle the FPC connected to the panel carefully. Twisting or pulling the FPC when connecting it to the connector will cause it to peel off from the panel.
8. Pay attention to the following.
   - Pay extreme caution when the front case and rear panel are removed because this may cause a high risk of disturbance to TVs and radios in the surrounding.

Leakage Current Cold Check

With the AC plug removed from an AC power source, place a jumper across the two plug prongs. Turn the AC power switch on. Using an insulation tester (DC 500V), connect one lead to the jumpered AC plug and touch the other lead to each exposed metal part (input/output terminals, screwheads, metal overlays, control shafts, etc.), particularly any exposed metal part having a return path to the chassis. Exposed metal parts having a return path to the chassis should have a minimum resistor reading of 4 MΩ.
The below 4MΩ resistor value indicate an abnormality which require corrective action. Exposed metal parts not having a return path to the chassis will indicate an open circuit.

Leakage Current Hot Check

Plug the AC line cord directly into an AC power source (do not use an isolation transformer for this check).
Turn the AC power switch on.
Using a "Leakage Current Tester (Simpson Model 229 equivalent)", measure for current from all exposed metal parts of the cabinet (input/output terminals, screwheads, metal overlays, control shaft, etc.), particularly any exposed metal part having a return path to the chassis, to a known earth ground (water pipe, conduit, etc.). Any current measured must not exceed 1mA.

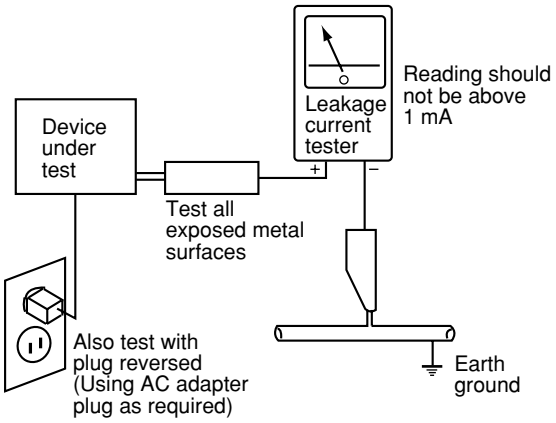

AC Leakage Test

ANY MEASUREMENTS NOT WITHIN THE LIMITS OUTLINED ABOVE ARE INDICATIVE OF A POTENTIAL SHOCK HAZARD AND MUST BE CORRECTED BEFORE RETURNING THE SET TO THE CUSTOMER.

PRODUCT SAFETY NOTICE

Many electrical and mechanical parts in PIONEER set have special safety related characteristics. These are often not evident from visual inspection nor the protection afforded by them necessarily can be obtained by using replacement components rated for higher voltage, wattage, etc. Replacement parts which have these special safety characteristics are identified in this Service Manual.
Electrical components having such features are identified by marking with a ⚠ on the schematics and on the parts list in this Service Manual.
The use of a substitute replacement component which dose not have the same safety characteristics as the PIONEER recommended replacement one, shown in the parts list in this Service Manual, may create shock, fire or other hazards.
Product Safety is continuously under review and new instructions are issued from time to time. For the latest information, always consult the current PIONEER Service Manual. A subscription to, or additional copies of, PIONEER Service Manual may be obtained at a nominal charge from PIONEER.

■ Charged Section

The places where the commercial AC power is used without passing through the power supply transformer.
If the places are touched, there is a risk of electric shock. In addition, the measuring equipment can be damaged if it is connected to the GND of the charged section and the GND of the non-charged section while connecting the set directly to the commercial AC power supply. Therefore, be sure to connect the set via an insulated transformer and supply the current.

1. Power cord
2. AC inlet
3. Power switch (S1)
4. Fuse (In the POWER SUPPLY Unit)
5. STB transformer and Converter transformer (In the POWER SUPPLY Unit)
6. Other primary side of the POWER SUPPLY Unit

: Part is Charged Section.

: Part is the High Voltage Generating Points other than the Charged Section.

■ High Voltage Generating Point

The places where voltage is 100 V or more except for the charged places described above. If the places are touched, there is a risk of electric shock.
The VSUS voltage remains for several minutes after the power to the unit is turned off. These places must not be touched until about 10 minutes after the power is turned off, or it is confirmed with a tester that there is no residual VSUS voltage.

If the procedures described in "10.3 POWER ON/OFF FUNCTION FOR THE LARGE-SIGNAL SYSTEM" are performed before the power is turned off, the voltage will be discharged in about 30 seconds.

POWER SUPPLY Unit.....(205 V)
42 X DRIVE Assy.....(–180 V to 205 V)
42 Y DRIVE Assy.....(500 V)
42 SCAN A Assy..... (500 V)
42 SCAN B Assy..... (500 V)
SUS CLAMP 1 Assy.....(–180 V to 205 V)
SUS CLAMP 2 Assy.....(–180 V to 205 V)

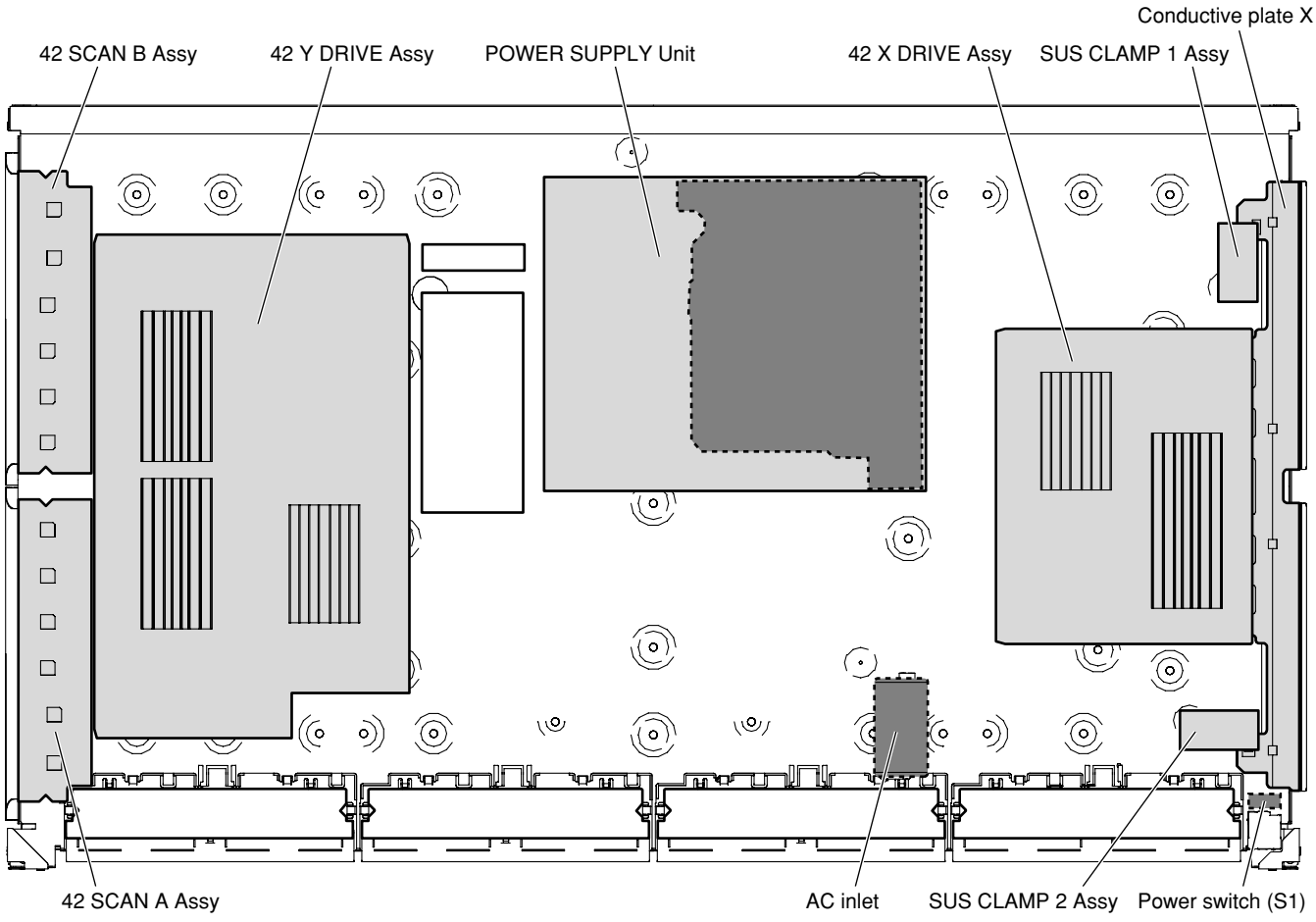

Fig. High Voltage Generating Point (Rear view)

[Important Check Points for Good Servicing]

In this manual, procedures that must be performed during repairs are marked with the below symbol.
Please be sure to confirm and follow these procedures.

1. Product safety

Please conform to product regulations (such as safety and radiation regulations), and maintain a safe servicing environment by following the safety instructions described in this manual.

① Use specified parts for repair.

Use genuine parts. Be sure to use important parts for safety.

② Do not perform modifications without proper instructions.

Please follow the specified safety methods when modification(addition/change of parts) is required due to interferences such as radio/TV interference and foreign noise.

③ Make sure the soldering of repaired locations is properly performed.

When you solder while repairing, please be sure that there are no cold solder and other debris.
Soldering should be finished with the proper quantity. (Refer to the example)

④ Make sure the screws are tightly fastened.

Please be sure that all screws are fastened, and that there are no loose screws.

⑤ Make sure each connectors are correctly inserted.

Please be sure that all connectors are inserted, and that there are no imperfect insertion.

⑥ Make sure the wiring cables are set to their original state.

Please replace the wiring and cables to the original state after repairs.
In addition, be sure that there are no pinched wires, etc.

⑦ Make sure screws and soldering scraps do not remain inside the product.

Please check that neither solder debris nor screws remain inside the product.

⑧ There should be no semi-broken wires, scratches, melting, etc. on the coating of the power cord.

Damaged power cords may lead to fire accidents, so please be sure that there are no damages.
If you find a damaged power cord, please exchange it with a suitable one.

⑨ There should be no spark traces or similar marks on the power plug.

When spark traces or similar marks are found on the power supply plug, please check the connection and advise on secure connections and suitable usage. Please exchange the power cord if necessary.

⑩ Safe environment should be secured during servicing.

When you perform repairs, please pay attention to static electricity, furniture, household articles, etc. in order to prevent injuries.
Please pay attention to your surroundings and repair safely.

2. Adjustments

To keep the original performance of the products, optimum adjustments and confirmation of characteristics within specification.
Adjustments should be performed in accordance with the procedures/instructions described in this manual.

3. Lubricants, Glues, and Replacement parts

Use grease and adhesives that are equal to the specified substance.
Make sure the proper amount is applied.

4. Cleaning

For parts that require cleaning, such as optical pickups, tape deck heads, lenses and mirrors used in projection monitors, proper cleaning should be performed to restore their performances.

5. Shipping mode and Shipping screws

To protect products from damages or failures during transit, the shipping mode should be set or the shipping screws should be installed before shipment. Please be sure to follow this method especially if it is specified in this manual.

1.2 QUICK REFERENCE UPON SERVICE VISIT

Quick Reference upon Service Visit ①
Notes, PD/SD diagnosis, and methods for various settings

Notes when visiting for service

1. Notes when disassembling/reassembling

① **Rear case**
When reassembling the rear case, the screws must be tightened in a specific order. Be careful not to tighten them in the wrong order forcibly. For details, see "Rear Case" in "6. DISASSEMBLY"

② **Attaching screws for the HDMI connector**
When attaching the HDMI connector after replacing the Main Assy, secure the HDMI connector manually with a screwdriver, but not with an electric screwdriver. If you tighten the screws too tightly with an electric screwdriver, the screw heads may be damaged, in which case the screws cannot be untightened/tightened any more.

2. On parts replacement

① **How to discharge before replacing the Assys**
A charge of significant voltage remains in the Plasma Panel even after the power is turned off. Safely discharge the panel before replacement of parts, in either manner indicated below:
A: Let the panel sit at least for 3 minutes after the power is turned off.
B: Turn the Large Signal System off before the power is turned off then, after 1 minute, turn the power off.
For details, see "10.2 Power ON/OFF Function for the Large-Signal System."

② **On the settings after replacement of the Assys**
Some boards need settings made after replacement of the Assys. For details, see "7. ADJUSTMENT"

3. On various settings

① **SR+**
After a repair using a PC, be sure to restore the setting for the RS-232C connector to SR+.

② **Setting in Factory mode**
After a Mask indication into the panel is performed, be sure to set the Mask setting to "OFF" then exit Factory mode.

PD/SD

	Item	No. of LEDs flashing: Red	Blue
Panel section	Communication with the panel drive IC		Blue 1
	Communication with the module IIC		Blue 2
	DIGTAL-RST2		Blue 3
	Panel high temperature		Blue 4
Main section	Audio		Blue 5
	Communication with the Module microcomputer		Blue 6
	Main 3-wire serial communication		Blue 7
	Main IIC communication		Blue 8
	Communication with the Main microcomputer		Blue 9
	FAN		Blue 10
	Unit high temperature		Blue 11
	Communication with the D-TUNER		Blue 12
	MTB-RST2/RST4		Blue 13
POWER		Red 2	
SCAN		Red 3	
SCN-5V		Red 4	
Y-DRIVE		Red 5	
Y-DCDC		Red 6	
Y-SUS		Red 7	
ADRS		Red 8	
X-DRIVE		Red 9	
X-DCDC		Red 10	
X-SUS		Red 11	
UNKNOWN		Red 15	

Change of settings

How to enter Factory mode using the supplied remote control unit

In the same way as with the remote control unit supplied with the 6th-generation model

How to enter Integrator mode using the supplied remote control unit

① Enter the Standby mode.
② Press [MENU].
③ Press [TV ⏻].

How to switch UART ① (Integrator)

① Enter the Integrator mode.
② Display "OFF" using [➡].
③ Change the communication speed using [⬇], then [➡].

How to switch UART ② (During Standby)

① Enter the Standby mode.
② Hold [VOL +] or [VOL -] pressed for 3 seconds.
③ Hold [SPLIT] pressed for 3 seconds.
④-1 To set to 232C, press [ENTER].
⑤-2 To set to SR+, press [HOME MENU].

Note: If switching is completed successfully, the red LED will flash twice.
Note 1: Use a remote control unit supplied with the 6th-generation models or later.
Note 2: Do not hold a key pressed for more than 5 seconds.

How to locate several items on the Factory menu

{ } : Item on the Factory menu
[ ] : Key on the remote control unit
" " : Screen indication

1. Confirmation of accumulated power-on time and power-on count
Select {INFORMATION} then {HOUR METER}.
(After entering Factory mode, press [⬇] four times.)

2. Confirmation of the Power-down and Shutdown histories

① **Panel system**
PD: Select {PANEL FACTORY} then {POWER DOWN}.
(After entering Factory mode, press [MUTING] once, press [ENTER], then press [⬇] three times.)
SD: Select {PANEL FACTORY} then {SHUT DOWN}.
(After entering Factory mode, press [MUTING] once, press [ENTER], then press [⬇] four times.)

② **Main Assy**
Select {INFORMATION} then {MAIN NG}.
(After entering Factory mode, press [⬇] three times.)

3. How to display the Mask indication

① **Mask indication in the panel side**
1. Select {PANEL FACTORY} then {RASTER MASK SETUP}.
(After entering Factory mode, press [MUTING] once, press [ENTER], then press [⬇] 8 times.)
2. Press [ENTER], then select a Mask indication, using [⬆] or [⬇].

② **Mask (SG screen) indication in the Main Assy (MAIN VDEC)**
1. Select either Input 1 or 2, to which no signal is input (black screen).
2. Select {INITIALIZE} then {SG MODE}. Press [⬅]. (After entering Factory mode, press [MUTING] three times, then press [⬇] once.) Then, the indication at the lower right of the screen changes from "OFF" to "ANA AD YCBCR".
3. You can change Mask patterns by pressing [⬇] to select {SG PATTERN} then using [⬅] or [➡].

Note: When you switch "SG MODE" routes, some displays become monochrome, as they are in Y-signal only mode.

Adjustments and Settings after replacement of the Assys (Procedures in Factory mode)

1. Digital Video Assy: Transfer of backup data
① Select {PANEL FACTORY}, {ETC}, then {BACKUP DATA}. (After entering Factory mode, press [MUTING] once, press [ENTER], press [⬇] seven times, then press [ENTER].)
② Select {TRANSFER}, using [➡], then hold [SET] pressed for at least 5 seconds.
③ After transfer of backup data is completed, {ETC} is automatically selected, and the LED on the front panel returns to normal lighting.

2. MAIN Assy : Switching to SR+ from RS-232C
① Enter the Integrator mode. (The way is described above.)
② As SR+ <=> is [OFF] state, switch to [ON] state by using [➡].
③ Turn the POWER switch of the main unit off by the remote control.

3. POWER SUPPLY Unit: Clearance of the accumulated power-on count and maximum temperature value
① Select {PANEL FACTORY}, {ETC}, then {P COUNT INFO}. (After entering Factory mode, press [MUTING] once, press [ENTER], press [⬇] seven times, press [ENTER], then press [⬇] six times.)
② Press [➡] to select "CLEAR". Hold [SET] pressed for at least 5 seconds.
After clearance is completed, "ETC" is automatically selected. Clear the maximum temperature value (MAX TEMP) in the same manner.

4. Other Assys: Clearance of the maximum temperature value
① Select {PANEL FACTORY}, {ETC}, then {MAX TEMP}. (After entering Factory mode, press [MUTING] once, press [ENTER], press [⬇] seven times, press [ENTER], then press [⬇] seven times.)
② Press [➡] to select "CLEAR". Hold [SET] pressed for at least 5 seconds.
After clearance is completed, "ETC" is automatically selected.

Quick Reference upon Service Visit ②
Mode transition and structure of layers in Service Factory mode

Mode transition in Service Factory mode

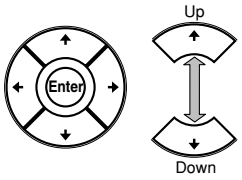

- To shift to another mode, press [MUTING].
- To shift to another item in a specific mode, press [⬆] or [⬇].
- To shift to the next nested layer below for an item with a "(+)" indication, press [ENTER]. To return to the next nested layer above, also press [ENTER].

INFORMATION mode
1. VERSION (1)
2. VERSION (2)
3. MAIN NG
4. TEMPERATURE
5. HOUR METER
6. HDMI SIGNAL INFO1
7. HDMI SIGNAL INFO2
8. VDEC SIGNAL INFO

MUTING

INITIALIZE mode
1. SYNC DET
2. SG MODE
3. SG PATTERN
4. SIDE MASK LEVEL
5. FINAL SETUP
6. CVT AUTO
7. HDMI INTR POSITION

MUTING

PANEL FACTORY mode
1. PANEL INFORMATION
2. PANEL WORKS
3. POWER DOWN
4. SHUT DOWN
5. PANEL-1 ADJ
6. PANEL-2 ADJ
7. PANEL REVICE
8. ETC.
9. RASTER MASK SETUP
10. PATTEN MASK SETUP
11. COMBI MASK SETUP

MUTING

OPTION mode
1. EDID WRITE MODE
2. CH PRESET

MUTING

Structure of Layers in Service Factory Mode

INFORMATION mode	
├ 1. VERSION (1)	Flash Versions for PANEL system and MAIN system
├ 2. VERSION (2)	Flash Versions for DTV system
├ 3. MAIN NG	SD histories for MAIN (Going Clear model by SET key)
│ └ 3-1. CLEAR	Select Yes by [➡] key ➡ pushing and hold [SET] key
├ 4. TEMPERATURE	TEMP 1, TEMP2 and FAN mode are displayed
├ 5. HOUR METER	Hour meter and number of Power ON are displayed
│ └ 5-1. CLEAR	Select Yes by [➡] key ➡ pushing and hold [SET] key
├ 6. HDMI SIGNAL INFO 1	For factory use
├ 7. HDMI SIGNAL INFO 2	Signal info of HDMI are displayed (Detail are on SM)
├ 8. VDEC SIGNAL INFO	For factory use
PANEL FACTORY mode	Refer to [PANEL FACTORY MODE]
OPTION	
├ 1. EDID WRITE MODE	For factory use
├ 2. CH PRESET	For production line use
INITIALIZE	
├ 1. SYNC DET (+)	For factory use
│ 2. SG MODE	SG signal from MAIN VDEC (Composite signal is required)
│ 3. SG PATTERN	For factory use
├ 4. SIDE MASK LEVEL(+)	For factory use
│ ├ 4-1. R MASK LEVEL	
│ ├ 4-2. G MASK LEVEL	
│ └ 4-3. B MASK LEVEL	
├ 5. FINAL SETUP	Set to Factory default settings (it should perform after
│ └ 5-1. DATA RESET	replacing a MAIN board)
├ 6. CVT AUTO	For factory use
└ 7. HDMI INTR POSITION(+)	For factory use

Structure of Layers in Panel Factory Mode 1

1. PANEL INFORMATION	Version indication of the panel
2. PANEL WORKS	Indications of the accumulated power-on time, pulse-meter count, and power-on count of the panel
3. POWER DOWN	Indication of the Power-down history
4. SHUT DOWN	Indication of the Shutdown history
5. PANEL-1 ADJ (+)	
├ 1. X-SUS B	Modification not required because these items are basically for factory presetting
├ 2. Y-SUS B	
├ 3. Y-SUSTAIL T1	
├ 4. Y-SUSTAIL T2	
├ 5. Y-SUSTAIL W	
├ 6. XY-RST W1	
├ 7. XY-RST W2	
├ 8. VOL SUS	Settings required after replacement of the panel
├ 9. VOL OFFSET	
├ 10. VOL RST P	
├ 11. SUS FREQ.	For AM noise prevention (Depending on the mode, brightness of the screen changes.)
6. PANEL-2 ADJ (+)	
├ 1. R-HIGH	Parameters for the WB adjustment of the panel, which are required during adjustment after panel replacement
├ 2. G-HIGH	
├ 3 .B-HIGH	
├ 4. R-LOW	
├ 5. G-LOW	
├ 6. B-LOW	
├ 7. ABL	Setting of the power consumption. A setting table is available for each vertical signal.

To "Structure of Layers in Panel Factory Mode 2"

Structure of Layers in Panel Factory Mode 2

7. PANEL REVISE (+)	
├ R-LEVEL	Items for use by engineers
├ G-LEVEL	
├ B-LEVEL	
8. ETC (+)	
├ 1. BACKUP DATA	For transferring backup data (after replacement of the DIGITAL Assy)
├ 2. DIGITAL EEPROM	To clear data of the digital video
├ 3. PD INFO.	For clearance of data for the corresponding items. The clearing method is the same: Select "CLEAR", using [➡], then hold [SET] pressed for at least 5 seconds. After clearance is completed, {ETC} is automatically selected.
├ 4. SD INFO.	
├ 5. HR-MTR INFO.	
├ 6. PM/B1-B5	
├ 7. P COUNT INFO.	
├ 8. MAX TEMP.	
9. RASTER MASK SETUP (+)	
├ 1. MASK OFF	For use while Raster Mask (full mask) is displayed. Use [⬆] or [⬇] to select the type of mask.
├ 2. RST MASK 01	
≈ • • • • •	
└ 25. RST MASK 24	
10. PATTEN MASK SETUP (+)	
├ 1. MASK OFF	For use while Pattern Mask is displayed. Use [⬆] or [⬇] to select the type of mask.
├ 2. PTN MASK 01	
≈ • • • • •	
└ 40. PTN MASK 39	
11. COMBI MASK SETUP (+)	
├ 1. MASK OFF	For use while Combination Mask is displayed. Use [⬆] or [⬇] to select the type of mask.
├ 2. CMB MASK 01	
≈ • • • • •	
└ 11. CMB MASK 10	

1.3 JIGS LIST

■ Cleaning

Name	Part No.	Remarks
Cleaning liquid	GEM1004	Used to fan cleaning. Refer to "2.4 CHASSIS SECTION (1/2).
Cleaning paper	GED-008	

CONTENTS

1. NOTES ON SERVICE VISIT....2
1.1 SAFETY INFORMATION....2
1.2 QUICK REFERENCE UPON SERVICE VISIT....6
1.3 JIGS LIST....8
2. EXPLODED VIEWS AND PARTS LIST....10
2.1 PACKING SECTION....10
2.2 REAR SECTION....12
2.3 FRONT SECTION....14
2.4 CHASSIS SECTION (1/2)....16
2.5 CHASSIS SECTION (2/2)....18
2.6 PANEL CHASSIS SECTION....20
2.7 MULTI BASE SECTION....22
2.8 PDP SERVICE PANEL ASSY 427 (AWU1208)....24
2.9 TABLE TOP STAND (PDP-4270XD and PDP-4270XA ONLY)....25
3. PCB PARTS LIST....26
4. BLOCK DIAGRAM AND SCHEMATIC DIAGRAM....42
4.1 OVERALL WIRING DIAGRAM (1/2)....42
4.2 OVERALL WIRING DIAGRAM (2/2)....44
4.3 OVERALL BLOCK DIAGRAM (1/2)....46
4.4 OVERALL BLOCK DIAGRAM (2/2)....48
4.5 POWER SUPPLY UNIT....49
4.6 42 X DRIVE, SUS CLAMP 1 and SUS CLAMP 2 ASSYS....50
4.7 42 Y DRIVE ASSY....51
4.8 POWER SUPPLY BLOCK of 42 X DRIVE and 42 Y DRIVE ASSYS....52
4.9 42 SCAN A and 42 SCAN B ASSYS....53
4.10 42 ADDRESS ASSY....54
4.11 42 DIGITAL ASSY....55
4.12 SIGNAL BLOCK DIAGRAM....56
4.13 R07 DT ASSY (PDP-4270XD and PDP-427XD ONLY)....58
4.14 POWER SUPPLY BLOCK of MAIN ASSY....59
4.15 42E AUDIO ASSY....60
4.16 POWER SUPPLY BLOCK of 42E AUDIO, LED IR and SIDE KEY ASSYS....61
4.17 VOLTAGES....62
4.18 WAVEFORMS....70
5. DIAGNOSIS....74
5.1 TROUBLE SHOOTING....74
5.1.1 FLOWCHART OF FAILURE ANALYSIS FOR THE WHOLE UNIT....74
5.1.2 FLOWCHART OF FAILURE ANALYSIS FOR THE POWER SUPPLY UNIT....76
5.1.3 FLOWCHART OF FAILURE ANALYSIS FOR THE DIGITAL ASSY....77
5.1.4 FLOWCHART OF FAILURE ANALYSIS FOR THE DRIVE ASSY....78
5.1.5 FLOWCHART OF FAILURE ANALYSIS FOR THE MAIN ASSY....82
5.1.6 FLOWCHART OF FAILURE ANALYSIS FOR THE VIDEO SYSTEM....83
5.1.7 FLOWCHART OF FAILURE ANALYSIS FOR THE AUDIO SYSTEM....90
5.2 DIAGNOSIS OF PD (POWER-DOWN)....93
5.2.1 BLOCK DIAGRAM OF THE POWER-DOWN SIGNAL....93
5.2.2 DIAGNOSIS OF THE PD (POWER-DOWN)....94
5.3 DIAGNOSIS OF SD (SHUTDOWN)....97
5.3.1 BLOCK DIAGRAM OF THE SHUTDOWN SIGNAL....97
5.3.2 SD (SHUTDOWN) DIAGNOSIS....98
5.4 INFORMATION ON SYMPTOMS THAT DO NOT CONSTITUTE FAILURE....99
6. DISASSEMBLY....100
6.1 PCB LOCATION....100

6.2 DISASSEMBLY 101
7. ADJUSTMENT 107
7.1 ADJUSTMENT REQUIRED WHEN THE SET IS REPAIRED OR REPLACED 107
7.2 ADJUSTMENT REQUIRED WHEN PART IS REPLACED 108
7.3 BACKUP WHEN THE PANEL UNIT IS ADJUSTED 109
7.4 HOW TO CLEAR HISTORY DATA 112
7.5 ADJUSTMENT WHEN THE SERVICE PANEL ASSY IS REPLACED 113
8. SERVICE FACTORY MODE 115
8.1 OUTLINE OF THE SERVICE FACTORY 115
8.1.1 SERVICE FACTORY MODE TRANSITION CHART 115
8.1.2 HOW TO ENTER/EXIT SERVICE FACTORY MODE 115
8.1.3 OPERATION OF SERVICE FACTORY MODE 115
8.1.4 REMOTE COTROL CODE 116
8.1.5 FACTORY HIERARCHICAL TABLE 117
8.1.6 INDICATIONS IN SERVICE FACTORY MODE 118
8.2 FACTORY MENU 120
8.2.1 INFORMATION 120
8.2.2 PANEL FACTORY 128
8.2.3 OPTION 138
8.2.4 INITIALIZE 138
9. RS-232C 141
9.1 OUTLINE OF RS-232C COMMAND 141
9.1.1 PREPARED TOOLS 141
9.1.2 USING RS-232C COMMANDS 141
9.1.3 COMMAND PROTOCOL 142
9.1.4 COMMAND DEFINITION 143
9.2 LIST OF RS-232C COMMANDS 145
9.3 OUTLINE OF EACH COMMANDS 151
9.3.1 ACQUISITION OF PANEL STATUS • • • [QS1] 151
9.3.2 ACQUISITION OF PANEL OPERATION DATA • • • [QS2] 152
9.3.3 ACQUISITION OF OTHER DATA ON THE PANEL • • • [QIP] 153
9.3.4 ACQUISITION OF PANEL ADJUSTMENT DATA (COMMON DATA) • • • [QAJ] 153
9.3.5 ACQUISITION OF ABL/WB ADJUSTMENT DATA • • • [QPW] 154
9.3.6 ACQUISITION OF PULSE METER VALUE • • • [QPM] 154
9.3.7 ACQUISITION OF PD LOGS • • • [QPD] 155
9.3.8 ACQUISITION OF SD LOGS • • • [QSD] 156
9.3.9 QS6 157
9.3.10 QMT 157
9.3.11 QNG 158
9.3.12 DRV 159
9.3.13 OTHER COMMANDS 160
10. GENERAL INFORMATION 161
10.1 POWER ON SEQUENCE 161
10.2 POWER SUPPLY TRANSITION STATUS 164
10.3 POWER ON/OFF FUNCTION FOR THE LARGE-SIGNAL SYSTEM 165
10.4 LED INFORMATION 166
10.5 SPECIFICATION ABOUT THE THERMAL PROTECTION 167
10.6 PROCESSING IN ABNORMALITY 168
11. SPECIFICATIONS 170
11.1 SPECIFICATIONS 170
11.2 ACCESSORIES 171
11.3 PANEL FACILITIES 172
11.3.1 PDP-427XD, PDP-4270XD 172
11.3.2 PDP-427XA, PDP-4270XA 177
12. IC INFORMATION 182

2. EXPLODED VIEWS AND PARTS LIST

NOTES:
- *Parts marked by "NSP" are generally unavailable because they are not in our Master Spare Parts List.*
- *The ⚠ mark found on some component parts indicates the importance of the safety factor of the part. Therefore, when replacing, be sure to use parts of identical designation.*
- *Screws adjacent to ▼ mark on product are used for disassembly.*
- *For the applying amount of lubricants or glue, follow the instructions in this manual. (In the case of no amount instructions, apply as you think it appropriate.)*

2.1 PACKING SECTION

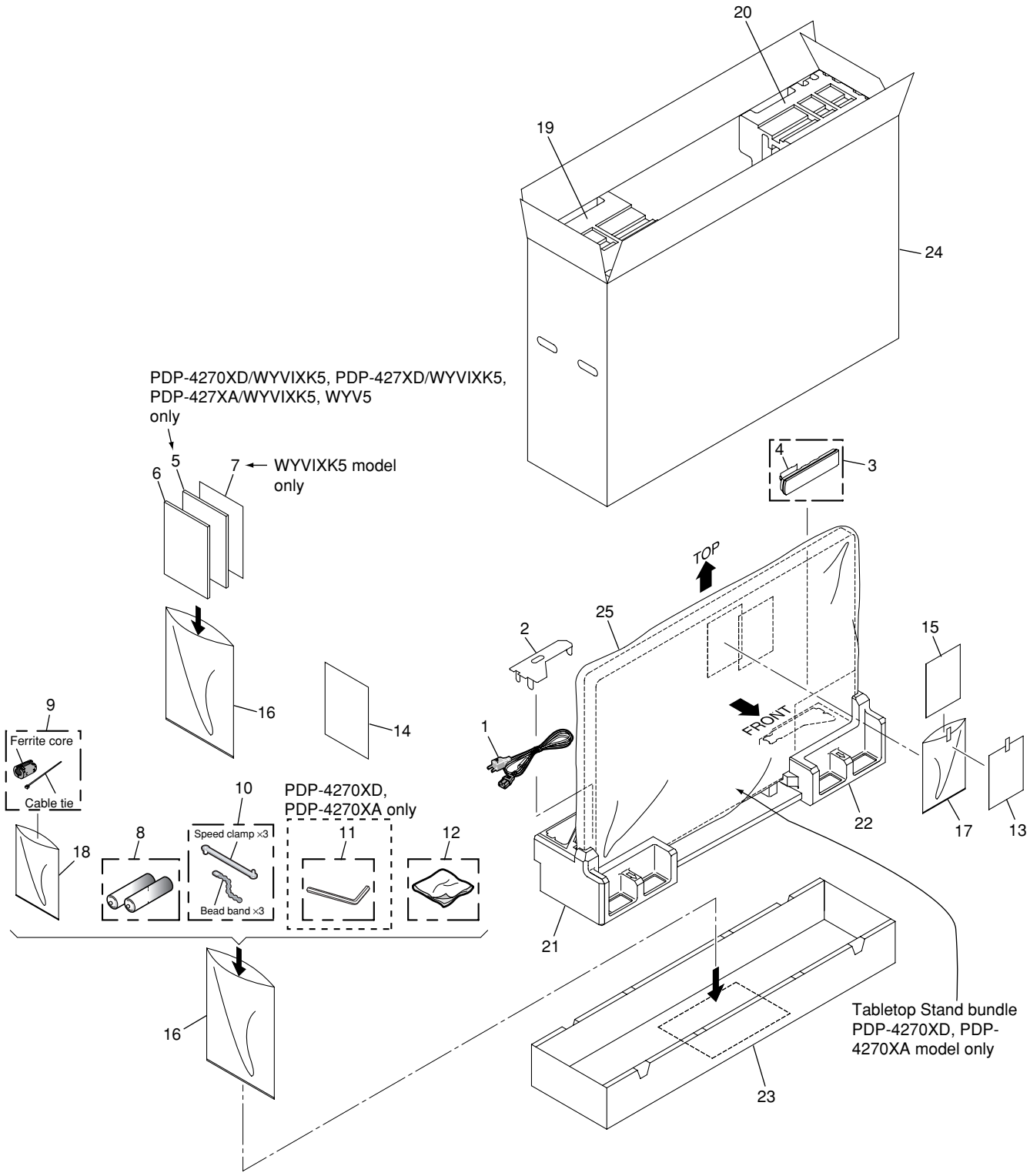

(1) PACKING SECTION PARTS LIST

Mark	No.	Description	Part No.
⚠	1	Power Cord (2 m)	ADG1214
	2	Power Cord Lid	See Contrast table (2)
	3	Remote Control Unit	See Contrast table (2)
	4	Battery Cover	See Contrast table (2)
	5	Operating Instructions (Italian,Dutch,Spanish)	See Contrast table (2)
	6	Operating Instructions (English,French,German)	See Contrast table (2)
	7	Block Diagram	See Contrast table (2)
NSP	8	Dry Cell Battery (R06, AA)	VEM1031
⚠	9	Ferrite Core (L5321)	ATX1039
	10	Binder Assy	AEC1908
NSP	11	Hexagonal Wrench (6 mm)	See Contrast table (2)
	12	Cleaning Cloth	AED1285
	13	Caution Card	See Contrast table (2)
	14	Cleaning Caution	See Contrast table (2)
NSP	15	Warranty Card	ARY1114
	16	Polyethylene Bag	AHG1340
	17	Polyethylene Bag	AHG1326
	18	Polyethylene Bag	AHG1337
	19	Pad (427 T-L)	See Contrast table (2)
	20	Pad (427 T-R)	See Contrast table (2)
	21	Pad (427 B-L)	See Contrast table (2)
	22	Pad (427 B-R)	See Contrast table (2)
	23	Under Carton (427)	See Contrast table (2)
	24	Upper Carton	See Contrast table (2)
	25	Mirror Mat	See Contrast table (2)

(2) CONTRAST TABLE

PDP-427XD/WYVIXK5, PDP-4270XD/WYVIXK5, PDP-4270XA/WYVIXK5, WYV5, PDP-427XA/WYVIXK5 and WYV5 are constructed the same except for the following:

Mark	No.	Symbol and Description	PDP-427XD /WYVIXK5	PDP-4270XD /WYVIXK5	PDP-4270XA /WYVIXK5	PDP-427XA /WYVIXK5	PDP-4270XA /WYV5	PDP-427XA /WYV5
	2	Power Cord Lid	AHC1087	AHC1087	AHC1087	AHC1087	AHC1085	AHC1085
	3	Remote Control Unit	AXD1532	AXD1515	AXD1541	AXD1540	AXD1541	AXD1540
	4	Battery Cover	AZA7626	AZA7424	AZA7424	AZN2626	AZA7424	AZN2626
	5	Operating Instructions (Italian,Dutch,Spanish)	ARC1562	ARC1565	Not used	ARC1564	Not used	ARC1563
	6	Operating Instructions (English,French,German)	ARE1428	ARE1431	ARE1433	ARE1430	ARE1432	ARE1429
	7	Block Diagram	ARY1189	ARY1189	ARY1189	ARY1189	Not used	Not used
NSP	11	Hexagonal Wrench (6 mm)	Not used	AEF1029	AEF1029	Not used	AEF1029	Not used
	13	Caution Card	ARM1310	ARM1310	ARM1310	ARM1310	ARM1232	ARM1232
	14	Cleaning Caution PTK	ARM1311	ARM1311	ARM1311	ARM1311	Not used	Not used
	14	Wiping Cloth Caution	Not used	Not used	Not used	Not used	ARM1283	ARM1283
	19	Pad (427 T-L)	AHA2554	AHA2554	AHA2554	AHA2554	AHA2534	AHA2534
	20	Pad (427 T-R)	AHA2555	AHA2555	AHA2555	AHA2555	AHA2535	AHA2535
	21	Pad (427 B-L)	AHA2600	AHA2600	AHA2600	AHA2600	AHA2592	AHA2592
	22	Pad (427 B-R)	AHA2601	AHA2601	AHA2601	AHA2601	AHA2593	AHA2593
	23	Under Carton (427)	AHD3496	AHD3496	AHD3496	AHD3496	AHD3471	AHD3471
	24	Upper Carton	AHD3515	AHD3514	AHD3497	AHD3517	AHD3513	AHD3516
	25	Mirror Mat	AHG1327	AHG1327	AHG1327	AHG1327	AHG1284	AHG1284

2.2 REAR SECTION

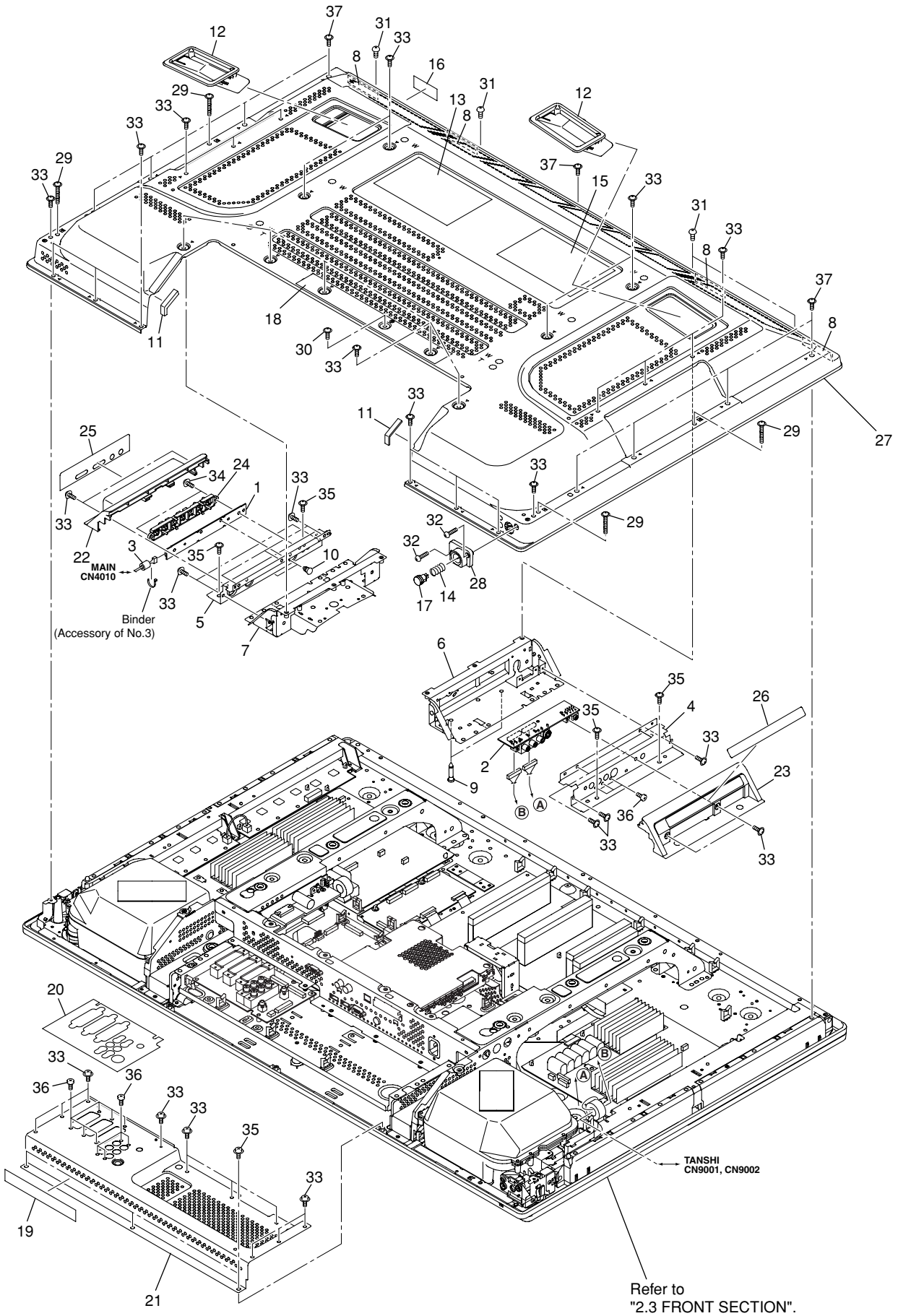

(1) REAR SECTION PARTS LIST

Mark	No.	Description	Part No.
	1	SIDE KEY Assy	AWW1133
	2	SIDE Assy	AWW1162
	3	Filter	CTX1054
	4	Side Input Panel (E)	ANC2418
	5	Function Button Base	ANG2923
	6	Side Input Shield	ANK1834
	7	Function Button Shield	ANK1835
	8	Rear Case Cushion	AEB1439
NSP	9	PCB Support	AEC1288
	10	Locking Card Spacer	AEC2019
	11	Protection Sheet C	AED1300
	12	Inner Grip Assy	AMR3434
NSP	13	Name Label	See Contrast table (2)
	14	Coil Spring	ABH1125
	15	Bolt Caution Label	See Contrast table (2)
	16	Serial Seal	AAX3143
	17	Power Button	AAD4145
	18	Terminal Label A	See Contrast table (2)
	19	Terminal Label C	See Contrast table (2)
	20	Terminal Label B	See Contrast table (2)
	21	Terminal Panel B	See Contrast table (2)
	22	Function Button Panel	AMB2906
	23	Side Input Cover	AMB2911
	24	Function Button (E)	AAC1565
	25	Function Button Sheet (E)	AAK2896
	26	Input Cover Label E	See Contrast table (2)
	27	Rear Case (427)	ANE1655
	28	Power Button Holder	AMR3539
	29	Screw (3 x 40P)	ABA1332
	30	Screw	ABA1341
	31	Screw (4 x 18)	ABA1353
	32	Screw	BPZ30P140FTB
	33	Screw	AMZ30P060FTB
	34	Screw	AMZ30P080FTC
	35	Screw	APZ30P080FTB
	36	Screw	BPZ30P080FTB
	37	Screw	TBZ40P080FTB

(2) CONTRAST TABLE

PDP-427XD/WYVIXK5, PDP-4270XD/WYVIXK5, PDP-4270XA/WYVIXK5, WYV5, PDP-427XA/WYVIXK5 and WYV5 are constructed the same except for the following:

Mark	No.	Symbol and Description	PDP-427XD /WYVIXK5	PDP-4270XD /WYVIXK5	PDP-4270XA /WYVIXK5	PDP-427XA /WYVIXK5	PDP-4270XA /WYV5	PDP-427XA /WYV5
NSP	13	Name Label	AAL2804	AAL2801	AAL2803	AAL2806	AAL2802	AAL2805
	15	Bolt Caution Label	AAX3005	AAX3005	AAX3005	AAX3005	Not used	Not used
	15	Caution Label	Not used	Not used	Not used	Not used	AAX3117	AAX3117
	18	Terminal Label A	AAX3337	AAX3343	AAX3399	AAX3398	AAX3344	AAX3332
	19	Terminal Label C	AAX3339	AAX3340	AAX3340	AAX3339	AAX3340	AAX3339
	20	Terminal Label B	AAX3417	AAX3419	AAX3419	AAX3417	AAX3419	AAX3417
	21	Terminal Panel B	ANC2403	ANC2429	ANC2429	ANC2403	ANC2429	ANC2403
	26	Input Cover Label E	AAX3396	AAX3397	AAX3397	AAX3396	AAX3376	AAX3375

2.3 FRONT SECTION

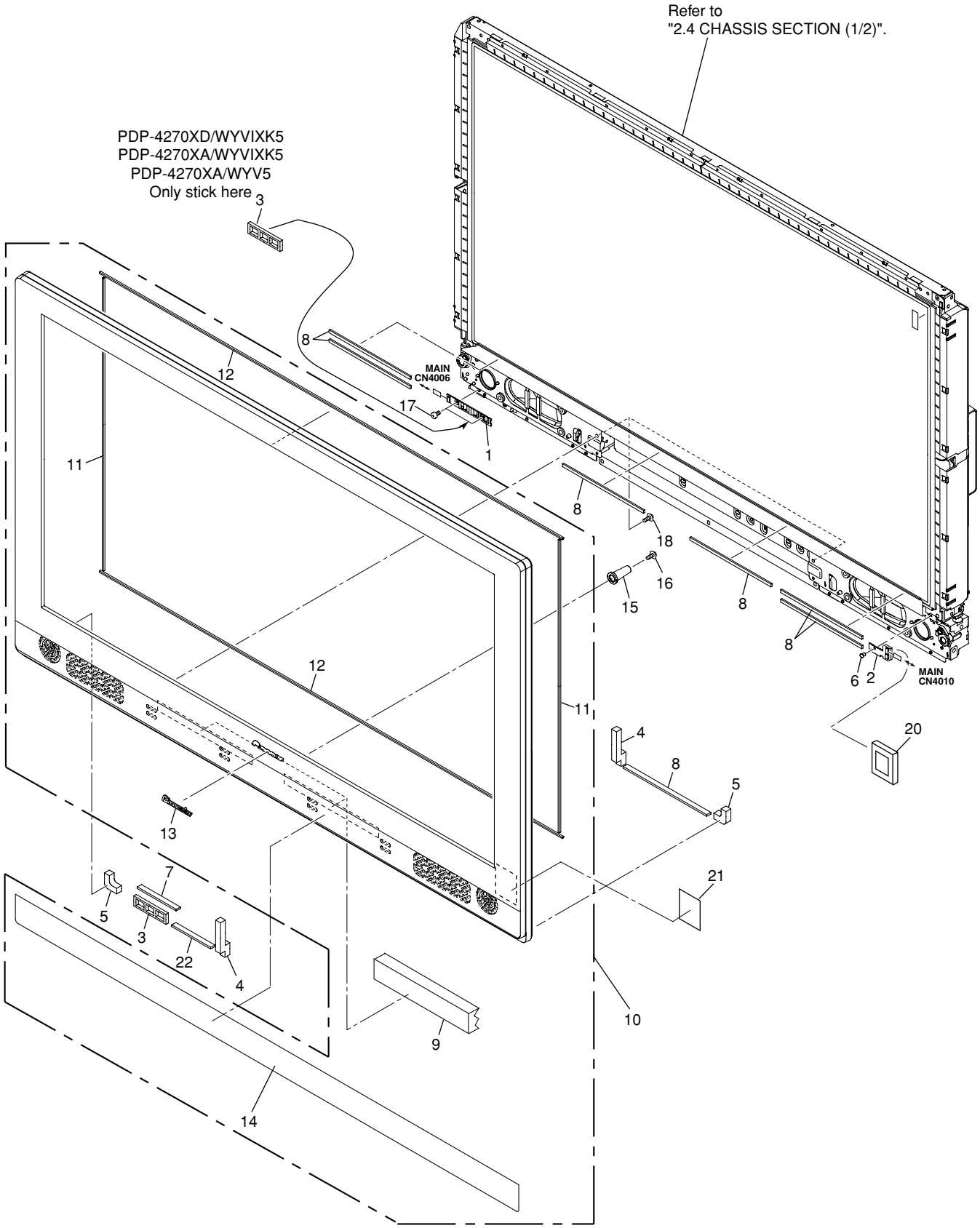

(1) FRONT SECTION PARTS LIST

Mark	No.	Description	Part No.
	1	42 & 60 LED Assy	AWW1134
	2	LED IR Assy	AWW1136
	3	Blind Cushion (427HX)	AEB1443
	4	Speaker Cushion	AEB1452
	5	Speaker Cushion S	See Contrast table (2)
	6	Nyron Rivet	AEC1671
	7	Insulation Sheet B	AED1284
	8	Insulation Sheet	See Contrast table (2)
	9	Reinforcement Frame	AMR3620
	10	Front Case Assy	See Contrast table (2)
	11	Panel Cushion V (42)	AED1301
	12	Panel Cushion H (42)	AED1309
	13	Pioneer Name Plate	AAM1096
	14	Punching Sheet	See Contrast table (2)
	15	Front Collar	AMR3541
	16	Screw (3 x 30P)	ABA1350
	17	Screw (M3 x 4)	ABA1354
	18	Screw	APZ30P080FTB
	19	Front Case Cushion	See Contrast table (2)
	20	IR Block Cushion	AEB1465
	21	IR Blind Sheet	AAX3455
	22	Insulation Sheet B	See Contrast table (2)

(2) CONTRAST TABLE

PDP-427XD/WYVIXK5, PDP-4270XD/WYVIXK5, PDP-4270XA/WYVIXK5, WYV5, PDP-427XA/WYVIXK5 and WYV5 are constructed the same except for the following:

Mark	No.	Symbol and Description	PDP-427XD /WYVIXK5	PDP-4270XD /WYVIXK5	PDP-4270XA /WYVIXK5	PDP-427XA /WYVIXK5	PDP-4270XA /WYV5	PDP-427XA /WYV5
	5	Speaker Cushion S	AEB1460	Not used	Not used	AEB1460	Not used	AEB1460
	8	Insulation Sheet	AED1289	Not used	Not used	AED1289	Not used	AED1289
	10	Front Case Assy	AMB2968	AMB2971	AMB2972	AMB2969	AMB2972	AMB2969
	14	Punching Sheet	AAS1014	AAS1015	AAS1015	AAS1014	AAS1015	AAS1014
	19	Front Case Cushion (42B)	AEB1462	AEB1464	AEB1464	AEB1462	AEB1464	AEB1462
	22	Insulation Sheet B	AED1284	Not used	Not used	AED1284	Not used	AED1284

2.4 CHASSIS SECTION (1/2)

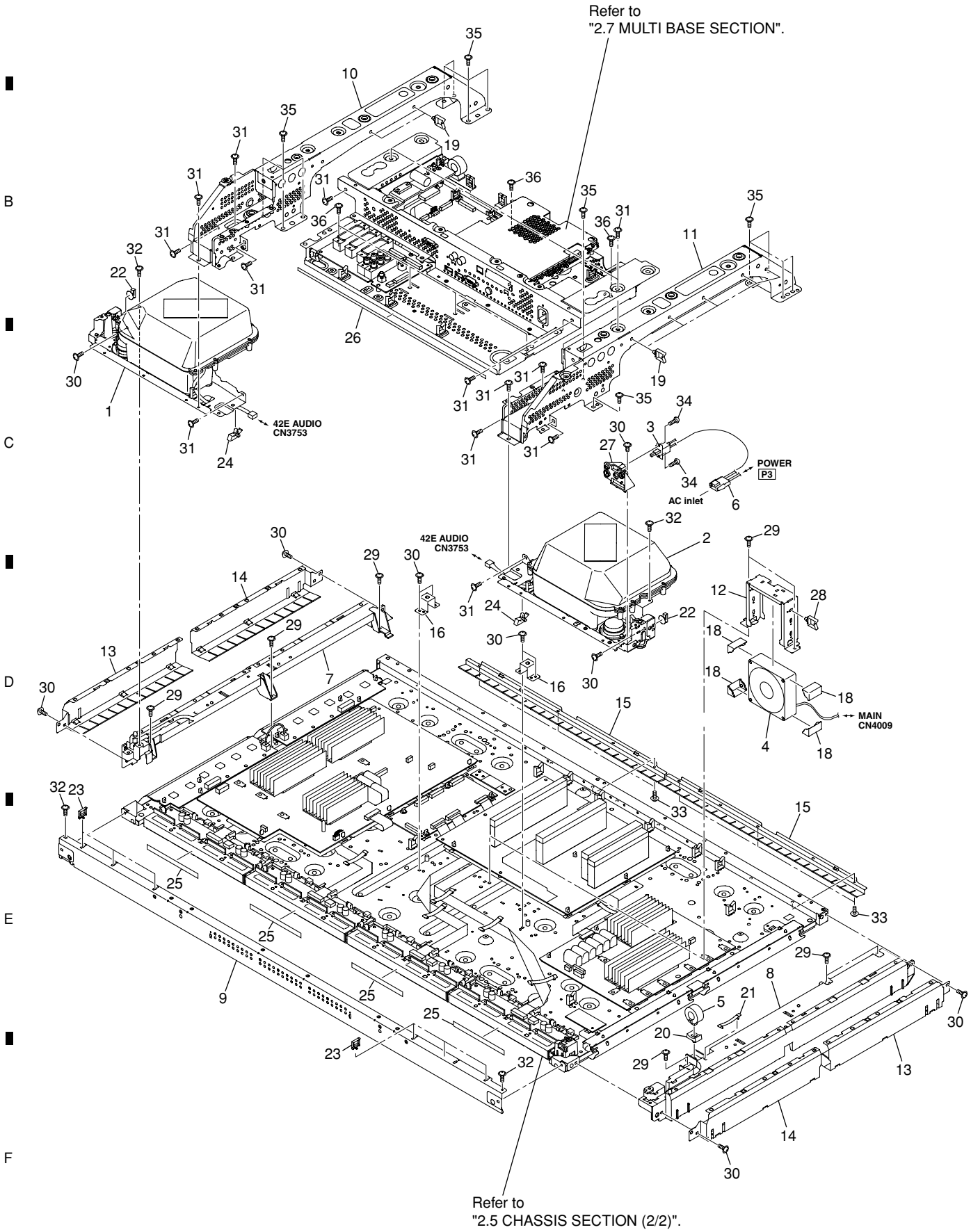

CHASSIS SECTION (1/2) PARTS LIST

Mark	No.	Description	Part No.
	1	Speaker Box Assy L	AMW1010
	2	Speaker Box Assy R	AMW1011
⚠	3	Power Switch (S1)	ASG1092
⚠	4	Fan Motor 80 x 25L	AXM1059
	5	Ferrite Core	ATX1044
	6	Housing Wire (42, 50)(J103)	ADX3320
	7	Front Chassis VL (427)	AMA1020
	8	Front Chassis VR (427)	AMA1021
	9	Front Chassis H Assy (427)	ANA2047
	10	Sub Frame Assy L (427)	ANA1943
	11	Sub Frame Assy R (427)	ANA1944
	12	Fan Holder	ANG2833
	13	Panel Holder V1 (427)	ANG2920
	14	Panel Holder V2 (427)	ANG2921
	15	Panel Holder H (427)	ANG2922
	16	Multi Base Holder	ANG2937
	17	• • • • •	
	18	Floating Rubber 80	AEB1427
	19	Wire Saddle	AEC1745
	20	Ferrite Core Holder	AEC1818
	21	Flat Clamp	AEC1879
	22	Locking Wire Saddle	AEC1948
	23	Mini Clamp	AEC2090
	24	Re-use Wire Saddle	AEC2091
	25	Address Gasket (42)	ANK1877
⚠	26	Gasket D	ANK1840
	27	Switch Holder	AMR3540
	28	Re-use Wire Saddle	AEC1945
	29	Screw	ABA1351
	30	Screw	ABZ30P080FTC
	31	Screw	AMZ30P060FTB
	32	Screw	APZ30P080FTB
	33	Screw	BBZ30P060FTC
	34	Screw	BPZ30P080FTB
	35	Screw	TBZ40P080FTB
	36	Screw	ABA1364

2.5 CHASSIS SECTION (2/2)

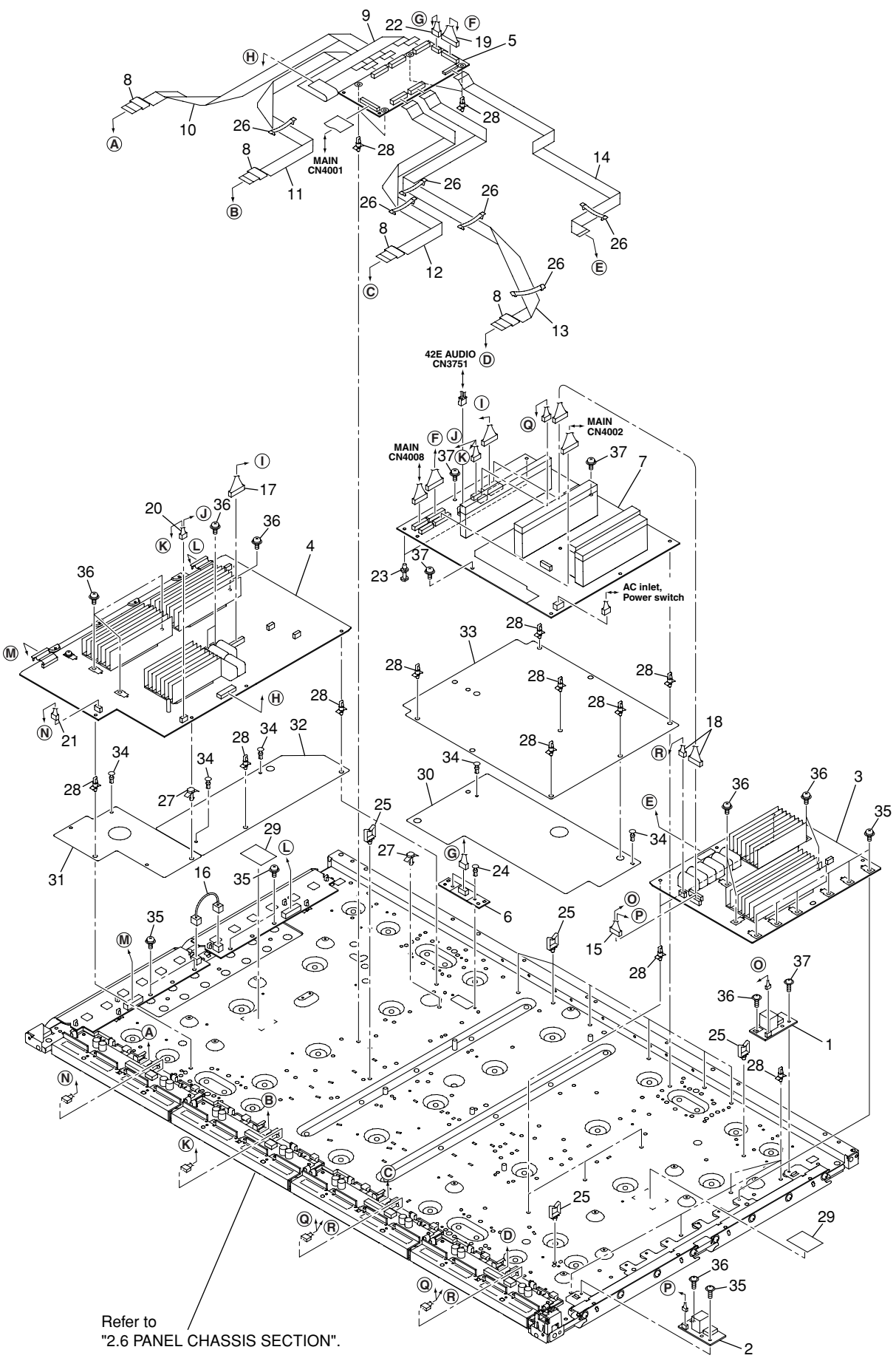

CHASSIS SECTION (2/2) PARTS LIST

Mark	No.	Description	Part No.
	1	SUS CLAMP 1 Assy	AWW1022
	2	SUS CLAMP 2 Assy	AWW1023
	3	42 X DRIVE Assy	AWW1196
	4	42 Y DRIVE Assy	AWV2400
	5	42 DIGITAL Assy	AWW1240
	6	SENSOR Assy	AWW1140
⚠	7	POWER SUPPLY Unit	AXY1153
	8	Ferrite Core	ATX1048
	9	Flexible Cable (J201)	ADD1429
	10	Flexible Cable (J202)	ADD1430
	11	Flexible Cable (J203)	ADD1431
	12	Flexible Cable (J204)	ADD1432
	13	Flexible Cable (J205)	ADD1433
	14	Flexible Cable (J206)	ADD1434
	15	6P Housing Wire (J118)	ADX3118
	16	3P Housing Wire (J119)	ADX3122
	17	9P Housing Wire (J101)	ADX3318
	18	8P&5/4P Housing Wire (J102)	ADX3319
	19	14P Housing Wire (J105)	ADX3323
	20	6P/4P Housing Wire (J108)	ADX3326
	21	4P Housing Wire (J109)	ADX3327
	22	5P Housing Wire (J110)	ADX3328
	23	Spacer	AEC1065
	24	Nyron Rivet	AEC1671
	25	Wire Saddle	AEC1745
	26	Flat Clamp	AEC1879
	27	PCB Support	AEC1938
	28	Re-use PCB Spacer	AEC2087
	29	Drive Silicone Sheet	AEH1095
	30	Power Supply Sheet B (507)	AMR3555
	31	Y Drive Protection Sheet A	AMR3632
	32	Y Drive Protection Sheet B	AMR3633
	33	Power Supply Sheet (427) A	AMR3648
	34	Rivet A	BEC1158
	35	Screw	ABA1364
	36	Screw	ABA1351
	37	Screw	ABA1368

2.6 PANEL CHASSIS SECTION

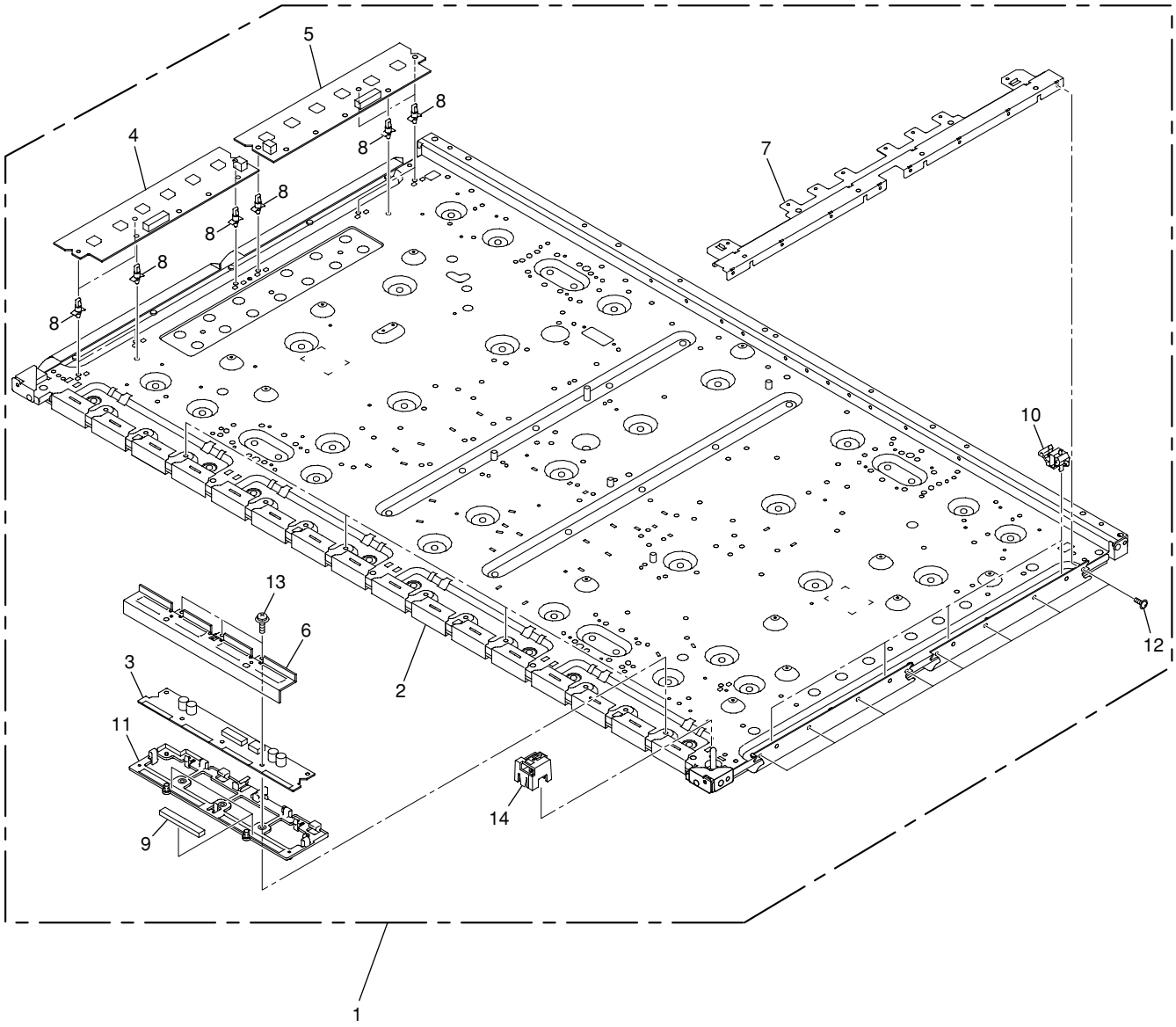

(1) PANEL CHASSIS SECTION PARTS LIST

Mark	No.	Description	Part No.
NSP	1	Panel Chassis (427S) Assy	See Contrast table (2)
NSP	2	Plasma Panel (42DC) Assy	AWU1161
NSP	3	42 ADDRESS Assy	AWV2335
NSP	4	42 SCAN A Assy	AWW1182
NSP	5	42 SCAN B Assy	AWW1183
	6	Address Heatsink	ANH1644
	7	Conductive Plate X	ANG2791
	8	Re-use PCB Spacer	AEC2087
	9	Address Silicone A	AEH1093
	10	Conductive Plate Holder	AMR3446
	11	Address Holder Assy	AMR3460
	12	Screw	ABA1364
	13	Screw	BBB30P120FNI
	14	Tube Cover (FT)	AMR3557

(2) CONTRAST TABLE

PDP-427XD/WYVIXK5, PDP-4270XD/WYVIXK5, PDP-4270XA/WYVIXK5, WYV5, PDP-427XA/WYVIXK5 and WYV5 are constructed the same except for the following:

Mark	No.	Symbol and Description	PDP-427XD /WYVIXK5	PDP-4270XD /WYVIXK5	PDP-4270XA /WYVIXK5	PDP-427XA /WYVIXK5	PDP-4270XA /WYV5	PDP-427XA /WYV5
NSP	1	Panel Chassis (427S) Assy	AWU1185	AWU1185	AWU1185	AWU1185	AWU1207	AWU1207

2.7 MULTI BASE SECTION

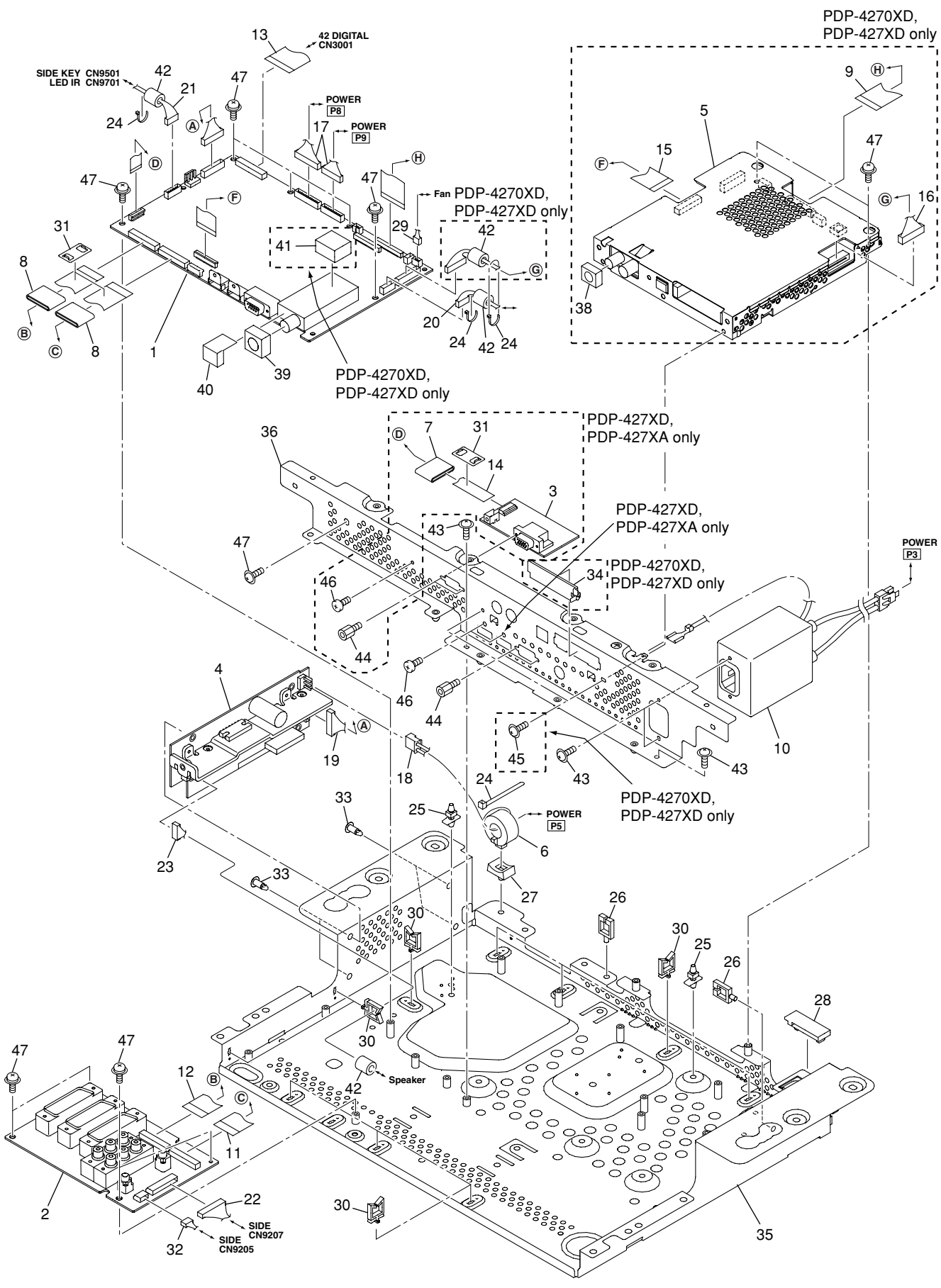

(1) MULTI BASE SECTION PARTS LIST

Mark	No.	Description	Part No.
	1	MAIN Assy	See Contrast table (2)
	2	TANSHI Assy	See Contrast table (2)
	3	PC Assy	See Contrast table (2)
	4	42E AUDIO Assy	AWW1185
	5	R07 DT Assy	See Contrast table (2)
	6	Ferrite Core	ATX1044
	7	Ferrite Core	See Contrast table (2)
	8	Ferrite Core	ATX1064
	9	Flexible Cable (J214)	See Contrast table (2)
⚠	10	AC Inlet (CN1)	AKP1301
	11	Flexible Cable (J210)	ADD1441
	12	Flexible Cable (J211)	ADD1441
	13	Flexible Cable (J207)	ADD1445
	14	Flexible Cable (J213)	See Contrast table (2)
	15	Flexible Cable (J215)	See Contrast table (2)
	16	12P Housing Wire (J126)	See Contrast table (2)
	17	13P&11P Housing Wire (J106)	ADX3324
	18	3P Housing Wire (J107)	ADX3325
	19	11P Housing Wire (J111)	ADX3329
	20	6P Housing Wire (J113)	ADX3331
	21	7/6/4P Housing Wire (J114)	ADX3332
	22	14P Housing Wire (J116)	ADX3334
	23	8/4P Housing Wire (J117)	ADX3336
	24	Binder	AEC-093
	25	Locking Card Spacer	AEC1429
	26	Wire Saddle	AEC1745
	27	Ferrite Core Holder	AEC1818
	28	Clamp	AEC1884
	29	3P Housing Wire (J127)	ADX3421
	30	Re-use Wire Saddle	AEC1945
	31	Ferrite Stopper	AEC1981
	32	5P Housing Wire (J125)	ADX3388
	33	Locking Card Spacer	AEC2019
	34	POD Cover	See Contrast table (2)
	35	Multi Base Assy	See Contrast table (2)
	36	Terminal Panel A	See Contrast table (2)
	37	• • • • •	
⚠	38	Gasket N	See Contrast table (2)
⚠	39	Gasket EA	ANK1855
⚠	40	Gasket EB	ANK1899
⚠	41	Gasket ED	See Contrast table (2)
	42	Filter	CTX1054
	43	Screw	AMZ30P060FTB
	44	Hex. Head Screw	BBA1051
	45	Screw	See Contrast table (2)
	46	Screw	BMZ30P060FTB
	47	Screw	PMB30P080FNI

(2) CONTRAST TABLE

PDP-427XD/WYVIXK5, PDP-4270XD/WYVIXK5, PDP-4270XA/WYVIXK5, WYV5, PDP-427XA/WYVIXK5 and WYV5 are constructed the same except for the following:

Mark	No.	Symbol and Description	PDP-427XD /WYVIXK5	PDP-4270XD /WYVIXK5	PDP-4270XA /WYVIXK5	PDP-427XA /WYVIXK5	PDP-4270XA /WYV5	PDP-427XA /WYV5
	1	MAIN Assy	AWV2318	AWV2320	AWV2320	AWV2318	AWV2320	AWV2318
	2	TANSHI Assy	AWW1161	AWW1178	AWW1178	AWW1161	AWW1178	AWW1161
	3	PC Assy	AWW1163	Not used	Not used	AWW1163	Not used	AWW1163
	5	R07 DT Assy	AWE1311	AWE1311	Not used	Not used	Not used	Not used
	7	Ferrite Core	ATX1063	Not used	Not used	ATX1063	Not used	ATX1063
	9	Flexible Cable (J214)	ADD1450	ADD1450	Not used	Not used	Not used	Not used
	14	Flexible Cable (J213)	ADD1452	Not used	Not used	ADD1452	Not used	ADD1444
	15	Flexible Cable (J215)	ADD1451	ADD1451	Not used	Not used	Not used	Not used
	16	12P Housing Wire (J126)	ADX3390	ADX3390	Not used	Not used	Not used	Not used
	34	POD Cover	AMR3542	AMR3542	Not used	Not used	Not used	Not used
	35	Multi Base Assy	ANA1952	ANA1952	ANA2019	ANA2019	ANA2019	ANA2019
	36	Terminal Panel A	ANC2398	ANC2400	ANC2415	ANC2399	ANC2415	ANC2399
⚠	38	Gasket N	ANK1776	ANK1776	Not used	Not used	Not used	Not used
⚠	41	Gasket ED	ANK1863	ANK1863	Not used	Not used	Not used	Not used
	45	Screw	BBZ30P060FTB	BBZ30P060FTB	Not used	Not used	Not used	Not used

2.8 PDP SERVICE PANEL ASSY 427 (AWU1208)

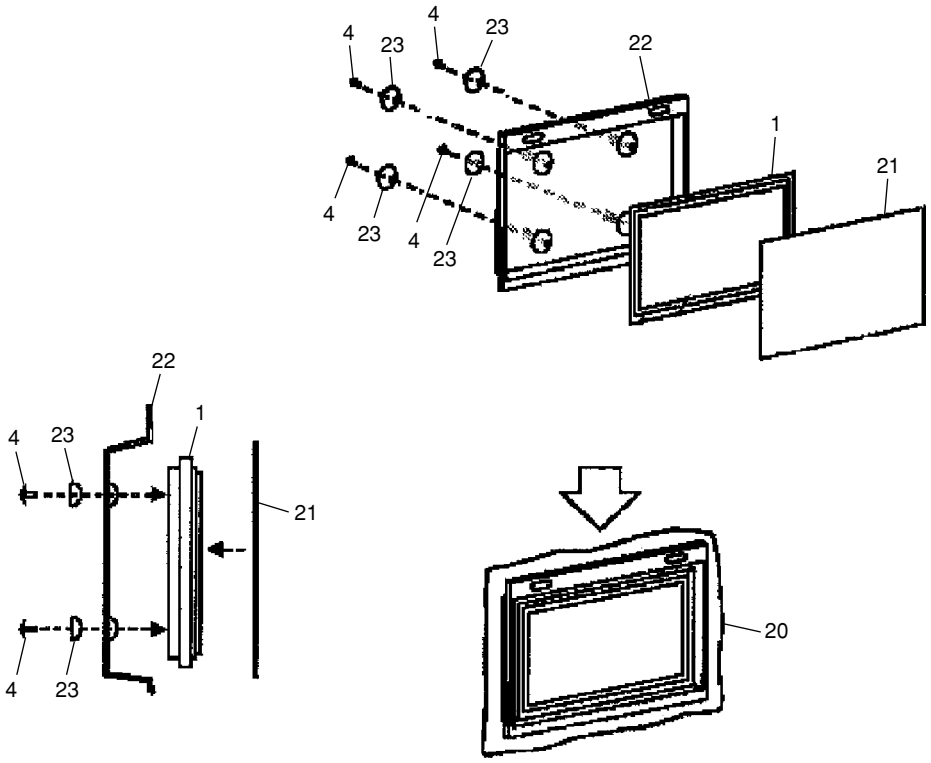

PDP SERVICE PANEL ASSY 427 (AWU1208) PARTS LIST

Mark	No.	Description	Part No.
NSP	1	Panel Chassis (427) Assy	AWU1171
	2	Caution Label	AAX3031
NSP	3	Drive Voltage Label	ARW1097
	4	Screw	PMB50P150FTC
	5	Screw	ABA1351
	6	Wire Saddle	AEC1745
	7	PCB Support	AEC1938
	8	Vinyl Bag S	AHG1338
NSP	9	Vinyl Bag	AHG1340
	10	Y Drive Protection Sheet A	AMR3632
	11	Power Sheet (427) A	AMR3648
	12	Address Gasket (42)	ANK1877
	13	Rivet A	BEC1158
	14	Pad 42SINGLE(T-L)	AHA2550
	15	Pad 42SINGLE(T-R)	AHA2551
	16	Pad 42SINGLE(B-L)	AHA2552
	17	Pad 42SINGLE(B-R)	AHA2553
	18	Upper Carton (42SINGLE)	AHD3480
	19	Under Carton (42SINGLE)	AHD3481
	20	Polyethylene Bag	AHG1381
	21	Packing Sheet	AHG1386
	22	Tray (FT)	AHX1158
	23	Cup Spacer (15)	ANG2936

2.9 TABLE TOP STAND (PDP-4270XD and PDP-4270XA ONLY)

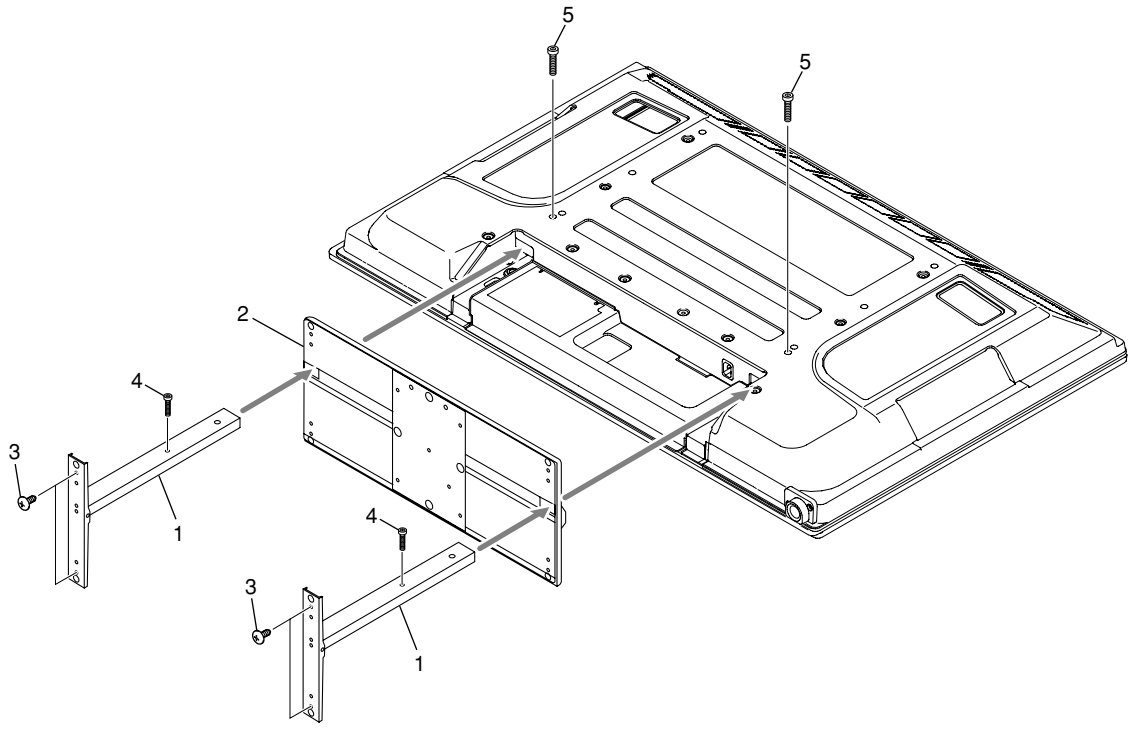

TABLE TOP STAND PARTS LIST

Mark	No.	Description	Part No.
	1	Stand Pipe Assy	See Contrast table (2)
	2	Base Cover Assy	See Contrast table (2)
	3	Screw	ABA1357
	4	Screw (HEX)	SMZ80H300FTC
	5	Screw (HEX)	ABA1365

(2) CONTRAST TABLE

PDP-4270XD/WYVIXK5, PDP-4270XA/WYVIXK5 and PDP-4270XA/WYV5 are constructed the same except for the following:

Mark	No.	Symbol and Description	PDP-4270XD /WYVIXK5	PDP-4270XA /WYVIXK5	PDP-4270XA /WYV5
	1	Stand Pipe Assy	AXY1158	AXY1158	AXY1144
	2	Base Cover Assy	AXY1161	AXY1161	AXY1143

3. PCB PARTS LIST

NOTES:
- *Parts marked by "NSP" are generally unavailable because they are not in our Master Spare Parts List.*
- *The ⚠ mark found on some component parts indicates the importance of the safety factor of the part. Therefore, when replacing, be sure to use parts of identical designation.*
- *When ordering resistors, first convert resistance values into code form as shown in the following examples.*

Ex.1 When there are 2 effective digits (any digit apart from 0), such as 560 ohm and 47k ohm (tolerance is shown by J=5%, and K=10%).

560 Ω → 56 x 10[1] → 561 ..... RD1/4PU[5][6][1]J
47k Ω → 47 x 10[3] → 473 ..... RD1/4PU[4][7][3]J
0.5 Ω → R50 ..... RN2H[R][5][0]K
1 Ω → 1R0 ..... RS1P[1][R][0]K

Ex.2 When there are 3 effective digits (such as in high precision metal film resistors).

5.62k Ω → 562 x 10[1] → 5621 ..... RN1/4PC[5][6][2][1]F

■ LIST OF WHOLE PCB ASSEMBLIES

Mark	Symbol and Description	PDP-427XD /WYVIXK5	PDP-4270XD /WYVIXK5	PDP-4270XA /WYVIXK5	PDP-427XA /WYVIXK5	PDP-4270XA /WYV5	PDP-427XA /WYV5
	1..R07 DT ASSY	AWE1311	AWE1311	Not used	Not used	Not used	Not used
	1..MAIN ASSY	AWV2318	AWV2320	AWV2320	AWV2318	AWV2320	AWV2318
NSP	1..IO ASSY	AWV2319	AWV2321	AWV2321	AWV2319	AWV2321	AWV2319
	2..TANSHI ASSY	AWW1178	AWW1161	AWW1161	AWW1178	AWW1161	AWW1161
	2..SIDE ASSY	AWW1162	AWW1162	AWW1162	AWW1162	AWW1162	AWW1162
	2..PC ASSY	AWW1163	Not used	Not used	AWW1163	Not used	AWW1163
NSP	1..42E AUDIO ASSY	AWV2369	AWV2369	AWV2369	AWV2369	AWV2369	AWV2369
	2..SIDE KEY ASSY	AWW1133	AWW1133	AWW1133	AWW1133	AWW1133	AWW1133
	2..42 & 60 LED ASSY	AWW1134	AWW1134	AWW1134	AWW1134	AWW1134	AWW1134
	2..LED IR ASSY	AWW1136	AWW1136	AWW1136	AWW1136	AWW1136	AWW1136
	2..42E AUDIO ASSY	AWW1185	AWW1185	AWW1185	AWW1185	AWW1185	AWW1185
NSP	1..42 X DRIVE ASSY	AWV2399	AWV2399	AWV2399	AWV2399	AWV2399	AWV2399
	2..SUS CLAMP 1 ASSY	AWW1022	AWW1022	AWW1022	AWW1022	AWW1022	AWW1022
	2..SUS CLAMP 2 ASSY	AWW1023	AWW1023	AWW1023	AWW1023	AWW1023	AWW1023
	2..42 X DRIVE ASSY	AWW1196	AWW1196	AWW1196	AWW1196	AWW1196	AWW1196
	1..42 Y DRIVE ASSY	AWV2400	AWV2400	AWV2400	AWV2400	AWV2400	AWV2400
NSP	1..42 DIGITAL ASSY	AWV2435	AWV2435	AWV2435	AWV2435	AWV2435	AWV2435
	2..SENSOR ASSY	AWW1140	AWW1140	AWW1140	AWW1140	AWW1140	AWW1140
	2..42 DIGITAL ASSY	AWW1240	AWW1240	AWW1240	AWW1240	AWW1240	AWW1240
NSP	1..PANEL CHASSIS (427S) ASSY	AWU1185	AWU1185	AWU1185	AWU1185	AWU1185	AWU1185
NSP	2..42 ADDRESS ASSY	AWV2335	AWV2335	AWV2335	AWV2335	AWV2335	AWV2335
NSP	2..42 SCAN ASSY	AWV2362	AWV2362	AWV2362	AWV2362	AWV2362	AWV2362
NSP	3..42 SCAN A ASSY	AWW1182	AWW1182	AWW1182	AWW1182	AWW1182	AWW1182
NSP	3..42 SCAN B ASSY	AWW1183	AWW1183	AWW1183	AWW1183	AWW1183	AWW1183
⚠	1..POWER SUPPLY UNIT	AXY1153	AXY1153	AXY1153	AXY1153	AXY1153	AXY1153

■ CONTRAST OF PCB ASSEMBLIES

MAIN ASSY

AWV2320 and AWV2318 are constructed the same except for the following :

Mark	Symbol and Description	AWV2320	AWV2318
	IC5103	Not used	TVP5150AM1PBS-K
	IC5404	Not used	BR24L02FJ
	IC8305	Not used	TC74VHC00FTS1
	Q5402	Not used	HN1K02FU
	Q5408	Not used	UMD2N
	Q5414	Not used	RN1902
	Q8302	Not used	2SA1586
	Q8303, Q8304	Not used	DTC124EUA
	Q8311	Not used	2SJ461A
	D5402	Not used	1SS301
	D5408	Not used	UDZS6R8(B)
	D8301 - D8303	Not used	1SS355
	C4922, C4932, C4933, C5101, C5102, C5103	Not used	CKSRYB105K10
	C5104, C5105	Not used	CCSSCH100D50
	C5117, C5123, C5125, C5126, C5449 - C5451	Not used	CKSSYF104Z16
	C5121, C5122, C5124, C8320	Not used	CKSSYB104K10
	C5452, C8319	Not used	DCH1201
	C5453	Not used	CCSSCH101J50
	R4031	Not used	RS1/16S0R0J
	R4056, R8344	Not used	RS1/16SS0R0J
	R4057	RS1/16SS0R0J	Not used
	R4728, R4729, R4904, R4905, R4910	Not used	RS1/16SS220J
	R4809, R4810	Not used	RS1/16SS562J
	R4964, R4965, R4966	Not used	RS1/16S75R0F
	R5103	Not used	ACN1246
	R5121, R8347, R8359	Not used	RS1/16SS332J
	R5122, R5419, R8476	Not used	RS1/16SS103J
	R5124, R5125, R5126	Not used	RS1/16SS470J
	R5147	Not used	RAB4CQ220J
	R5421, R8364	Not used	RS1/16SS101J
	R5422	Not used	RS1/16SS473J
	R5423, R5424	Not used	RS1/16SS100J
	R5433, R8353	Not used	RS1/16SS102J
	R8354	Not used	RS1/16SS122J
	R8355	Not used	RS1/16SS104J
	R8356, R8358	Not used	RS1/16S122J
	R8357	Not used	RS1/16S220J
	R8376	RS1/10S0R0J	Not used
	R8379, R8380	RS1/16SS223J	Not used
	R8477, R8480	RS1/16SS103J	Not used
	X5101 CRYSTAL	Not used	ASS1189
	CN4018 12P FFC CONNECTOR	Not used	AKM1233
	JA5402 HDMI CONNECTOR	Not used	AKP1278

TANSHI ASSY

AWW1178 and AWW1161 are constructed the same except for the following :

Mark	Symbol and Description	AWW1178	AWW1161
	Q9012	Not used	HN1A01FU
	Q9015	Not used	2SC4116
	Q9016	Not used	2SD2114K
⚠	F9001 - F9007	Not used	CTF1557
	C9037	Not used	CCG1205
	C9022, C9025	Not used	CKSRYB105K10
⚠	C9010 - C9012	Not used	CKSSYB471K50
	C9023, C9026	Not used	CKSRYB102K50
	C9043	Not used	CKSRYB224K10
	JA9005 2P PINJACK	AKB1331	AKB1340
	JA9002	Not used	VKN1449
	JA9004	Not used	AKN1081

■ PCB PARTS LIST FOR PDP-427XD/WYVIXK5 UNLESS OTHER WISE NOTED

Mark	No.	Description	Part No.

R07 DT ASSY

MISCELLANEOUS

	9 TOP CAN	XNG1002
	11 PCMCIA EJECTOR	ANG2673
	12-15 SCREW	PMZ20P100FNI
	16-18 SCREW	ABZ30P060FTC

[TUNER BLOCK]

SEMICONDUCTORS

	IC1000	UPC3221GV
	IC1001	STV0361L
	Q1001	2SC2412K
	Q1002	DTC124EUA
	Q1003,1004	RK7002
⚠	D1000	SM15T6V8A
	D1001	1SS355

MISCELLANEOUS

	L1000	XTX1005
	L1002	LCYAR82J2520
	L1004	XTX1003
	L1200	XTX1001
	F1000	XTF1002
	F1001,1003-1010	VTF1091
	F1012-1014,1100,1101	VTF1091
	F1202-1204	VTF1091
	X1100 CRYSTAL (27 MHz)	XSS1010
⚠	FU1200 CHIP FUSE (0.25A)	XEK1003
⚠	M1000 FRONT END	XXF1007

CAPACITORS

	C1001-1003,1017,1022	CKSRYB104K16
	C1004,1055	CEHVKW101M6R3
	C1010	CEHVKW2R2M50
	C1013,1021,1040,1041	CKSRYB103K50
	C1015	CKSRYB102K50
	C1018,1027,1029,1050	CEHVKW470M16
	C1019	CEHVKW100M50
	C1020	CEHVKW100M16
	C1025,1026,1030-1035	CKSRYB104K16
	C1028,1038,1042,1046	CCG1205
	C1036	CKSRYB105K10
	C1037,1039,1049,1053	CKSRYB104K16
	C1043,1044	CCSRCJ3R0C50
	C1045	CKSRYB103K50
	C1051	CCG1205
	C1054	BCG1050
	C1056,1057	CEHVKW470M16
	C1058-1062	CKSRYB104K16
	C1102	CEHVKW331M6R3

RESISTORS

	All Resistors	RS1/16S###J

[DEMUX BLOCK]

SEMICONDUCTORS

	IC2000	STI5517DWAL
	IC2001	SN74LVU04APW
	IC2002	TC74VHC08FTS1
	Q2000	2SC4081
	D2000	DA204U
	D2001	UDZS8R2(B)
	D2002	HVU307
	D2005,2009	RB501V-40

MISCELLANEOUS

	L2000	XTX1003
	F2000-2003	VTF1091
	X2000 CRYSTAL RESONATOR (27 MHz)	BSS1112
	X2001 CRYSTAL OSCILLATOR	ASS1172
	VA2002 VARISTOR	AVR-M1608C120MT2AB

RESISTORS

	R2010,2018,2042	RAB4C103J
	R2070,2071	RAB4CQ220J
	Other Resistors	RS1/16S###J

Mark No.	Description	Part No.
	CAPACITORS	
	C2000,2026,2030	CCSRCH101J50
	C2001	CKSRYB471K50
	C2002,2003,2005,2006	CKSRYF104Z16
	C2004	CKSRYF474Z16
	C2007	CCSRCH471J50
	C2008,2017,2020,2021	CKSRYB102K50
	C2009	CCSRCH330J50
	C2011,2012	CCSRCH390J50
	C2013	CKSRYB105K10
	C2014,2016	CCSRCH100D50
	C2015	CKSRYF105Z10
	C2018,2019,2022-2025	CKSRYF104Z16
	C2027,2029,2042,2046	CKSRYF223Z50
	C2028,2035,2037-2041	CKSRYF104Z16
	C2032-2034,2036	CEHVKW470M16
	C2043-2045,2047,2048	CKSRYF104Z16
	[MEMORY BLOCK]	
	SEMICONDUCTORS	
	IC3000,3003	K4S281632I-UC75
	IC3002	XGC1003
	MISCELLANEOUS	
	L3003	XTX1003
	L3005	XTX1001
	RESISTORS	
	R3004-3014	RAB4CQ470J
	Other Resistors	RS1/16S###J
	CAPACITORS	
	C3000,3003,3007,3008	CKSRYF104Z16
	C3001,3002,3004,3014	CKSRYF223Z50
	C3010	CEHVKW470M16
	C3012,3017,3020-3022	CKSRYF104Z16
	C3015,3018,3019,3023	CKSRYF223Z50
	C3024	CKSRYF223Z50
	[AV BLOCK]	
	SEMICONDUCTORS	
	IC4000	CS4334-KS
	IC4001	SN74LVU04APW
	IC4002	RC4558D
	IC4003	CS8406CZZ
	IC4100	PCM1803DB
	Q4001,4002	2SC4081
	MISCELLANEOUS	
	F4000,4100 FERRITE CORE	VTF1091
	JA4000 OPTICAL OUT MOD.	GP1FM513TZ
	X4000 CRYSTAL (12.288 MHz)	XSS1006
	CN4000 40P CONNECTOR	AKM1348
	RESISTORS	
	R4042,4045,4046	RS1/16S2000F
	Other Resistors	RS1/16S###J

Mark No.	Description	Part No.
	CAPACITORS	
	C4000,4002	CCG1205
	C4001,4014,4032,4033	CKSRYB103K50
	C4003,4005,4017,4018	CKSRYF104Z16
	C4004	CEHVKW2R2M50
	C4006	CKSRYB102K50
	C4007,4013	CCSRCH220J50
	C4008,4009	CCSRCH121J50
	C4010,4011,4042	CCSRCH101J50
	C4012,4022,4023,4029	CEHVKW470M16
	C4019,4102-4104	CEHVKW100M16
	C4021,4024,4043	CKSRYF104Z16
	C4038	CKSRYB103K50
	C4039	CEHVKW470M16
	C4040,4041	CKSRYB105K10
	C4105-4107	CKSRYF104Z16
	C4108-4113	CEHVKW100M16
	[CI BLOCK]	
	SEMICONDUCTORS	
	IC5000	ST890CDR
	IC5001	CIMAXSP2L
	IC5002	TC74LCX245FTS1
	IC5003,5004	TC74LCX373FT
	Q5000	2SC4081
	Q5001	DTA143EUA
	Q5002	DTC124EUA
	MISCELLANEOUS	
	CN5000 PCMCIA CONNECTOR	XKP1003
	RESISTORS	
	R5014,5019,5022,5024	RAB4CQ470J
	R5030,5032,5036-5038	RAB4CQ470J
	R5045-5050	RAB4CQ470J
	Other Resistors	RS1/16S###J
	CAPACITORS	
	C5001	CKSRYB105K10
	C5003,5004,5006	CKSRYF104Z16
	C5005,5100	CEHVKW470M16
	C5008-5013	CKSRYF104Z16
	[POWER BLOCK]	
	SEMICONDUCTORS	
	IC6001	M5291FP
	IC6002	BA05FP
	IC6003	FPF2003
	IC6200	TC74LCX245FTS1
	IC6300	SN74LVC1G08DCK
	Q6001,6009,6011,6200	DTC124EUA
	Q6003,6005,6010	DTA143EUA
	Q6006	2SB1188
	Q6008	TPC8209
	Q6100	2SC4081
	D6001	RSX201L-30
	D6003,6100-6102	1SS355
	D6103	UDZS30(B)

Mark No.	Description	Part No.
	MISCELLANEOUS	
	L6000	LCYAR82J2520
A	L6001,6100,6101	XTH1001
	F6000 FERRITE CORE	VTF1091
	CN6000 12P CONNECTOR	AKM1298
	CN6003 50P CONNECTOR	AKM1349
	RESISTORS	
	R6012-6014	RAB4C2R2J
	R6031	RAB4C221J
	R6204,6205	RAB4CQ101J
	Other Resistors	RS1/16S###J
	CAPACITORS	
B	C6000,6026,6104-6106	CEHVKW331M6R3
	C6001,6011,6013-6015	CEHVKW470M16
	C6002,6035	CKSRYF223Z50
	C6003,6005,6006,6012	CKSRYF104Z16
	C6004	CEHVKW100M50
	C6008,6016	CKSRYF474Z16
	C6010	CCSRCH331J50
	C6017,6028,6036,6042	CEHVKW101M6R3
	C6018,6020,6021,6025	CKSRYF104Z16
	C6019,6023,6100	CEHVKW470M16
	C6022	CKSRYB103K50
C	C6027	CCSRCH101J50
	C6029,6030,6033,6038	CKSRYF104Z16
	C6031	CEHVKW2R2M50
	C6044	CEHVKW101M6R3
	C6102	CCG1191
	C6200,6300	CKSRYF104Z16

MAIN ASSY

[BOARD IF BLOCK]

D

Mark No.	Description	Part No.
	SEMICONDUCTORS	
	IC4001-4005	TC74VCX541FT
	Q4001,4002,4005	DTC124EUA
	Q4003,4004	RN2902
	MISCELLANEOUS	
	L4001-4006	BTX1042
	⚠F4001-4010	CTF1557
	CN4001,4004,4005 50P CONNECTOR	AKM1349
	CN4006 PLUG(6P)	KM200NA6
	CN4013 50P CONNECTOR PBF	AKM1353
E		
	CN4014 40P CONNECTOR PBF	AKM1354
	RESISTORS	
	R4001	RAB4CQ470J
	R4021-4024	BCN1067
	R4030,4035	RS1/16S0R0J
	Other Resistors	RS1/16SS###J
	CAPACITORS	
	C4001-4003,4007,4009	CKSSYF104Z16
	C4004	CCSSCH101J50
	C4006,4036,4039	DCH1201
F	C4008	DCH1165
	C4014	CKSSYF104Z16
	C4033,4051	CKSRYF104Z50
	C4048-4050	CCSSCH470J50
	[REG 0 BLOCK]	
	SEMICONDUCTORS	
	IC4101,4114,4115	S-1132B18-U5
	IC4102	LTC3414EFE
	IC4103	LTC3412EFE
	IC4104,4111,4113	NJM2846DL3-05
	IC4105	S-1170B25UC-OTK
	IC4106	S-1170B15UC-OTA
	IC4107	NJM2846DL3-33
	IC4108	NJM2846DL3-18
	IC4109,4110	PQ090DNA1ZPH
	Q4101,4103	RN1902
	Q4102	HN1C01FU
	Q4104	DTC124EUA
	Q4105,4106	UPA1917TE
	Q4107-4109	2SC4116
	Q4110	2SD2114K
	D4101-4110,4112-4118	1SS355
	D4111,4119,4120,4122	1SS357
	D4121	1SS355
	MISCELLANEOUS	
	L4101,4103	BTX1042
	L4102,4105-4107	BTX1039
	L4108	ATH1208
	L4109	ATH1194
	F4101,4102	VTF1080
	RESISTORS	
	R4113,4134-4136,4140	RS1/10S0R0J
	R4119,4131,4146	RS1/16SS3003F
	R4120	RS1/16SS2003F
	R4123,4159	RS1/16SS1502F
	R4124	RS1/16SS6202F
	R4133	RS1/16SS1503F
	R4148,4164-4170,4173	RS1/10S0R0J
	Other Resistors	RS1/16SS###J
	CAPACITORS	
	C4018,4101,4103,4106	CKSRYB105K10
	C4102,4104,4105,4107	DCH1201
	C4108	CKSRYB105K10
	C4109,4111-4113,4116	DCH1201
	C4110,4117	CCSSCH101J50
	C4114,4118	BCG1050
	C4119,4127,4131,4134	DCH1201
	C4121,4140,4153	CKSSYB104K10
	C4122,4129	CCSSCH220J50
	C4123,4124,4126,4130	DCH1165
	C4132	ACH1421
	C4135,4138,4143-4146	DCH1201
	C4136,4137,4141,4142	BCG1059
	C4139	CCSRCH471J50
	C4147	CCSRCH102J50
	C4150	ACH1429
	C4151	CKSSYB102K50
	C4154	CKSSYF104Z16
	C4155	CKSSYB103K16
	C4165	DCH1201

Mark No.	Description	Part No.
[ATUNER BLOCK]		
SEMICONDUCTORS		
	IC4501	MSP3417G
	Q4501	DTC124EUA
	Q4503	UMD2N
	Q4504	HN1B04FU
	Q4505	2SC4116
	Q4506	2SA1586
	Q4508	HN1C01FU
	D4501	UDZS24(B)
	D4502,4505	UDZS8R2(B)
MISCELLANEOUS		
	L4501-4503	BTH1119
	F4501-4503	VTF1080
	X4501 CRYSTAL (18.432 MHz)	ASS1196
⚠	U4501 FRONT END (EU)	AXF1172
RESISTORS		
	R4517	RS1/16S330J
	R4522,4523	RS1/16S470J
	Other Resistors	RS1/16SS###J
CAPACITORS		
	C4501-4503	CKSRYF104Z50
	C4504	CKSRYB682K50
	C4505,4512	CCSSCH5R0D50
	C4506	CKSSYB103K16
	C4507,4508,4513,4514	CCSSCH100D50
	C4509,4515,4518	CKSSYB102K50
	C4511	CCSSCH560J50
	C4520	CEHVKW101M6R3
	C4521,4523,4525,4528	DCH1201
	C4527,4529,4536,4537	CKSSYF104Z16
	C4530,4532-4534,4538	DCH1201
	C4539,4543	CKSSYF104Z16
	C4541	DCH1201
[TEXT UCOM BLOCK]		
SEMICONDUCTORS		
	IC4601	SDA6000
	IC4602	HY57V641620ETP-H
	IC4603	AGC1020
	IC4606	TC74LCX125FT
	IC4607	TC7SH04FUS1
	Q4601,4602	UMD2N
	D4601	1SS355
	D4602	UDZS12(B)
	D4603	UDZS3R0(B)
	D4604	UDZS3R9(B)
MISCELLANEOUS		
	X4601 CRYSTAL	ASS1193
RESISTORS		
	R4601	ACN1251
	R4602-4606,4608,4625	BCN1067
	R4627,4650	RS1/16S0R0J
	R4640	RAB4CQ470J
	R4644,4646	RAB4CQ680J
	R4645,4647,4648	RAB4CQ103J
	R4649	RS1/10S0R0J
	Other Resistors	RS1/16SS###J
CAPACITORS		
	C4603,4612,4646,4650	DCH1201
	C4604	CKSSYB103K16
	C4605,4606	CCSSCH220J50
	C4607	CKSSYB102K50
	C4610,4611,4613,4615	CKSSYF104Z16
	C4617,4619,4621,4623	CKSSYF104Z16
	C4625,4627,4629,4631	CKSSYF104Z16
	C4633,4635,4636,4639	CKSSYF104Z16
	C4642,4644,4648,4651	CKSSYF104Z16
	C4647	CKSSYB104K10
	C4652,4655,4657,4659	CKSSYF104Z16
[AV SW BLOCK]		
SEMICONDUCTORS		
	IC4701	R2S11002AFT
	IC4702,4706	NJM12904V
	IC4703	PCM1803DB
	IC4704	NJU26901E2
	IC4705	PCM1754DBQ
	Q4701,4702,4721	UMD2N
	Q4703-4708,4715	2SA1586
	Q4711,4712,4716,4717	2SC4116
	Q4718	DTA124EUA
	Q4719,4720	2SC4116
	Q4722,4723	HN1B04FU
	D4701,4702,4704,4705	1SS301
	D4703	1SS355
MISCELLANEOUS		
	X4701 CRYSTAL	ASS1204
RESISTORS		
	R4736,4737	RS1/16S5600F
	R4739,4741	RS1/16S1800F
	R4794,4795,4851,4852	RS1/16S182J
	R4815-4817	RS1/10S0R0J
	R4849	RS1/16S472J
	R4853	RS1/16S222J
	R4860,4861,4863,4865	RS1/16S102J
	R4866	RAB4CQ470J
	Other Resistors	RS1/16SS###J
CAPACITORS		
	C4701,4723,4725,4731	CKSSYF104Z16
	C4702-4708,4710-4717	CKSRYB105K10
	C4718,4719	CCSRCH181J50
	C4720,4721	CCSRCH681J50
	C4722,4724,4726,4733	DCH1201
	C4727,4730	CKSSYB104K10
	C4728,4729	CKSRYB221K50
	C4732,4744,4751,4752	CKSSYF104Z16
	C4734,4749,4750,4757	DCH1201
	C4735,4736,4739-4742	CKSRYB105K10

Mark No.	Description	Part No.
	C4737	ACG1122
	C4745,4767,4768	DCH1165
A	C4753	ACH1394
	C4754,4755,4759,4760	CKSRYB105K10
	C4756,4761,4763,4764	CKSSYF104Z16
	C4758,4762,4765	DCH1201
	C4766,4772-4774	CKSSYF104Z16
	C4769-4771	DCH1201
	C4775,4776	CKSSYB681K50
	C4777,4779	CKSSYB152K50
	C4778	CCSSCH221J50
	C4780-4783	CKSRYB105K10
	C4784,4785	CCSRCH331J50
B		
	[RGB SW BLOCK]	
	SEMICONDUCTORS	
	IC4901	R2S11001FT
	Q4901-4903,4905	2SA1586
	Q4904,4906	HN1B04FU
	D4901-4903	UDZS4R7(B)
	RESISTORS	
	R4913-4918	RS1/16SS3301F
	R4919,4926,4930	RS1/16SS5600F
C	R4921,4928,4932	RS1/16SS75R0F
	R4925	RAB4CQ102J
	Other Resistors	RS1/16SS###J
	CAPACITORS	
	C4901-4903	CKSRYB105K10
	C4904	CCSRCH331J50
	C4905	CCSRCH680J50
	C4906-4910,4912-4915	CKSSYB103K16
	C4911,4935	CKSRYB474K10
	C4916,4923,4924,4926	CKSSYF104Z16
D	C4917-4921	CKSSYB103K16
	C4925,4927	DCH1201
	C4928-4931	CKSSYF104Z16
	[VDEC BLOCK]	
	SEMICONDUCTORS	
	IC5101	UPD64015AGM-UEU
	IC5102	EDS1616AGTA-75-E
	MISCELLANEOUS	
E	F5101 EMI FILTER	CCG1162
	X5102 CRYSTAL	ASS1191
	RESISTORS	
	R5101,5102,5104,5105	ACN1246
	R5106,5107	BCN1067
	R5108-5110	RS1/16S0R0J
	R5118-5120	RS1/16SS470J
	R5133-5135	RS1/16SS2000F
	R5136-5138	RS1/16SS220J
	R5140	RS1/16S334J
	R5148	RAB4CQ220J
F	R5149-5151,5153,5155	RS1/10S0R0J
	Other Resistors	RS1/16SS####D

Mark No.	Description	Part No.
	CAPACITORS	
	C5106,5107,5136,5140	CKSSYB103K16
	C5108,5109	CCSSCH8R0D50
	C5113,5118,5119	DCH1201
	C5120,5129,5131,5133	CKSSYF104Z16
	C5127,5128,5130,5132	CKSSYB104K10
	C5134,5135,5137,5139	CKSSYB104K10
	C5138,5144,5155-5165	CKSSYF104Z16
	C5141-5143,5145,5151	CKSSYB104K10
	C5150	CKSSYB103K16
	C5153,5191	CKSSYB104K10
	[ADC BLOCK]	
	SEMICONDUCTORS	
	IC5301	AD9985KSTZ-110
	RESISTORS	
	R5301-5303	BCN1067
	R5305	RS1/16SS2701F
	R5307,5308,5312,5313	RS1/16SS470J
	R5310,5311	RS1/10S0R0J
	Other Resistors	RS1/16S###J
	CAPACITORS	
	C5301	CKSSYB823K10
	C5302	CKSSYB822K16
	C5303-5305	CKSSYB473K16
	C5307,5313	CKSSYB104K10
	C5308-5312,5314-5316	CKSSYF104Z16
	C5318,5319	CKSSYF104Z16
	[HDMI BLOCK]	
	SEMICONDUCTORS	
	IC5401	SII9023CTU
	IC5402	PCM1754DBQ
	IC5403	BR24L02FJ-W
	Q5401	HN1K02FU
	Q5407	UMD2N
	Q5413	RN1902
	D5401	1SS301
	D5407	UDZS6R8(B)
	MISCELLANEOUS	
	JA5401 HDMI CONNECTOR	AKP1278
	X5401 CRYSTAL	ASS1192
	RESISTORS	
	R5401-5403	BCN1071
	R5413,5429	RS1/10S0R0J
	R5450	RAB4CQ473J
	R5451	RAB4CQ100J
	R5452,5455	RAB4CQ103J
	R5454	RAB4CQ470J
	Other Resistors	RS1/16SS###J
	CAPACITORS	
	C5401,5402	CCSSCH120J50
	C5403,5404,5408,5410	CKSSYF104Z16
	C5405,5407,5473	DCH1201
	C5406	CCSSCH101J50
	C5412,5414,5416,5418	CKSSYF104Z16

Mark No.	Description	Part No.
	C5423,5426-5428,5430	CKSSYF104Z16
	C5432,5434,5436,5438	CKSSYF104Z16
	C5440,5442,5444,5445	CKSSYF104Z16
	C5447,5448,5455,5457	CKSSYF104Z16
	C5458,5460,5462,5464	CKSSYF104Z16
	C5466,5468,5469,5471	CKSSYF104Z16
	C5472	CKSSYF104Z16

[DSEL BLOCK]

SEMICONDUCTORS

	IC8001	PD6523A
	IC8002	TC74LCX125FT
	IC8003	TC74VCX574FT

MISCELLANEOUS

	L8001-8003	BTX1042
⚠	F8004	ATX1058
	X8001 CRYSTAL	ASS1194

RESISTORS

	R8001,8002	ACN1251
	R8003,8008	RAB4CQ680J
	R8004-8006	BCN1071
	R8009-8011	BCN1067
	R8026,8027	RAB4CQ101J
	Other Resistors	RS1/16SS###J

CAPACITORS

	C8002	CKSSYB102K50
	C8003,8005,8014-8020	CKSSYF104Z16
	C8025,8027	CKSSYF104Z16
	C8026	DCH1201

[IP BLOCK]

SEMICONDUCTORS

	IC8101	PE5504B
	IC8102,8103	EDS6432AFTA-75-E

MISCELLANEOUS

	L8101-8104	BTX1042

RESISTORS

	R8101-8104,8106-8110	BCN1067
	R8105	BCN1071
	R8111,8116	ACN1246
	R8112-8115,8117	ACN1251
	R8123	RAB4CQ103J
	R8135	RAB4CQ470J
	R8136	RAB4CQ101J
	Other Resistors	RS1/16SS###J

CAPACITORS

	C8101	CKSSYB102K50
	C8112-8115,8117-8120	CKSSYF104Z16
	C8134-8145	CKSSYF104Z16

[MULTI BLOCK]

SEMICONDUCTORS

	IC8201	PEG121B
	IC8202	AGC1019
	IC8203	TC74VHC08FTS1

MISCELLANEOUS

	L8201-8205	BTX1042

RESISTORS

	R8201-8205	ACN1246
	R8206-8208,8255	ACN1251
	R8209	RS1/10S0R0J
	R8214,8215,8248	RAB4CQ103J
	R8225,8245	BCN1071
	R8246	BCN1073
	R8249	RAB4CQ680J
	Other Resistors	RS1/16SS###J

CAPACITORS

	C8202	CKSSYB102K50
	C8203-8205	DCH1201
	C8221-8234,8239	CKSSYF104Z16

[IF UCOM BLOCK]

SEMICONDUCTORS

	IC8301	AGC1016
	IC8302	PST9230N
	IC8303	TC74VHC08FTS1
	IC8304	TC7W126FU
	IC8306	MAX3232CPW
	IC8307	TC74VHC125FTS1
	IC8308	TC74VHC00FTS1
	Q8301,8315	DTA124EUA
	Q8306,8308	DTC124EUA
	Q8307,8312	2SA1586
	Q8309,8313	2SC4116
	Q8310,8314	HN1C01FU
	D8304,8305	1SS355

MISCELLANEOUS

	X8301 CERAMIC RESONATOR	ASS1168
	X8302 CRYSTAL OSCILLATOR	ASS1172
	CN8301 9P D-SUB SOCKET	AKP1213

RESISTORS

	R8307	RAB4CQ473J
	R8348,8351,8352	RAB4CQ103J
	R8376	RS1/10S0R0J
	Other Resistors	RS1/16SS###J

CAPACITORS

	C8301	CKSSYB472K25
	C8302,8303	CCSSCH220J50
	C8305,8312	CCSRCH471J50
	C8306-8311,8322,8323	CKSSYF104Z16
	C8313-8317,8321,8324	CKSSYB104K10

[MAIN UCOM BLOCK]

SEMICONDUCTORS

	IC8401	MB91305PMC-G-BND
	IC8402	AGC1018
	IC8403	PST3628UR
	IC8407	PQ200WNA1ZPH
	IC8409	BR24L64F-W
	IC8410,8411	TC74VHC125FTS1

Mark No.	Description	Part No.
	Q8401	2SJ461A
	Q8402	DTC124EUA
A	Q8403,8405	HN1K02FU
	D8401	1SS355
	D8402	SML-311UT
	D8403-8405	1SS301
	MISCELLANEOUS	
	X8401 CERAMIC OSCILLATOR	CSS1616
	CN8401 50P CONNECTOR PBF	AKM1353
	RESISTORS	
	R8401,8402	ACN1248
	R8408,8467	RAB4CQ101J
B	R8454,8455	RS1/16S0R0J
	R8464	RS1/16S4701F
	R8465	RS1/16S1801F
	R8466	RS1/16S1001F
	R8484	RS1/16SS5602F
	R8485	RS1/16SS2002F
	Other Resistors	RS1/16SS###J
	CAPACITORS	
	C8402-8405,8408-8413	CCSSCH470J50
	C8414	CKSSYB102K50
C	C8416,8426	CCSSCH120J50
	C8417	CKSSYB472K25
	C8418,8443	CKSSYB103K16
	C8421-8423,8425	CCSSCH470J50
	C8424,8460	DCH1165
	C8427-8434,8436-8442	CKSSYF104Z16
	C8445-8454,8459	CKSSYF104Z16

TANSHI ASSY

Mark No.	Description	Part No.
D	**SEMICONDUCTORS**	
	IC9001	BH3544F
	Q8801-8804	HN1A01FU
	Q8805-8808,9019,9020	2SA1586
	Q8809-8811,9013	UMD2N
	Q8812,8814,8821,8823	2SC4116
	Q8813	HN1C01FU
	Q8825-8829,8832	2SC4116
	Q9001	HN1B04FU
	Q9009-9011	2SC4116
	Q9017,9018	2SD2114K
E	D9013	1SS301
	D9014-9016	UDZS5R1(B)
	TH9001	TH05-3H103F
	MISCELLANEOUS	
	JA8801-8803 RGB CONNECTOR	AKP1295
	JA9001 3P PIN JACK	AKB1332
	JA9005 2P PIN JACK	AKB1331
	CN8802,9003 50P CONNECTOR PBF	AKM1349
	CN9002 5P PLUG	KM200NA5L
	RESISTORS	
F	R8801,8803-8805,8807	RS1/10S151J
	R8802,8806,8808	RS1/10S121J
	R8809,8810	RS1/10S151J
	R8812,8821,8870,8877	RS1/16S680J

Mark No.	Description	Part No.
	R8839-8841,8866,8894	RS1/16S75R0F
	R8885,8893	RS1/16S680J
	R8898,8915-8917,8922	RS1/16S75R0F
	R9008	RS1/16S4701F
	R9037,9038,9040	RS1/16S75R0F
	R9046-9048	RS1/16S75R0F
	Other Resistors	RS1/16SS###J
	CAPACITORS	
	C8801,8806,8812,8814	DCH1201
	C8802,8815,8819,9005	DCH1165
	C8803,8813,8818,9001	CKSSYF104Z16
	C8804,8805,8810,8811	CCG1205
	C8816,8817,9007,9014	DCH1201
	C8820,8821,9045,9046	CCG1205
	C8825-8836,8857,8858	CKSSYB102K50
	C8837-8839	ACH1454
	C8840-8848,8850,8851	CKSRYB105K10
	C8853-8856,9028-9030	CKSRYB105K10
	C9002,9039,9040	CKSSYB103K16
	C9006	DCH1165
	C9008,9009	CKSSYB104K10
	C9013,9044	CKSSYF104Z16
	C9017	CEHVKW470M6R3
	C9031,9032	CKSRYB102K50
	C9033-9035,9041,9042	CKSRYB105K10
	C9038	CKSSYB473K16

SIDE ASSY

Mark No.	Description	Part No.
	MISCELLANEOUS	
	9203,9204 SCREW TERMINAL	VNE1949
	SEMICONDUCTORS	
	Q9201-9205	2SC4116
	D9201-9207	UDZS9R1(B)
	D9208,9209	UDZS5R6(B)
	MISCELLANEOUS	
	JA9201 PIN JACK 3P	AKB1303
	JA9202 4P MINI DIN SOCKET	AKP1238
	CN9201 MINI JACK	AKN1028
	RESISTORS	
	R9245,9246	ACN1260
	Other Resistors	RS1/16SS###J
	CAPACITORS	
	C9201,9202	ACH1454
	C9204,9208,9209	CKSSYF104Z16
	C9213,9214	CKSRYB105K10
	C9215,9216	CKSRYB102K50

PC ASSY

Mark No.	Description	Part No.
	MISCELLANEOUS	
	9302 SCREW TERMINAL	VNE1949

Mark No.	Description	Part No.
	SEMICONDUCTORS	
	IC9301	TC74VHC08FTS1
	IC9302	TC7WH123FU
	IC9303	BR24C21FJ
	Q9301	UMD2N
	D9301,9302	1SS301
	D9306-9309	UDZS5R6(B)
	MISCELLANEOUS	
	CN9301	CKS3826
	CN9303	AKP1214
	RESISTORS	
	R9330	RAB4CQ101J
	Other Resistors	RS1/16SS###J
	CAPACITORS	
	C9304,9305	CCSRCH220J50
	C9306	CKSRYB105K10
	C9307,9315,9316	DCH1201
	C9308,9313,9314,9317	CKSSYF104Z16

42E AUDIO ASSY

	MISCELLANEOUS	
	3772,3773 SCREW	PMB30P100FNI
	3774,3775 SCREW	VBB30P100FNI
	SEMICONDUCTORS	
	IC3751	LA4625
	IC3752	PQ120DNA1ZPH
	IC3753	NJW1183GK1
	Q3751,3754,3755,3757	2SA1586
	Q3756,3759	2SC4116
	Q3758,3760	DTC124EUA
	D3751	1SS355
	MISCELLANEOUS	
⚠	F3751,3752	ATF1224
	KN3751,3752 WRAPPING TERMINAL	VNF1084
	CN3751 3P CONNECTOR	B3P-VH
	RESISTORS	
	R3803	RD1/2MMF2R2J
	Other Resistors	RS1/16S###J
	CAPACITORS	
	C3752,3753	CEHAT2R2M50
	C3754,3805	CFTLA103J50
	C3755	CEHAT472M25
	C3757	CEHAT471M25
	C3758,3760,3796	CKSRYB103K50
	C3759	CEHAT331M16
	C3761,3764,3786,3798	CEHAT101M16
	C3762	CEHAT220M50
	C3763	CEHATR47M50
	C3766,3780,3783-3785	CEHAT1R0M50
	C3767,3770,3781,3782	CFTLA104J50
	C3769,3815	CKSRYB222K50
	C3771-3774,3787,3789	CKSRYB224K16
	C3775,3777,3788,3790	CEHAT100M50
	C3778	CFTLA334J50
	C3779	CKSRYB822K50
	C3791,3799	CEHAT100M50
	C3792-3795,3806,3807	CFTLA104J50
	C3797,3808,3812,3814	CEHAT1R0M50
	C3800,3801	CKSRYB224K16
	C3811	CFTLA223J50
	C3813	CFTLA104J50
	C3816,3817	ACH1456
	C3818-3821	CCSRCH221J50
	C3822-3825	CKSRYB682K50
	C3826-3829	CKSRYF104Z50
	C3838,3839	CEHAT4R7M50

SIDE KEY ASSY

	MISCELLANEOUS	
⚠	L9501-9504	QTL1013
	S9501-9507	CSG1155
	RESISTORS	
	All Resistors	RS1/16S###J
	CAPACITORS	
	C9501	CKSRYF104Z16
	C9502,9503	CCSRCH101J50

42 & 60 LED ASSY

	SEMICONDUCTORS	
	D9601	SML-521MDW
	D9602	TLRV1022
	D9603	SML512BC4T
	MISCELLANEOUS	
	CN9601 CONNECTOR	AKP1303
	RESISTORS	
	All Resistors	RS1/16S###J
	CAPACITORS	
	C9606,9610,9614	CKSSYF103Z50
	C9611	CKSRYF103Z50

LED IR ASSY

	SEMICONDUCTORS	
	IC9702	SBX3050-01
	Q9701	2SA1586
	D9701	1SS302
	D9703	SML-521MDW
	MISCELLANEOUS	
	CN9701 CONNECTOR	AKP1303
	RESISTORS	
	R9701,9702,9707,9712	RS1/16S0R0J
	R9713	RS1/16S121J
	R9714	RS1/16S331J
	Other Resistors	RS1/16SS###J

Mark No.	Description	Part No.
	CAPACITORS	
	C9701	CKSSYB102K50
A	C9702	CKSSYF104Z16
	C9703 (10/6.3V)	ACG7046
	C9704	CKSSYF103Z50
	C9705	CKSRYF103Z50
	All Resistors	RS1/16S###J

42 X DRIVE ASSY

	MISCELLANEOUS	
	1001	BMZ30P080FTC
B	1001	ANH1637
	1002	AEH1092
	1002	ANH1639
	[42X LOGIC BLOCK]	
	SEMICONDUCTORS	
	IC1001	TC74ACT541FT
	IC1002	TC74VHC00FTS1
	MISCELLANEOUS	
C	CN1001	VKN1310
	RESISTORS	
	R1001,1003	RAB4C470J
	R1008,1009,1020	RAB4C472J
	Other Resistors	RS1/16S###J
	CAPACITORS	
	C1001,1002	CKSRYB104K16
	C1003	CEHAT470M16
	C1004	CCSRCH680J50
D	**[42X RESONANCE BLOCK]**	
	SEMICONDUCTORS	
	IC1101	AXF1145
	IC1141	BA10393F
	Q1141	2SC4116
	D1101-1105	D1FL40
	MISCELLANEOUS	
	L1101,1102	ATH1155
	L1103-1106	ATH1193
E	**RESISTORS**	
	R1101	ACN1168
	R1106	ACN1252
	R1121	RS2MMF100J
	R1122,1123	RS1/10S104J
	R1142,1146	RS1/10S1003F
	R1148,1150	RS1/16S5601F
	R1151,1155	RS1/16S6801F
	Other Resistors	RS1/16S###J
	CAPACITORS	
	C1101,1112,1113	ACG1112
F	C1102,1146	CKSRYB105K6R3
	C1103	CKSYB105K25
	C1105	CCG1186
	C1121	ACG1126

Mark No.	Description	Part No.
	C1141,1142,1144,1145	CKSRYB104K16
	C1161-1164,1166	ACE1168
	C1167,1168	ACG1129
	[42X SUS BLOCK]	
	SEMICONDUCTORS	
	IC1201	MM1565AF
	IC1202	AXF1143
	IC1251	TND301S
	IC1252	PS9117
	IC1271	TND307TD
	Q1251	2SC2412K
	Q1272	2SK3325
	D1201	1SS355
	D1251	UDZS5R6(B)
	D1252	CRH01
	D1281	1SS302
	D1282	UDZS16(B)
	MISCELLANEOUS	
	L1201,1205,1231	LFEA100J
	L1204,1211	ATH1186
	F1201	CTF1449
	KN1201-1206,1208-1211	ANK-142
	CN1201	B8B-EH
	CN1202	B6B-EH
	RESISTORS	
	R1204	ACN1166
	R1213	ACN1168
	R1276,1277	RS3LMF331J
	Other Resistors	RS1/16S###J
	CAPACITORS	
	C1204,1207,1223,1251	CKSRYF104Z50
	C1206	CEHAT101M25
	C1208	CEHAT470M16
	C1211,1225-1227,1297	ACG1129
	C1212,1213	ACH1424
	C1214-1217	ACE1178
	C1220	CKSYB105K25
	C1221	CKSRYB105K6R3
	C1222,1272	CEHAT470M25
	C1231	CEHAT101M10
	C1253,1273	CKSRYF104Z50
	C1283	CEHAT2R2M2E
	C1298	ACG1129
	[42X D-D CON BLOCK]	
	SEMICONDUCTORS	
	IC1321	PS2701A-1(L)
	IC1326	TA76431FR
	Q1301,1323	2SD1898
	Q1302	2SC4081
	Q1321,1325,1351	HN1C01FU
	Q1324	2SA1037K
	D1301,1302,1326,1327	CRH01
	D1303,1324	1SS301
	D1304,1307,1325,1328	1SS355

Mark No.	Description	Part No.
D1306,1323,1331		UDZS5R1(B)
D1321		D1FK60
D1329,1330		UDZS4R7(B)
MISCELLANEOUS		
VR1321		CCP1392
T1301		ATK1159
T1321		ATK1160
RESISTORS		
R1321,1322,1326,1339		RS1/10S224J
R1337		RAB4C472J
Other Resistors		RS1/16S###J
CAPACITORS		
C1301,1303,1323		CKSRYB103K50
C1302,1321		CEHAT101M25
C1304,1306		CKSRYB104K16
C1307,1324,1327		CKSYB105K25
C1325		ACH1428
C1326		CEHAT100M50

SUS CLAMP 1 ASSY

Mark No.	Description	Part No.
SEMICONDUCTORS		
D1631		DF20L60U
MISCELLANEOUS		
KN1631		VNF1084
KN1632		ANK-142
CN1631		B3B-EH
CAPACITORS		
C1632		ACE1179

SUS CLAMP 2 ASSY

Mark No.	Description	Part No.
SEMICONDUCTORS		
D1641		DF20L60U
MISCELLANEOUS		
KN		1641VNF1084
KN		1642ANK-142
CN1641		B3B-EH
CAPACITORS		
C1642		ACE1179

42 Y DRIVE ASSY

Mark No.	Description	Part No.
MISCELLANEOUS		
2001		AEH1092
2001		ABA1349
2001		ANG2790
2001		ANH1638
2002		BMZ30P080FTC
2002		ANH1639

Mark No.	Description	Part No.
[42 Y LOGIC BLOCK]		
SEMICONDUCTORS		
IC2001,2004		TC74ACT541FT
IC2002		TC74ACT540FT
IC2003,2005		TC74VHC08FTS1
MISCELLANEOUS		
CN2001 40P CONNECTOR		AKM1348
RESISTORS		
R2001,2002,2017,2021		RAB4C470J
R2003,2006		RAB4C101J
R2004,2005,2019,2020		RAB4C472J
R2038,2039		RAB4C472J
Other Resistors		RS1/16S###J
CAPACITORS		
C2001,2002,2004-2006		CKSSYB104K10
C2003		CEHAT470M16
C2008		CCSRCH680J50
[42Y RESONANCE BLOCK]		
SEMICONDUCTORS		
IC2101		AXF1145
IC2141		BA10393F
Q2141		2SC4081
D2101-2105		D1FL40
MISCELLANEOUS		
L2101,2102		ATH1155
L2103-2106		ATH1193
RESISTORS		
R2101		ACN1174
R2102		RS2MMF100J
R2103,2107		RS1/10S104J
R2108		ACN1241
R2142,2143		RS1/10S1003F
R2146,2149		RS1/16S5601F
R2147,2151		RS1/16S6801F
Other Resistors		RS1/16S###J
CAPACITORS		
C2101,2145		CKSRYB105K6R3
C2102		CKSYB105K25
C2103,2107,2108 (0.22/250V)		ACG1112
C2104,2106 (470p/630V)		ACG1126
C2109-2112 (3300p/630V)		ACG1129
C2131-2134,2136		ACE1168
C2141,2143,2144		CKSSYB104K10
[42Y SUS BLOCK]		
SEMICONDUCTORS		
IC2203,2221		TND307TD
IC2231,2251		TND301S
IC2250		PS9117
IC2252,2253		AXF1144
IC2350		MM1565AF

Mark No.	Description	Part No.
	Q2202	2SA2142
	Q2221	2SK3325
A	Q2250	2SC4081
	Q2280,2281	2SK3399
	Q2290	2SK3050
	D2202,2204,2205,2234	CRH01
	D2203,2212,2351	1SS355
	D2211	D1FK60
	D2213	1SS302
	D2232,2271	UDZS16(B)
	D2233	1SS301
	D2250	UDZS5R6(B)
	D2251,2252,2272	CRH01
B		
	MISCELLANEOUS	
	L2350,2351,2354	LFEA100J
	L2353	ATH1186
	F2301-2320	ATX1062
	F2352	CTF1449
	KN2350,2352,2354,2356	ANK-142
	KN2357,2359-2363 GROUND PLATE	ANK-142
	CN2350 9P CONNECTOR	B9B-EH
	CN2351,2352 4P CONNECTOR	B4B-PH
	RESISTORS	
C	R2203	RS3LMF152J
	R2210	RS1/10S151J
	R2211	RS1/10S561J
	R2222,2224	RS2MMF5R6J
	R2277-2281	RS3LMF8R2J
	R2290	RS1MMF471J
	R2304	ACN1174
	R2352	ACN1166
	R2360,2362	ACN1178
	Other Resistors	RS1/16S###J
	CAPACITORS	
D	C2203-2206 (3300p/630V)	ACG1129
	C2207	CCSRCH102J50
	C2208,2221,2339,2364	CEHAT470M25
	C2209,2222,2230,2252	CKSRYF104Z50
	C2226	ACH1427
	C2231 (0.33/100V)	ACG1118
	C2250	CKSSYB104K10
	C2270	ACH1426
	C2271,2272 (0.1/100V)	ACG1124
	C2330,2335,2341,2342	ACE1178
E	C2336,2337	ACH1424
	C2353,2358,2359	CKSRYB105K6R3
	C2354,2360	CKSYB105K25
	C2355,2369	CEHAT101M10
	C2356	CKSRYB104K16
	C2357	CEHAT470M16
	C2363	CKSRYB473K16
	[42Y SCAN BLOCK]	
	SEMICONDUCTORS	
F	IC2401	PS9851-2(P)
	IC2402,2407	TC74AC540FT
	IC2403,2405,2406,2408	PS9117
	D2402	CRH01

Mark No.	Description	Part No.
	MISCELLANEOUS	
	L2401-2403	LFEA100J
	F2401-2404	ATX1059
	CN2401,2402 15P CONNECTOR	AKM1200
	RESISTORS	
	R2407,2421	RAB4C220J
	Other Resistors	RS1/16S###J
	CAPACITORS	
	C2401,2407,2414	CEHAT101M10
	C2402,2403,2405	CKSSYB104K10
	C2404,2411	ACH1413
	C2408-2410,2412	CKSSYB104K10
	[42Y VH D-D CON BLOCK]	
	SEMICONDUCTORS	
	IC2502	MIP2E3DMC
	IC2503	PS2701A-1(L)
	IC2531	BA10358F
	IC2534,2535	TA76431FR
	Q2511	HN1C01FU
	Q2531	2SC3425
	Q2532	2SD2568
	Q2533	2SC2412K
	D2522,2524	CRH01
	D2523,2532	D1FK60
	D2530,2536	UDZS4R7(B)
	D2531	UDZS12(B)
	D2533	UDZS33(B)
	D2534	1SS355
	MISCELLANEOUS	
	L2501	LFEA101J
	VR2503	CCP1390
	VR2531	CCP1392
	T2503	ATK1158
	RESISTORS	
	R2533,2556	RS1/10S104J
	R2534,2535,2541	RS1/10S2203F
	R2542,2545	RS1/16S5601F
	R2548	RS1/16S1003F
	R2549,2557	RS1/16S4702F
	R2550	RS1/16S1802F
	R2553	RAB4C472J
	R2558	RS1/10S0R0J
	Other Resistors	RS1/16S###J
	CAPACITORS	
	C2513	ACH1428
	C2514,2525,2534	CKSRYB104K16
	C2515	CEHAT101M25
	C2516	ACH1360
	C2520	CEHAT101M16
	C2521,2533,2535	CKSRYB104K25
	C2528	CEHAT221M16
	C2531	ACE1177
	C2532	ACH1425
	C2536	CEHAT470M25

Mark No.	Description	Part No.
	[42Y D-D CON BLOCK]	
	SEMICONDUCTORS	
	IC2601,2603,2606	PS2701A-1(L)
	IC2602	BA10358F
	IC2605,2614	TA76431FR
	Q2601,2609	2SA1576A
	Q2602,2613,2641	HN1C01FU
	Q2603,2604,2611	DTC143EUA
	Q2605,2606	2SD1898
	Q2607	2SC2713
	Q2608	2SA2005
	Q2610	2SA1163
	Q2612	2SC4081
	D2601,2603,2609,2618	CRH01
	D2602,2613-2615	1SS355
	D2604,2612	1SS301
	D2605	UDZS5R1(B)
	D2607,2608	UDZS4R7(B)
	D2610	D1FL40
	D2611	1SS226
	D2616	UDZS5R6(B)
	D2617	UDZS15(B)
	MISCELLANEOUS	
	VR2601	CCP1390
	T2601	ATK1161
	T2602	ATK1156
	RESISTORS	
	R2608,2612,2630,2632	RS1/16S4701F
	R2613	RAB4C472J
	R2618	RS1/16S4702F
	R2625,2626	RS1/16S1501F
	R2627	RS3LMF151J
	R2629	RS1/16S1002F
	R2635	RS1/16S4701F
	R2636	RS1/16S5601F
	R2641,2642	RS1/10S224J
	R2652	RS1/16S6801F
	Other Resistors	RS1/16S###J
	CAPACITORS	
	C2601,2604,2609	CKSRYB104K16
	C2602,2615	CKSRYB105K6R3
	C2603	CKSRYF104Z50
	C2605,2612,2614	CKSRYB103K50
	C2606	CEHAT221M6R3
	C2607	CKSRYB102K50
	C2608,2610	CEHAT101M25
	C2611	CKSSYB104K10
	C2613	CEHAT221M25
	All Resistors	RS1/16S###J

42 DIGITAL ASSY

Mark No.	Description	Part No.
	[DIGITAL IF BLOCK]	
	MISCELLANEOUS	
	F3001	CCG1162
	CN3001	AKM1353
	CN3002	AKM1235
	RESISTORS	
	R3007,3010-3016	RAB4C470J
	R3020-3022	RAB4C103J
	Other Resistors	RS1/16SS###J
	[MODULE UCOM BLOCK]	
	SEMICONDUCTORS	
	IC3152,3153	SN74AHC541PW
	IC3155	SN74AHC08PW
	IC3156	BR24L04FJ-W
	IC3157	M62334FP
	IC3159	TC7W126FU
	IC3160,3161	TC74VHC123AFTS1
	Q3151	2SJ461A
	D3151,3152,3154,3155	DAN202U
	D3158,3159,3161-3163	1SS355
	MISCELLANEOUS	
	X3151	CSS1616
	CN3151	AKM1276
	CN3152	CKS4828
	RESISTORS	
	R3155,3160,3170,3176	RAB4C101J
	R3174	RAB4C103J
	Other Resistors	RS1/16SS###J
	CAPACITORS	
	C3151	CEHVKW470M6R3
	C3152,3153,3155-3158	CKSSYB104K10
	C3159,3171,3172,3182	CKSRYB105K6R3
	C3162,3163,3165,3166	CKSSYB104K10
	C3164	CCSSCH101J50
	C3167	CKSSYB103K16
	C3168,3170,3181	CKSSYB104K10
	[PANEL FLASH BLOCK]	
	SEMICONDUCTORS	
	IC3302,3305	PST3628UR
	IC3303	SN74AHC08PW
	IC3304	PST3610UR
	Q3301	RN1901
	Q3302	HN1C01FU
	MISCELLANEOUS	
	X3302	ASS1188
	CN3301	CKS4835
	RESISTORS	
	R3307,3308	RAB4C101J
	Other Resistors	RS1/16SS###J
	CAPACITORS	
	C3301-3303,3306,3308	CKSSYB104K10
	C3304,3307,3309	CKSSYB472K16
	C3305,3310	CKSSYB102K50
	C3311	CCSRCH470J50
	C3315,3316	CKSSYB104K10
	C3317	CCSRCH471J50

Mark No.	Description	Part No.
	[SQ ASIC BLOCK]	
	SEMICONDUCTORS	
	IC3401	PEG239A
	MISCELLANEOUS	
	L3401-3403	QTL1013
	F3401,3402	CCG1162
	RESISTORS	
	R3402,3412	RAB4C101J
	R3405-3407,3409,3410	RAB4C220J
	R3416	RAB4C220J
	R3425	RS1/16SS5601F
	Other Resistors	RS1/16SS###J
	CAPACITORS	
	C3401,3402,3419,3425	CEHVKW101M6R3
	C3403-3413,3417,3418	CKSSYB104K10
	C3420-3424,3426-3432	CKSSYB104K10
	C3445-3448	CKSSYB104K10
	[ADDRESS CN BLOCK]	
	SEMICONDUCTORS	
	Q3501,3502	RN1901
	D3501,3502	DAN202U
	MISCELLANEOUS	
	CN3501-3504,3506	AKM1348
	CN3505	VKN1310
	RESISTORS	
	R3519,3520	RAB4C472J
	R3521,3522,3525	RAB4C101J
	R3524	RAB4C222J
	Other Resistors	RS1/16SS###J
	[DIGITAL DD CON BLOCK]	
	SEMICONDUCTORS	
	IC3601	BA80BC0WFP
	MISCELLANEOUS	
	U3601	AXY1137
	RESISTORS	
	R3611	RAB4C101J
	Other Resistors	RS1/16SS###J
	CAPACITORS	
	C3609	CKSSYB104K10
	C3611	CKSQYB105K16
	C3612	ACH1394
	C3613	CKSSYB103K16

SENSOR ASSY

Mark No.	Description	Part No.
	SEMICONDUCTORS	
	IC3651	MM1522XU
	IC3652	BR24L02FJ-W
	Q3651	HN1B04FU
	MISCELLANEOUS	
	CN3651 5P CONNECTOR	AKM1276
	RESISTORS	
	All Resistors	RS1/16SS###J
	CAPACITORS	
	C3651,3653	CKSRYB105K6R3
	C3652,3654	CKSSYB103K16
	C3656,3657	CKSSYB104K10

42 ADDRESS ASSY

Mark No.	Description	Part No.
	[42 ADR LOGIC]	
	SEMICONDUCTORS	
	IC1501	PEE002A
	MISCELLANEOUS	
	L1504	QTL1013
	CN1501	AKM1348
	CN1502	AKM1290
	RESISTORS	
	R1505-1509	RS1/16SS1000F
	R1530,1531	RS1/16S0R0J
	Other Resistors	RS1/16SS###J
	CAPACITORS	
	C1501	CKSRYB105K6R3
	C1502	ACH1357
	C1503-1507,1552-1555	CKSSYF104Z16
	C1509,1510	CKSSYB102K50
	C1557	CCSSCH470J50
	[42 ADR RESONANCE]	
	SEMICONDUCTORS	
	IC1601,1602	TND307TD
	Q1601,1610	HAT3021R
	Q1602,1609	HAT1110R
	Q1606,1608,1611	QSZ2
	Q1612	2SA1163
	Q1613,1614	RN1901
	D1601,1606,1618,1619	UDZS15(B)
	D1602,1603,1620,1621	EC10UA20
	D1604,1605,1622,1623	CRH01
	D1612	1SS302
	D1625,1628	1SS355
	MISCELLANEOUS	
	L1601,1604	ATH1135
	RESISTORS	
	R1606,1611,1613	RS1/16SS330J
	R1607,1619,1621,1636	RS1/16SS0R0J
	R1637	RS1/16SS0R0J
	Other Resistors	RS1/16S###J

Mark No.	Description	Part No.
CAPACITORS		
C1601,1614		ACG1124
C1602-1605		ACH1405
C1609		ACG1098
C1613		CKSRYB104K25
C1619		CKSYB105K16

42 SCAN A ASSY

SEMICONDUCTORS	
IC2701-2706	SN755870KPZT-P
IC2707	TC7SH08FUS1
D2701-2707	1SS355
MISCELLANEOUS	
CN2701	AKP1261
CN2702	AKM1274
RESISTORS	
R2705,2710,2713,2716	RAB4C221J
R2719,2722	RAB4C221J
Other Resistors	RS1/16S###J
CAPACITORS	
C2701,2711,2721,2731	ACG1125
C2703,2713,2723,2733	CKSRYB105K6R3
C2705-2707,2715-2717	CCSRCH390J50
C2708,2709,2718,2719	CCSRCH331J50
C2710,2720,2730,2740	CCSRCH181J50
C2725-2727,2735-2737	CCSRCH390J50
C2728,2729,2738,2739	CCSRCH331J50
C2741,2751	ACG1125
C2743,2753	CKSRYB105K6R3
C2745-2747,2755-2757	CCSRCH390J50
C2748,2749,2758,2759	CCSRCH331J50
C2750,2760	CCSRCH181J50

42 SCAN B ASSY

SEMICONDUCTORS	
IC2801-2806	SN755870KPZT-P
IC2807	TC7SH08FUS1
D2801-2807	1SS355
MISCELLANEOUS	
CN2801	AKP1261
CN2802	AKM1274
RESISTORS	
R2803,2808,2811,2814	RAB4C221J
R2817,2820	RAB4C221J
Other Resistors	RS1/16S###J
CAPACITORS	
C2801,2811,2821,2831	ACG1125
C2803,2813,2823,2833	CKSRYB105K6R3
C2805-2807,2815-2817	CCSRCH390J50
C2808,2809,2818,2819	CCSRCH331J50
C2810,2820,2830,2840	CCSRCH181J50

Mark No.	Description	Part No.
C2825-2827,2835-2837		CCSRCH390J50
C2828,2829,2838,2839		CCSRCH331J50
C2841,2851		ACG1125
C2843,2853,2861		CKSRYB105K6R3
C2845-2847,2855-2857		CCSRCH390J50
C2848,2849,2858,2859		CCSRCH331J50
C2850,2860		CCSRCH181J50

POWER SUPPLY UNIT

POWER SUPPLY Unit has no service part.

4. BLOCK DIAGRAM AND SCHEMATIC DIAGRAM

4.1 OVERALL WIRING DIAGRAM (1/2)

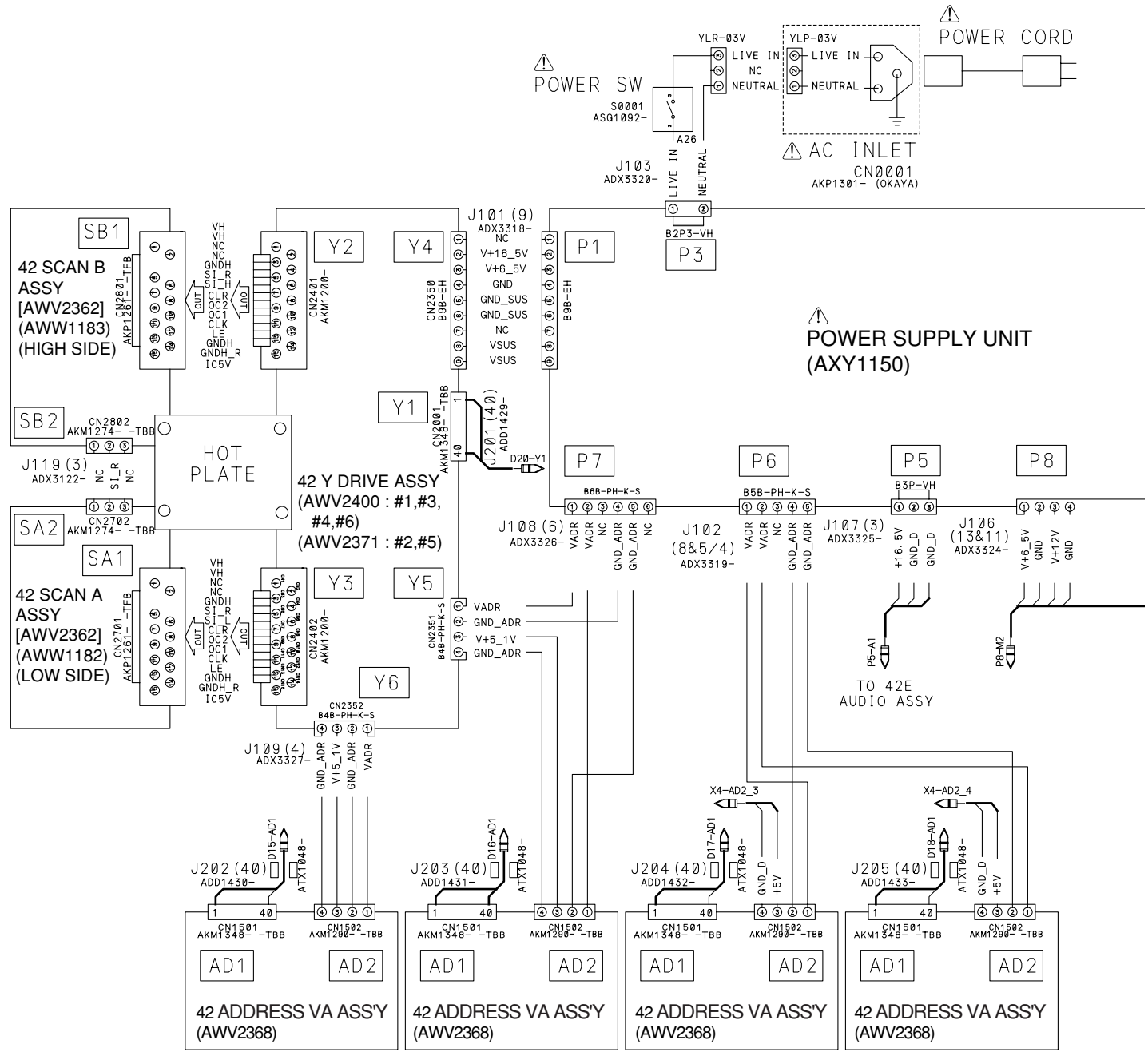

CONNECTOR PIN ASSIGN

CN3001 D11 →CN4001 M1

1. GND	26. VIDEO_G6
2. V+3_3V_UCOM	27. VIDEO_G5
3. INP_MUTE	28. VIDEO_G4
4. THEATER	29. VIDEO_G3
5. VD	30. VIDEO_G2
6. HD	31. VIDEO_G1
7. DE	32. VIDEO_G0
8. GND	33. GND
9. CLK	34. VIDEO_B9
10. GND	35. VIDEO_B8
11. GND	36. VIDEO_B7
12. VIDEO_R9	37. VIDEO_B6
13. VIDEO_R8	38. VIDEO_B5
14. VIDEO_R7	39. VIDEO_B4
15. VIDEO_R6	40. VIDEO_B3
16. VIDEO_R5	41. VIDEO_B2
17. VIDEO_R4	42. VIDEO_B1
18. VIDEO_R3	43. VIDEO_B0
19. VIDEO_R2	44. GND
20. VIDEO_R1	45. RESERVE (NC)
21. VIDEO_R0	46. AC_OFF (NC)
22. GND	47. TXD_MD
23. VIDEO_G9	48. RXD_MD
24. VIDEO_G8	49. REQ_MD
25. VIDEO_G7	50. MODE

CN1501 AD1 →CN3501 D15
CN1501 AD1 →CN3502 D16
CN1501 AD1 →CN3503 D17
CN1501 AD1 →CN3504 D18

1 →40. GND_D	21→20. CN
2 →39. DIV0	22→19. NC
3 →38. DIV1	23→18. LVDS_GND
4 →37. GND_D	24→17. NC
5 →36. V+3.3V	25→16. BP
6 →35. V+3.3V	26→15. BN
7 →34. GND_D	27→14. NC
8 →33. LVDS_GND	28→13. LVDS_GND
9 →32. NC	29→12. NC
10→31. DP	30→11. AP
11→30. DN	31→10. AN
12→29. NC	32→ 9. NC
13→28. LVDS_GND	33→ 8. LVDS_GND
14→27. NC	34→ 7. GND_D
15→26. CLKP	35→ 6. V+8V
16→25. CLKN	36→ 5. V+8V
17→24. NC	37→ 4. GND_D
18→23. LVDS_GND	38→ 3. PSIZE
19→22. NC	39→ 2. ADR_PD
20→21. CP	40→ 1. NC

CN3506 D20 →CN2001 Y1

1→40. YCN_D	21→20. GND_D
2→39. SCN5V_PD	22→19. YSUS_MSK
3→38. SI_L	23→18. YNRST
4→37. SI_H	24→17. YRsv2
5→36. GND_D	25→16. GND_D
6→35. CLR	26→15. YNOFS
7→34. CLK1	27→14. YRsv3
8→33. GND_D	28→13. YSOFT-D
9→32. LE	29→12. GND_D
10→31. OC2	30→11. VOFS_ADJ
11→30. OC1	31→10. VYPRST_ADJ
12→29. GND_D	32→ 9. GND_D
13→28. SUS-B	33→ 8. GND_D
14→27. SUS-U	34→ 7. GND_D
15→26. GND_D	35→ 6. GND_D
16→25. SUS-D	36→ 5. YDD_PD
17→24. YSUS-G	37→ 4. YSUS_PD
18→23. GND_D	38→ 3. SCAN_PD
19→22. YPR-U	39→ 2. YDRV_PD
20→21. SUS_MUTE	40→ 1. PSW

CN3505 D19 →CN1001 X1

1→18. PSW2	
2→17. XSUS_PD	
3→16. XDD_PD	
4→15. XDRV_PD	
5→14. GND_D	
6→13. SUS_MUTE	
7→12. XSUS_MSK	
8→11. GND_D	
9→10. XNR-D	
10→ 9. GND_D	
11→ 8. XSUS-G	
12→ 7. GND_D	
13→ 6. XSUS-D	
14→ 5. GND_D	
15→ 4. XSUS-U	
16→ 3. GND_D	
17→ 2. XSUS-B	
18→ 1. XCN_PD	

POWER CORD Table	
427XD/427XA 4270XD/4270XA	ADG1214-(other) ADG1223-(for UK)
427XDA	ADG1245-
427XC	ADG1209-
427XG	- (other) ADG1233-(for Argentina)

- When ordering service parts, be sure to refer to "EXPLODED VIEWS and PARTS LIST" or "PCB PARTS LIST".
- The ⚠ mark found on some component parts indicates the importance of the safety factor of the part. Therefore, when replacing, be sure to use parts of identical designation.
- The encircled numbers denote measuring point in the schematic diagram. Waveforms, refer to service manual (ARP3392).

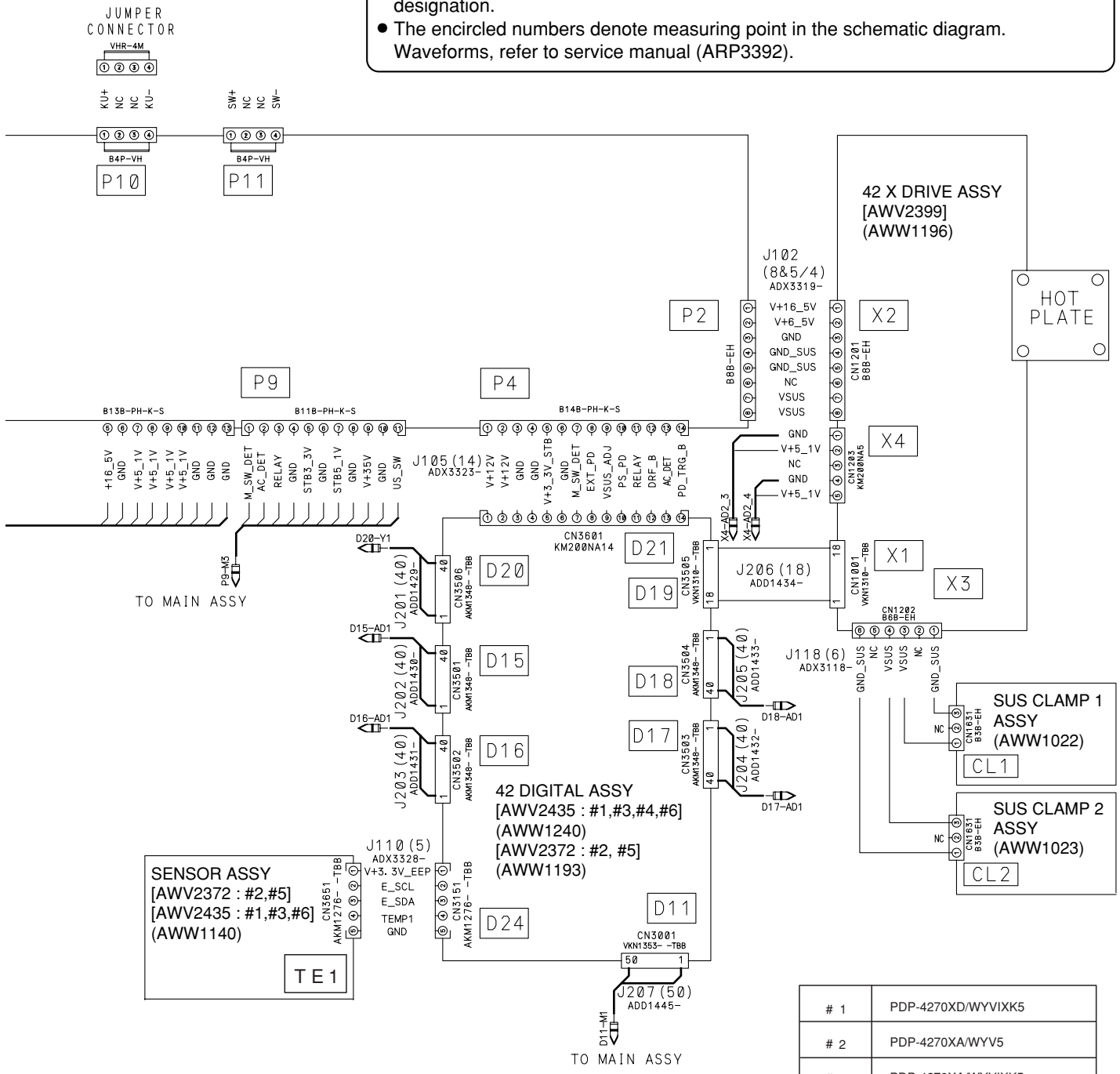

# 1	PDP-4270XD/WYVIXK5
# 2	PDP-4270XA/WYV5
# 3	PDP-4270XA/WYVIXK5
# 4	PDP-427XD/WYVIXK5
# 5	PDP-427XA/WYV5
# 6	PDP-427XA/WYVIXK5

4.2 OVERALL WIRING DIAGRAM (2/2)

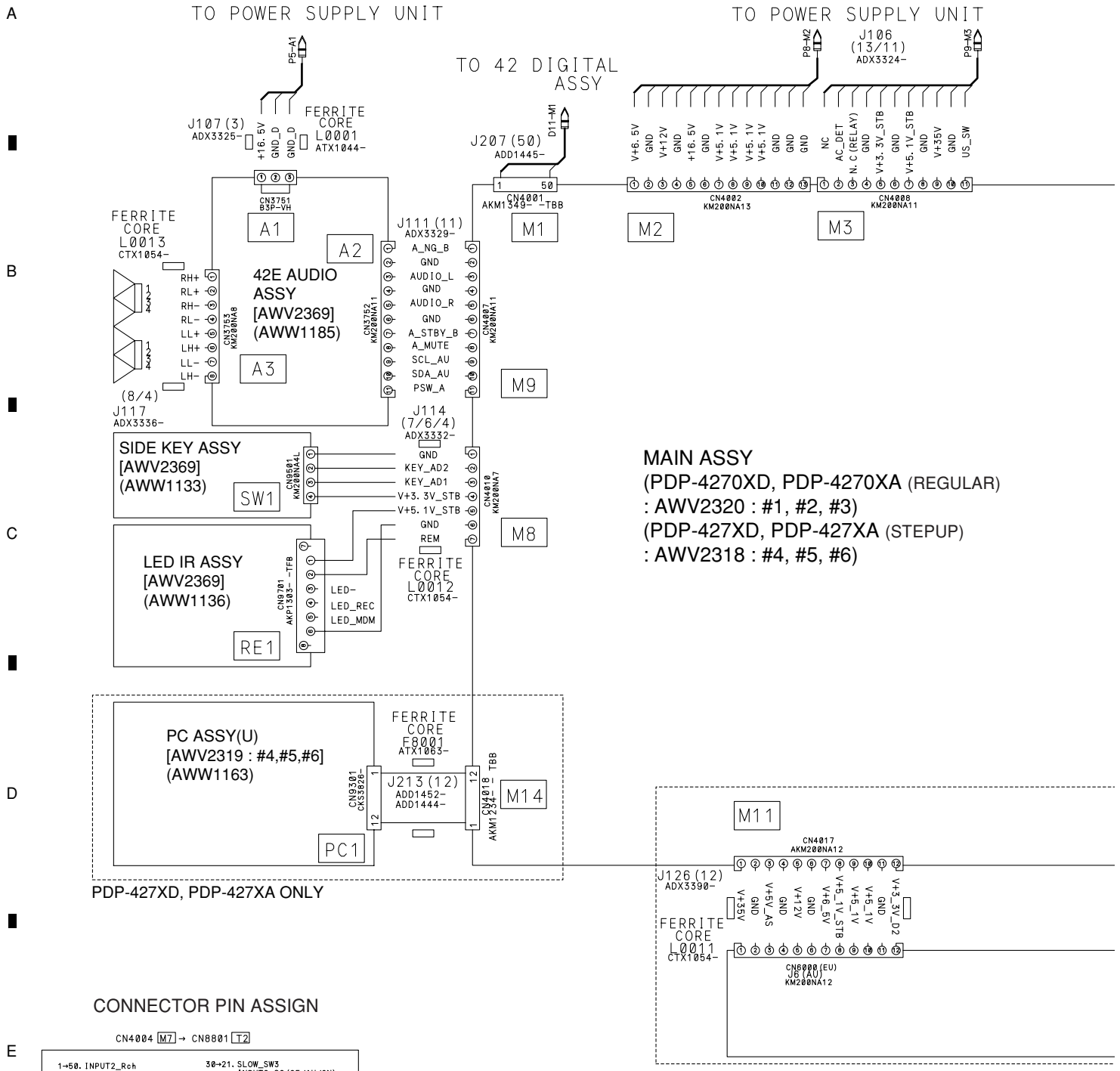

CONNECTOR PIN ASSIGN

CN4004 M7 → CN8801 T2

1→50.	INPUT2_Rch	30→21.	SLOW_SW3 INPUT2_S2(GE/AU/CN)
2→49.	GND	31→20.	SLOW_SW2(EU) INPUT3_SPLUG(GE/AU/CN)
3→48.	INPUT2_Lch	32→19.	SLOW_SW1(EU) INPUT3_S2(GE/AU/CN)
4→47.	GND	33→18.	LINK_IO2(EU) INPUT1_SPLUG(GE/AU/CN)
5→46.	INPUT1_Rch	34→17.	GND
6→45.	GND	35→16.	LINK_IO3(EU) INPUT1_S2(GE/AU/CN)
7→44.	INPUT1_Lch	36→15.	GND
8→43.	GND	37→14.	RAPID_SW1(EU) INPUT1_PULG(GE/AU/CN)
9→42.	SCART_OUT_V(EU) MON_OUT_V(GE/AU/CN)	38→13.	RAPID_SW3(EU) INPUT2_PLUG(GE/AU/CN)
10→41.	GND	39→12.	GND
11→40.	AIR_OUT_V(EU) INPUR2_SY(GE/AU/CN)	40→11.	INPUT1_R(EU) INPUT2_Pr(GE/AU/CN)
12→39.	GND	41→10.	GND
13→38.	INPUT1_V(EU) INPUT3_SY(GE/AU/CN)	42→ 9.	INPUT1_B(EU) INPUT2_Pb(GE/AU/CN)
14→37.	GND	43→ 8.	GND
15→36.	INPUT2_SC	44→ 7.	INPUT1_G(EU) INPUT2_Y(GE/AU/CN)
16→35.	GND	45→ 6.	GND
17→34.	INPUT2_V	46→ 5.	INPUT3_R(EU) INPUT1_Pr(GE/AU/CN)
18→33.	GND	47→ 4.	GND
19→32.	INPUT3_SC	48→ 3.	INPUT3_B(EU) INPUT1_Pb(GE/AU/CN)
20→31.	GND	49→ 2.	GND
21→30.	INPUT3_V	50→ 1.	INPUT3_G(EU) INPUT1_Y(GE/AU/CN)
22→29.	GND		
23→28.	INPUT2_Pr(EU) INPUT1_SC(GE/AU/CN)		
24→27.	GND		
25→26.	INPUT2_Pb(EU) INPUT1_SY(GE/AU/CN)		
26→25.	GND		
27→24.	INPUT2_Y(EU) INPUT1_V(GE/AU/CN)		
28→23.	GND		
29→22.	IN2_CompY_PLUG(EU) INPUT2_SPLUG(GE/AU/CN)		

CN4005 M6 → CN9003 T1

1→50.	V+5V_A	26→25.	GND
2→49.	HP_PLUG	27→24.	HP_L
3→48.	AC_HP_MUTE	28→23.	V+3_3V_STB
4→47.	AC_AM_MUTE	29→22.	SCART_OUT_Rch(EU) MON_OUT_Rch(GE/AU/CN)
5→46.	AC_SC1_MUTE(EU) MON_MUTE(GE/AU/CN)	30→21.	GND
6→45.	AC_SC2_MUTE(EU) GND(GE/AU/CN)	31→20.	SCART_OUT_Lch(EU) MON_OUT_Lch(GE/AU/CN)
7→44.	AC_SC3_MUTE(EU) GND(GE/AU/CN)	32→19.	GND
8→43.	TEMP2	33→18.	AIR_Rch(EU) GND(GE/AU/CN)
9→42.	SR_OUT	34→17.	GND
10→41.	TXD_SR	35→16.	AIR_Lch(EU) GND(GE/AU/CN)
11→40.	RXD_SR	36→15.	GND
12→39.	GND	37→14.	SIDE_Rch
13→38.	AUDIO_OUT_Rch(EU) GND(GE/AU/CN)	38→13.	GND
14→37.	GND	39→12.	SIDE_Lch
15→36.	AUDIO_OUT_Lch(EU) GND(GE/AU/CN)	40→11.	GND
16→35.	SIDE_SC	41→10.	PC_Rch
17→34.	GND	42→ 9.	GND
18→33.	SIDE_S2	43→ 8.	PC_Lch
19→32.	GND	44→ 7.	GND
20→31.	SIDE_SY	45→ 6.	INPUT3_Rch
21→30.	GND	46→ 5.	GND
22→29.	SIDE_V	47→ 4.	INPUT3_Lch
23→28.	SIDE_PLUG	48→ 3.	GND
24→27.	GND	49→ 2.	V+9V_AS
25→26.	HP_R	50→ 1.	V+9V_A

CN4013 M12 → CN6003(EU)/J7(AU)

1.	GND	26.	GND
2.	TXD_DT	27.	CB3_DT
3.	RXD_DT	28.	CB2_DT
4.	GND	29.	GND
5.	DT_FNC	30.	CB1_DT
6.	GND	31.	CB0_DT
7.	CLK_DT	32.	GND
8.	GND	33.	CR7_DT
9.	Y7_DT	34.	CR6_DT
10.	Y6_DT	35.	GND
11.	GND	36.	CR5_DT
12.	Y5_DT	37.	CR4_DT
13.	Y4_DT	38.	GND
14.	GND	39.	CR3_DT
15.	Y3_DT	40.	CR2_DT
16.	Y2_DT	41.	GND
17.	GND	42.	CR1_DT
18.	Y1_DT	43.	CR0_DT
19.	Y0_DT	44.	GND
20.	GND	45.	DE_DT
21.	CB7_DT	46.	GND
22.	CB6_DT	47.	VD_DT
23.	GND	48.	GND
24.	CB5_DT	49.	HD_DT
25.	CB4_DT	50.	GND

CN4000(EU)/J10(AU) → CN4014 M13

1→40.	GND	21→20.	GND
2→39.	DT_MON_V	22→19.	GND
3→38.	GND	23→18.	GND
4→37.	GND	24→17.	GND
5→36.	GND	25→16.	GND
6→35.	GND	26→15.	GND
7→34.	DT_SP_R	27→14.	NC
8→33.	GND	28→13.	GND
9→32.	DT_SP_L	29→12.	GND
10→31.	GND	30→11.	NC
11→30.	OPT_R	31→10.	GND
12→29.	GND	32→ 9.	GND
13→28.	OPT_L	33→ 8.	NC
14→27.	GND	34→ 7.	GND
15→26.	DT_MON_C	35→ 6.	GND
16→25.	GND	36→ 5.	ANT_POW_EU
17→24.	GND	37→ 4.	POW_DET
18→23.	DT_MON_Y	38→ 3.	RST_DT
19→22.	GND	39→ 2.	DT_DET
20→21.	GND	40→ 1.	GND

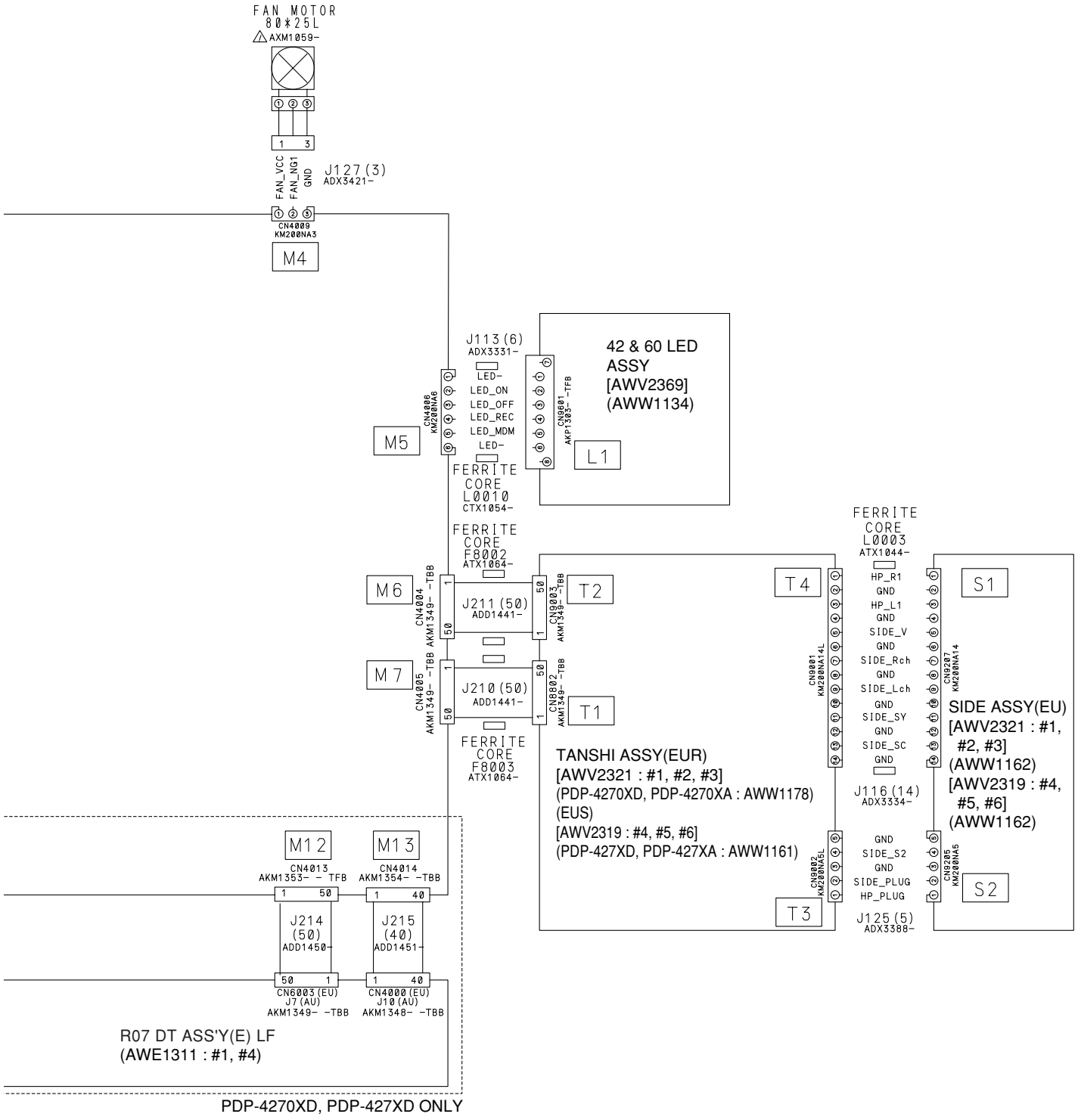

#1	PDP-4270XD/WYVIXK5
#2	PDP-4270XA/WYV5
#3	PDP-4270XA/WYVIXK5
#4	PDP-427XD/WYVIXK5
#5	PDP-427XA/WYV5
#6	PDP-427XA/WYVIXK5

ASS'Y Table	
PDP-427XD/XA	EU Step up
PDP-4270XD/XA	EU Regular

CN4018 M14 →CN9301 PC1

1→	12. PC_R
2→	11. GND
3→	10. PC_B
4→	9. GND
5→	8. PC_G
6→	7. V+9V_A
7→	6. PC_H
8→	5. PC_V
9→	4. V+3.3V_UCOM
10→	3. DSUB_DET
11→	2. WE_ROM
12→	1. V+5V_A

4.3 OVERALL BLOCK DIAGRAM (1/2)

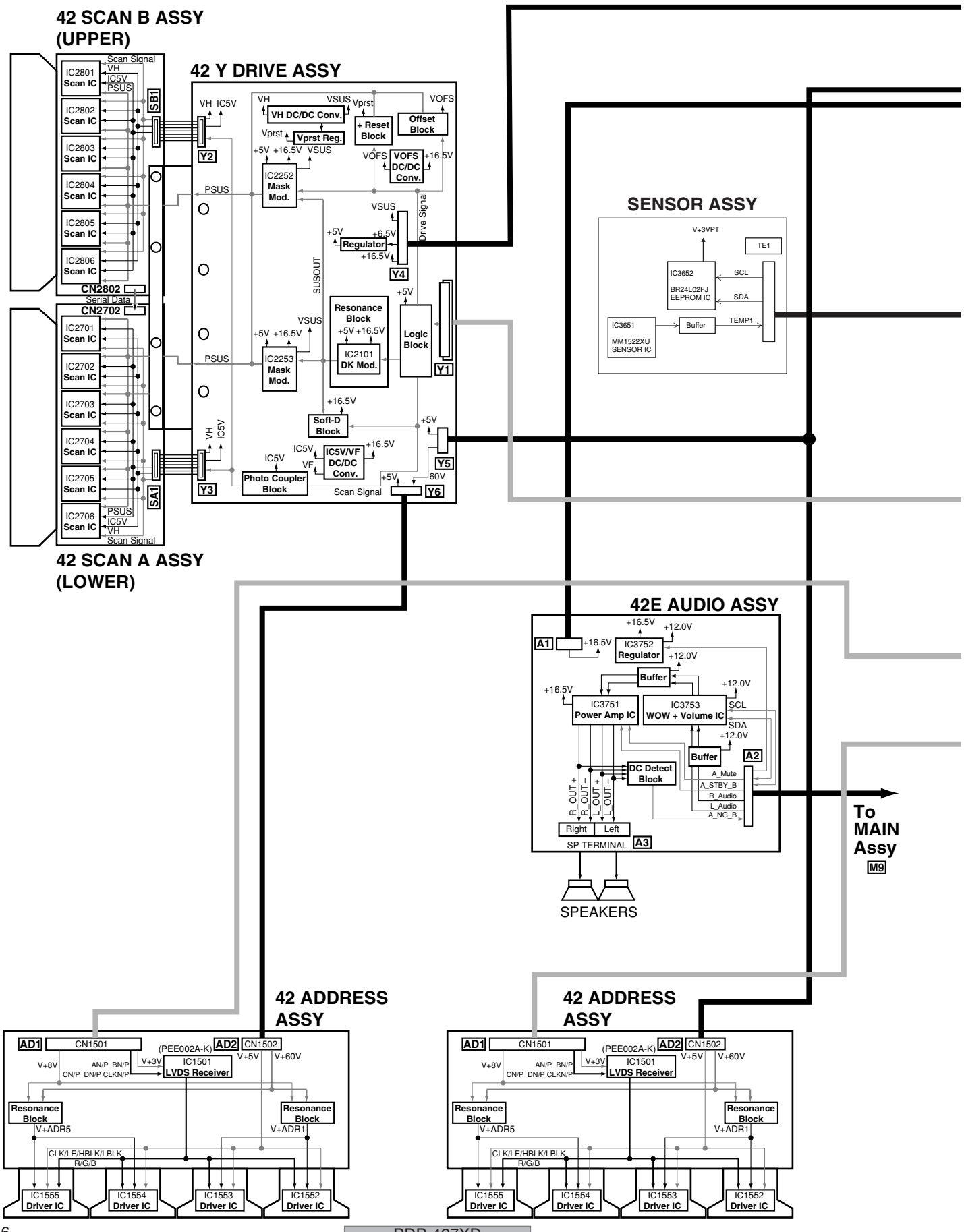

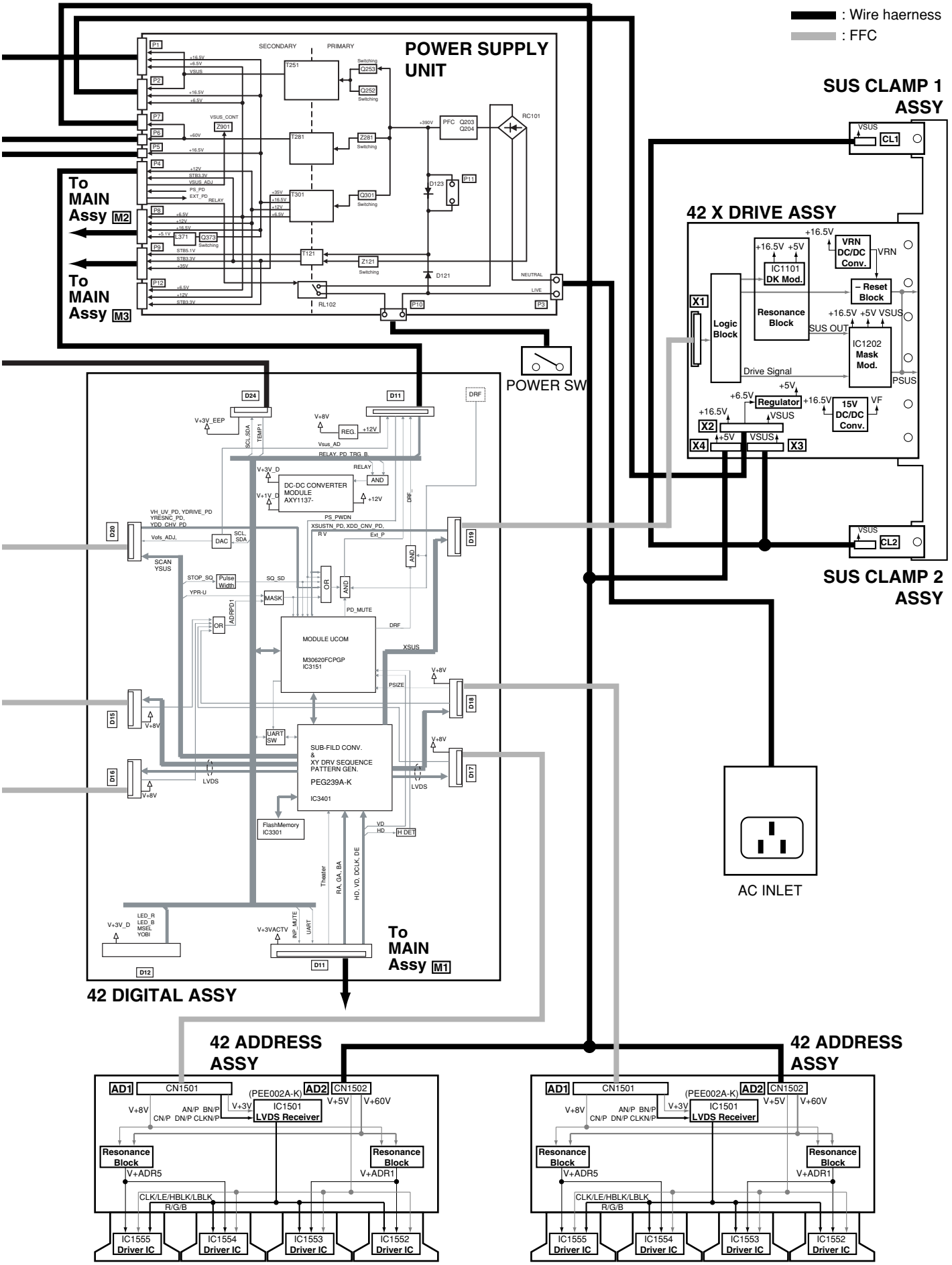
: Wire haerness
: FFC
POWER SUPPLY UNIT
SECONDARY
PRIMARY
To MAIN Assy M2
To MAIN Assy M3
POWER SW
SUS CLAMP 1 ASSY
SUS CLAMP 2 ASSY
42 X DRIVE ASSY
VRN DC/DC Conv.
IC1101 DK Mod.
– Reset Block
Logic Block
Resonance Block
IC1202 Mask Mod.
Drive Signal
Regulator
15V DC/DC Conv.
AC INLET
42 DIGITAL ASSY
DC-DC CONVERTER MODULE AXY1137-
MODULE UCOM
M30620FCPGP IC3151
SUB-FILD CONV. & XY DRV SEQUENCE PATTERN GEN.
PEG239A-K
IC3401
FlashMemory IC3301
To MAIN Assy M1
42 ADDRESS ASSY
CN1501
CN1502
(PEE002A-K)
IC1501 LVDS Receiver
Resonance Block
CLK/LE/HBLK/LBLK R/G/B
IC1555 Driver IC
IC1554 Driver IC
IC1553 Driver IC
IC1552 Driver IC

4.4 OVERALL BLOCK DIAGRAM (2/2)

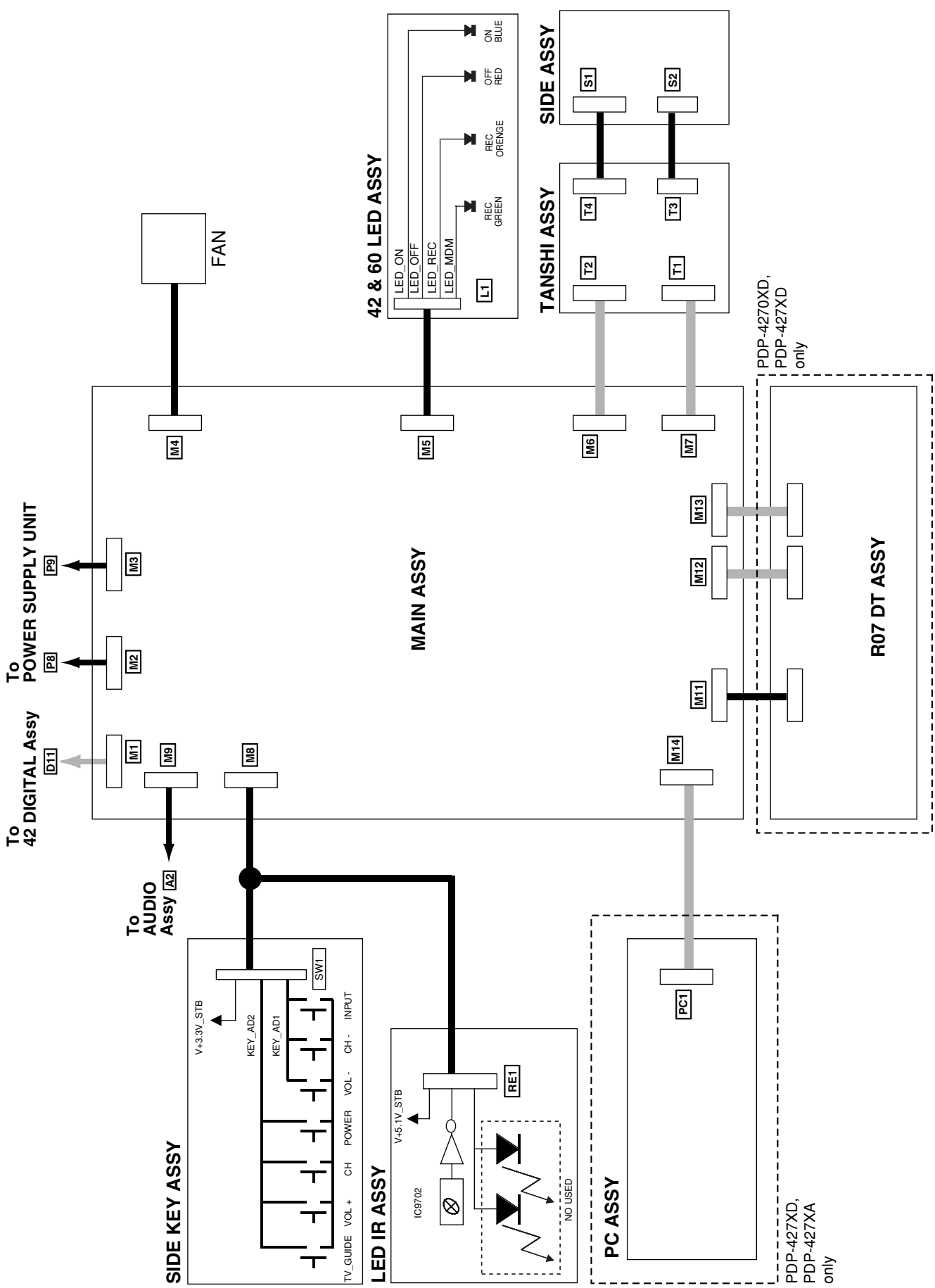

4.5 POWER SUPPLY UNIT

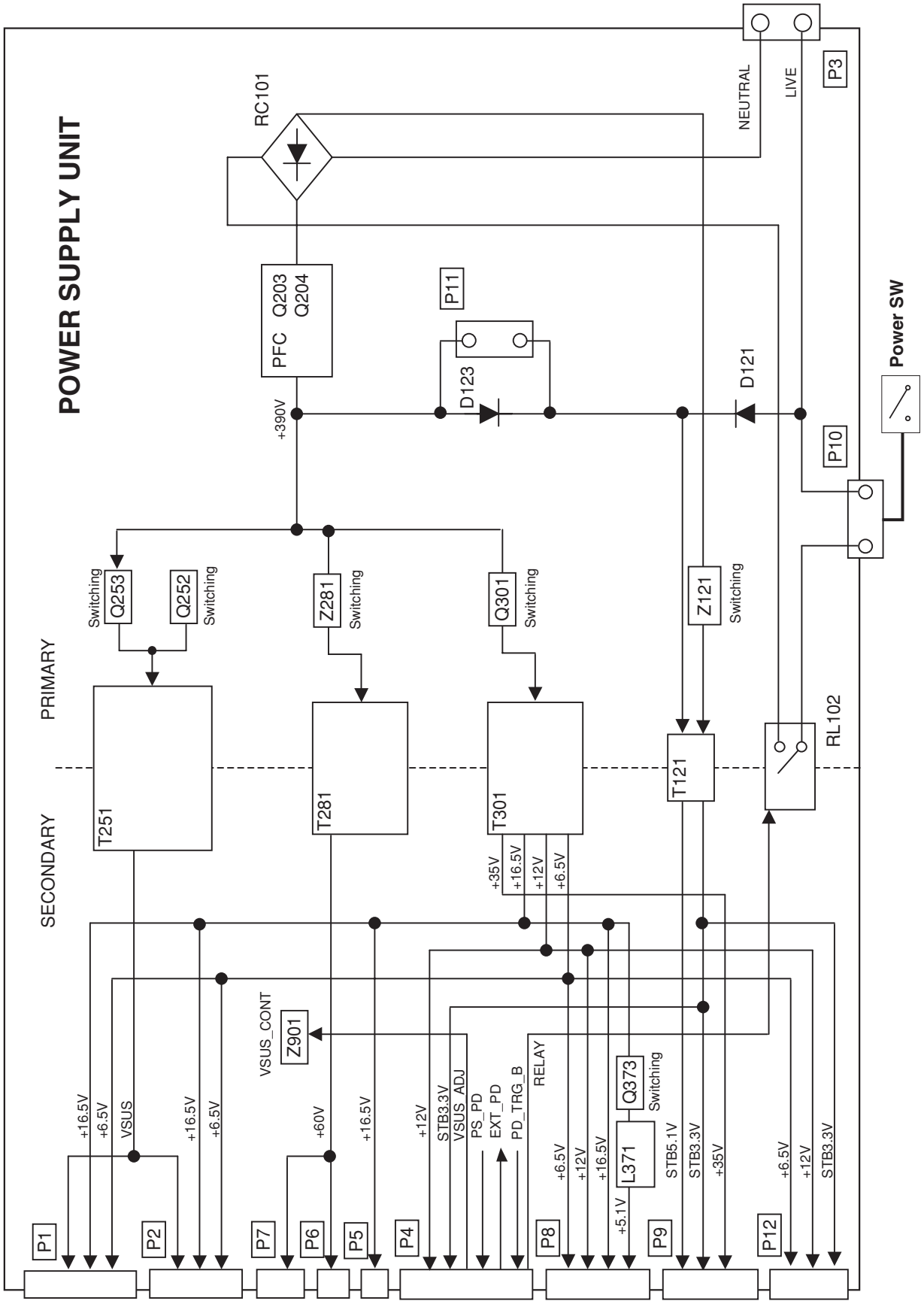

4.6 42 X DRIVE, SUS CLAMP 1 and SUS CLAMP 2 ASSYS

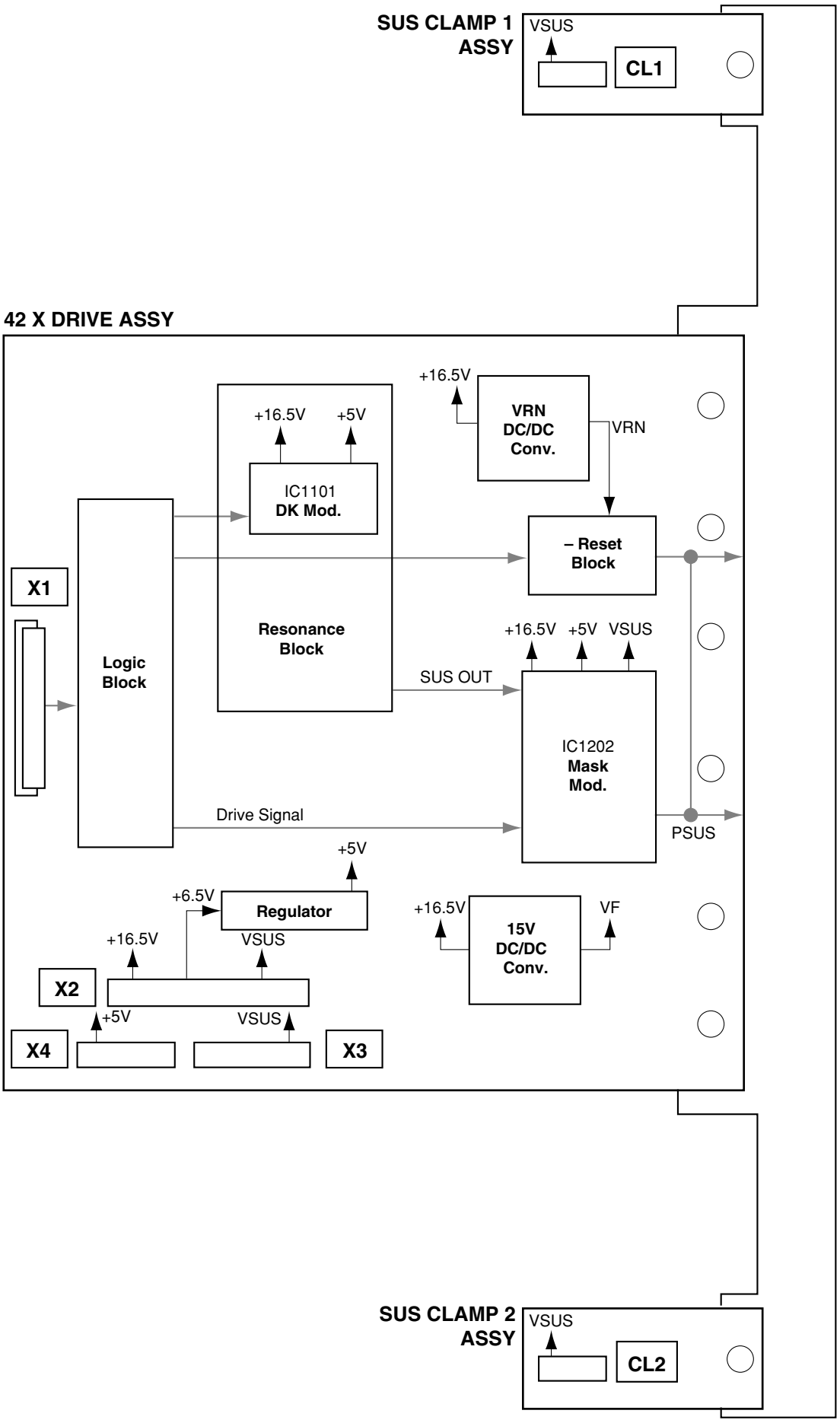

4.7 42 Y DRIVE ASSY

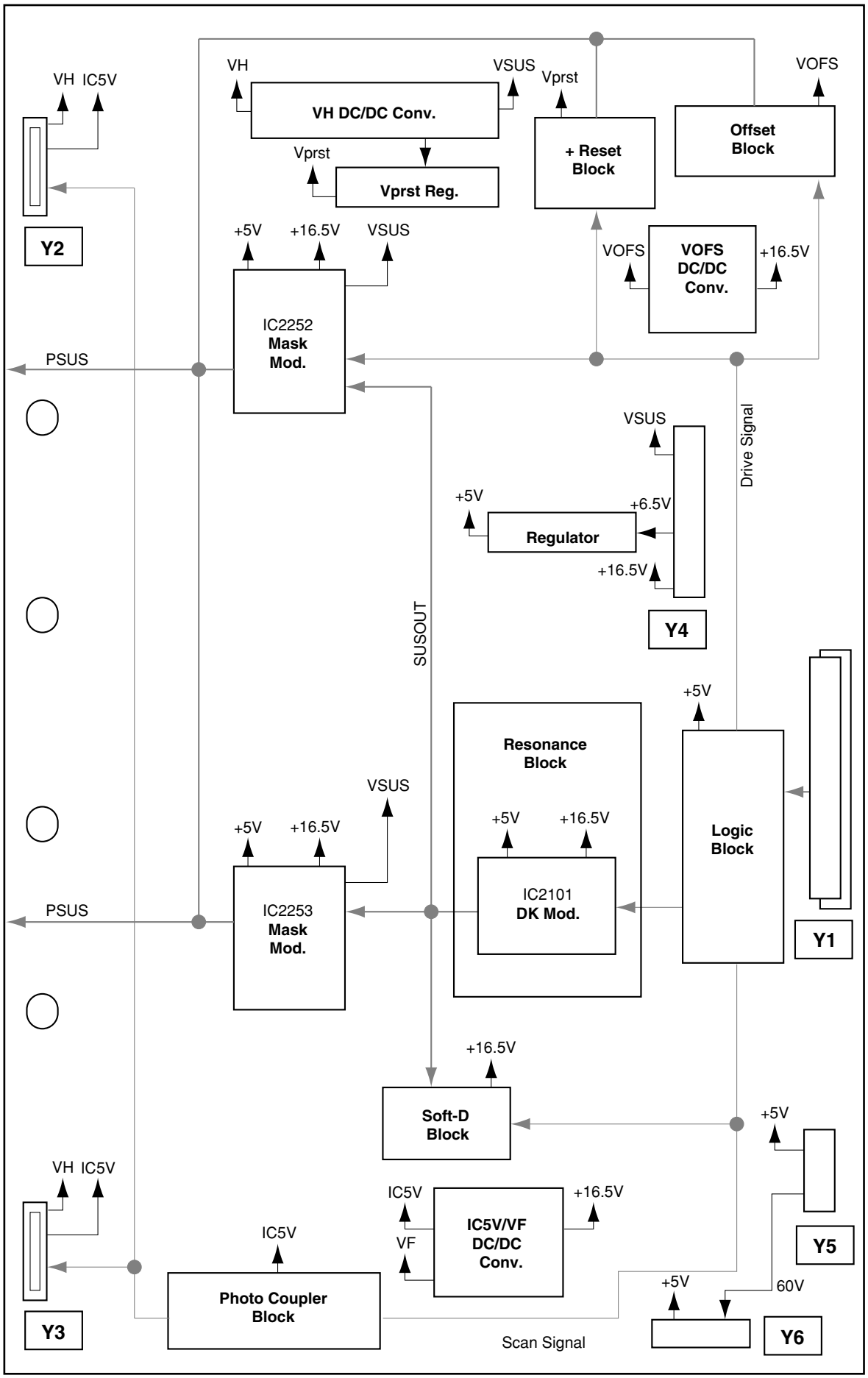

4.8 POWER SUPPLY BLOCK of 42 X DRIVE and 42 Y DRIVE ASSYS

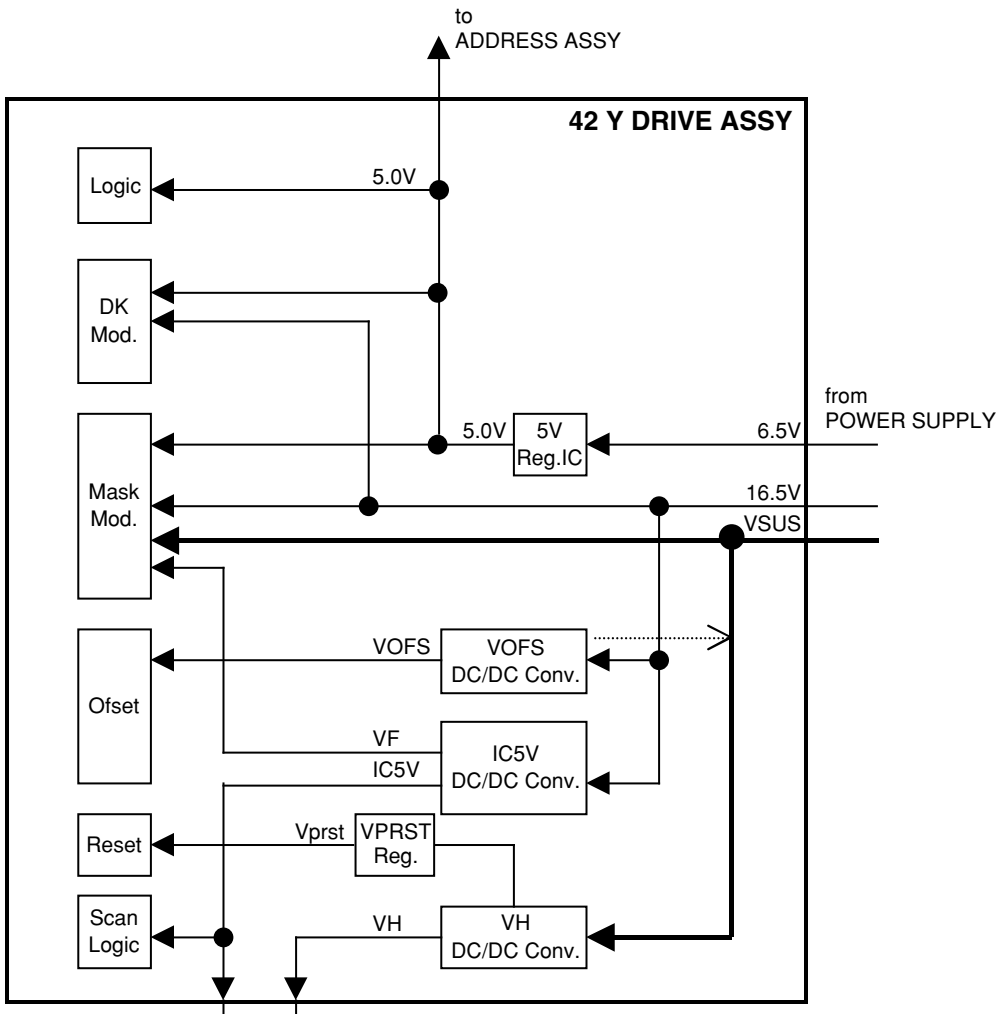

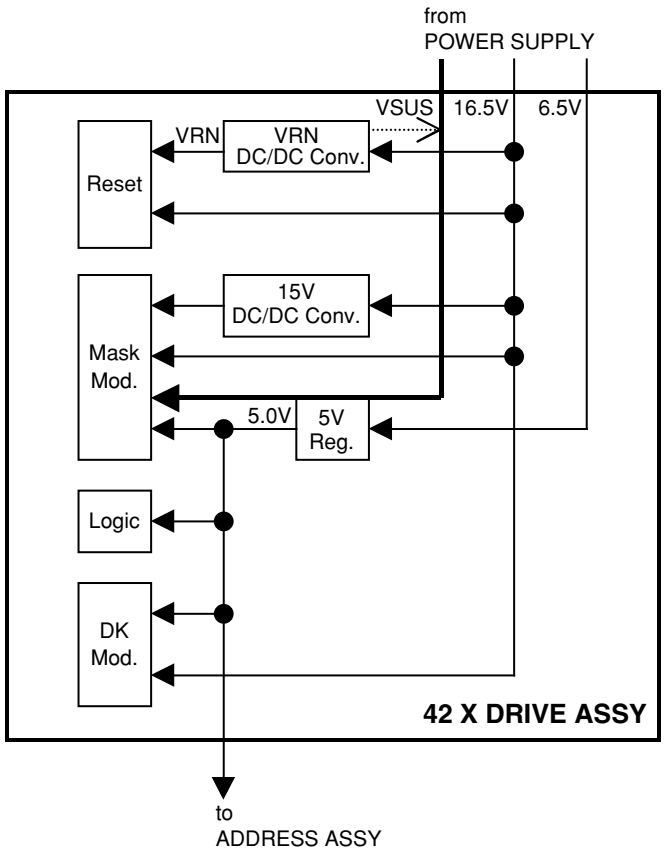

Note :
VOFS DC/DC converter and VPRST regulator are controled by electric volume.
The input of VOFS DC/DC converter and VRN DC/DC converter is 16.5 V, but they do not operate when Vsus is under 100 V.

4.9 42 SCAN A and 42 SCAN B ASSYS

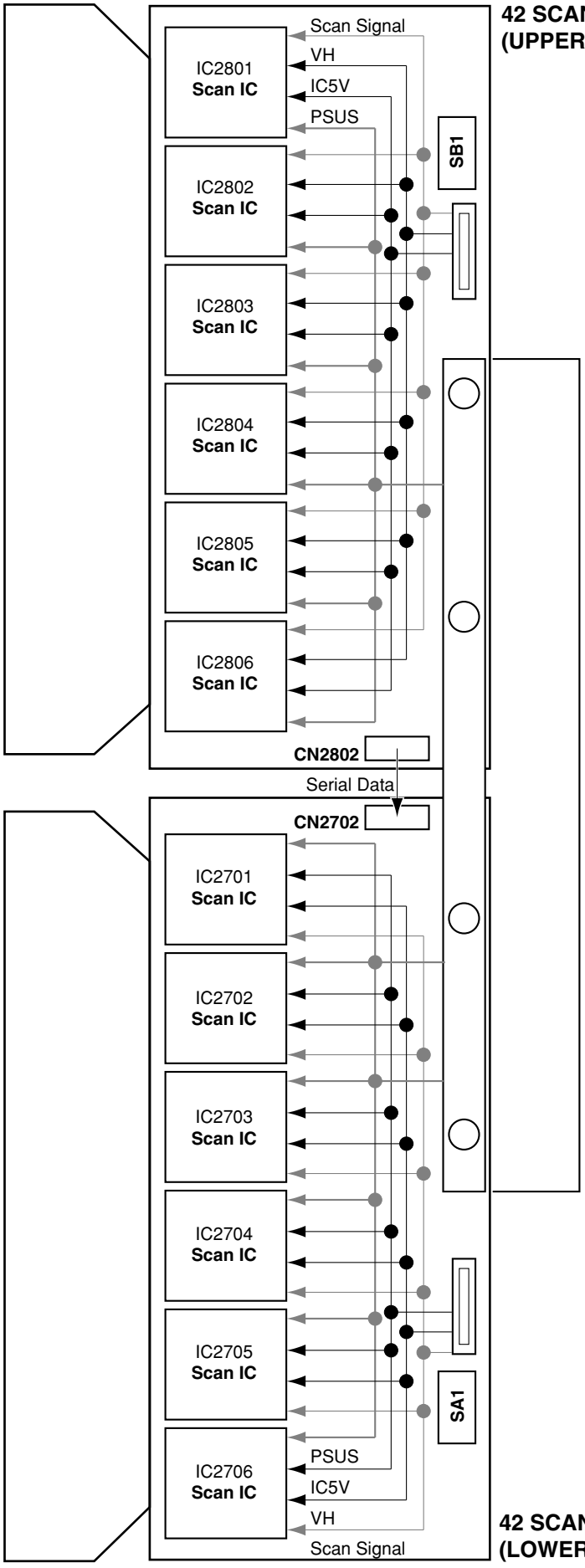

4.10 42 ADDRESS ASSY

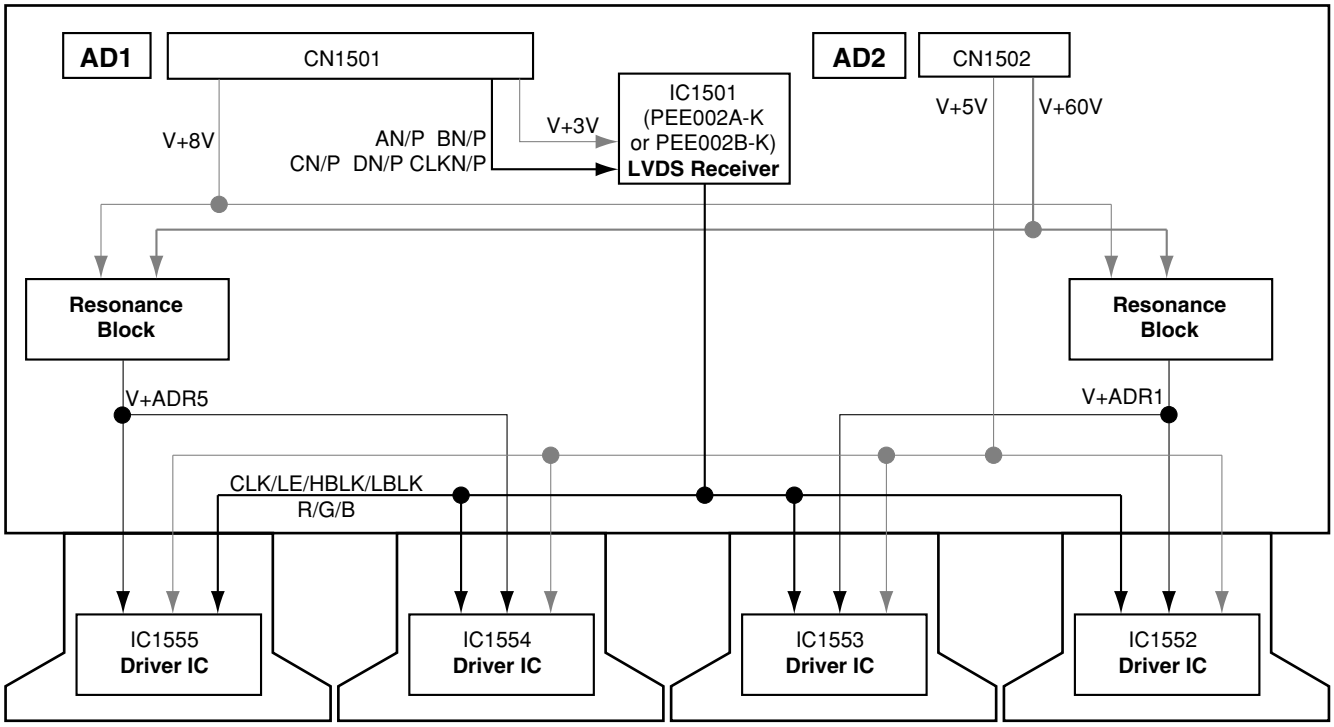

4.11 42 DIGITAL ASSY

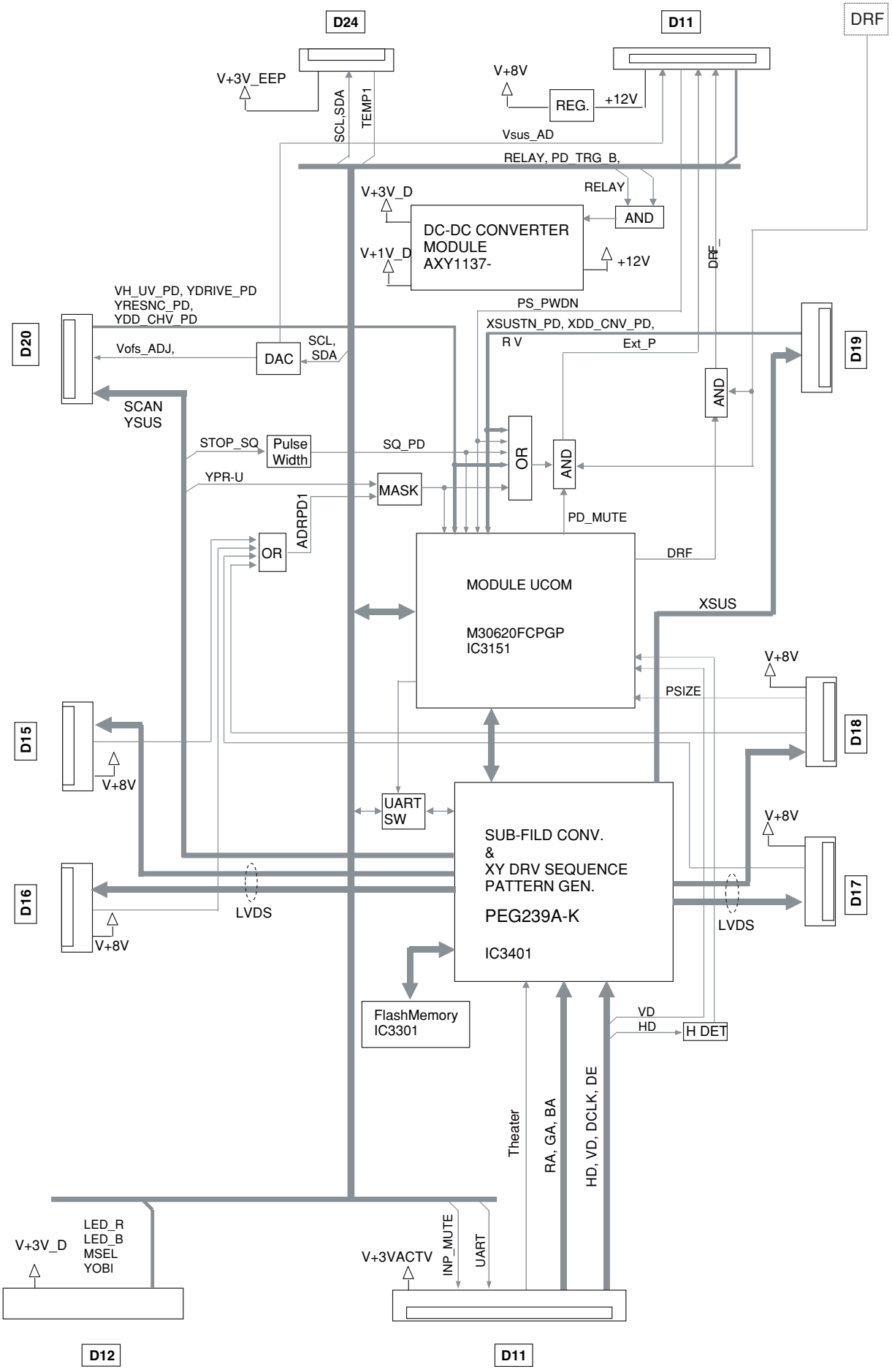

4.12 SIGNAL BLOCK DIAGRAM

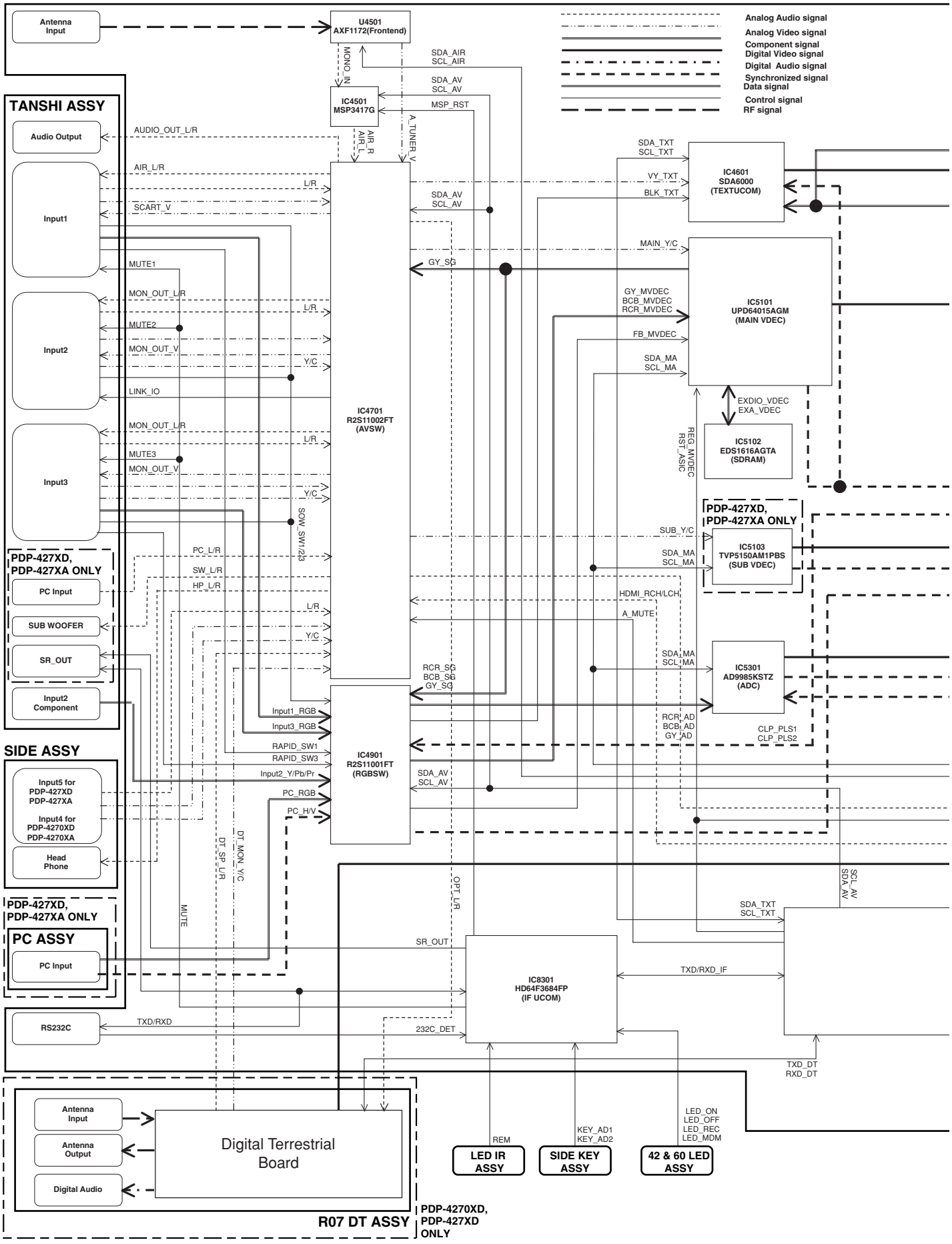

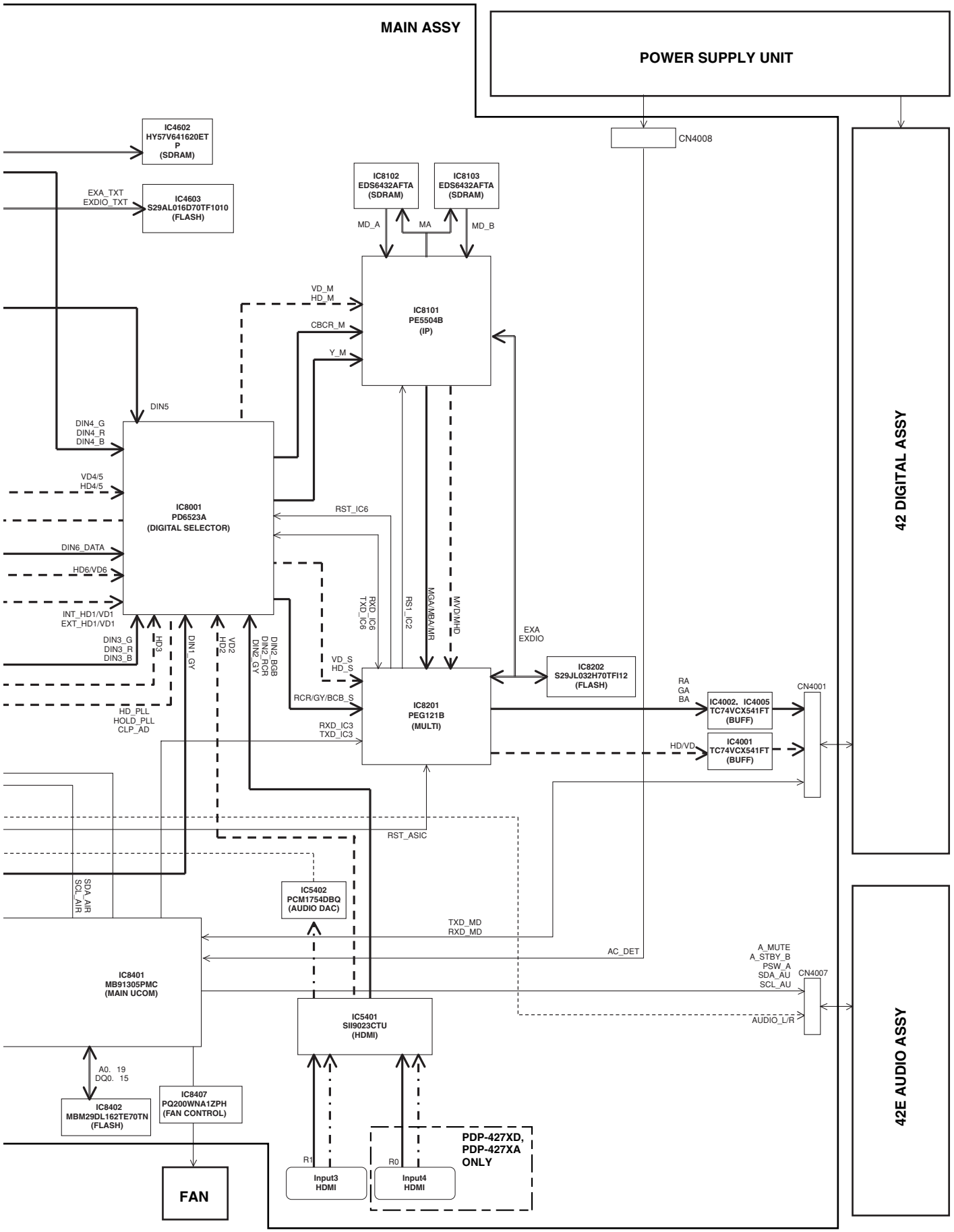
MAIN ASSY
POWER SUPPLY UNIT
CN4008
42 DIGITAL ASSY
42E AUDIO ASSY
IC4602
HY57V641620ET
P
(SDRAM)
EXA_TXT
EXDIO_TXT
IC4603
S29AL016D70TF1010
(FLASH)
IC8102
EDS6432AFTA
(SDRAM)
IC8103
EDS6432AFTA
(SDRAM)
MD_A
MA
MD_B
IC8101
PE5504B
(IP)
VD_M
HD_M
CBCR_M
Y_M
DIN5
DIN4_G
DIN4_R
DIN4_B
VD4/5
HD4/5
IC8001
PD6523A
(DIGITAL SELECTOR)
RST_IC6
DIN6_DATA
HD6/VD6
INT_HD1/VD1
EXT_HD1/VD1
DIN3_G
DIN3_R
DIN3_B
HD3
DIN1_GY
VD2
HD2
DIN2_BGB
DIN2_RCR
DIN2_GY
RXD_IC6
TXD_IC6
RS1_IC2
MGA/MBA/MR
MVD/MHD
EXA
EXDIO
VD_S
HD_S
RCR/GY/BCB_S
RXD_IC3
TXD_IC3
HD_PLL
HOLD_PLL
CLP_AD
IC8202
S29JL032H70TFI12
(FLASH)
RA
GA
BA
IC4002. IC4005
TC74VCX541FT
(BUFF)
IC4001
TC74VCX541FT
(BUFF)
CN4001
HD/VD
IC8201
PEG121B
(MULTI)
RST_ASIC
SDA_AIR
SCL_AIR
IC5402
PCM1754DBQ
(AUDIO DAC)
TXD_MD
RXD_MD
AC_DET
A_MUTE
A_STBY_B
PSW_A
SDA_AU
SCL_AU
CN4007
AUDIO_L/R
IC8401
MB91305PMC
(MAIN UCOM)
IC5401
SII9023CTU
(HDMI)
A0. 19
DQ0. 15
IC8402
MBM29DL162TE70TN
(FLASH)
IC8407
PQ200WNA1ZPH
(FAN CONTROL)
FAN
R1
R0
Input3
HDMI
Input4
HDMI
PDP-427XD,
PDP-427XA
ONLY

4.13 R07 DT ASSY (PDP-4270XD and PDP-427XD ONLY)

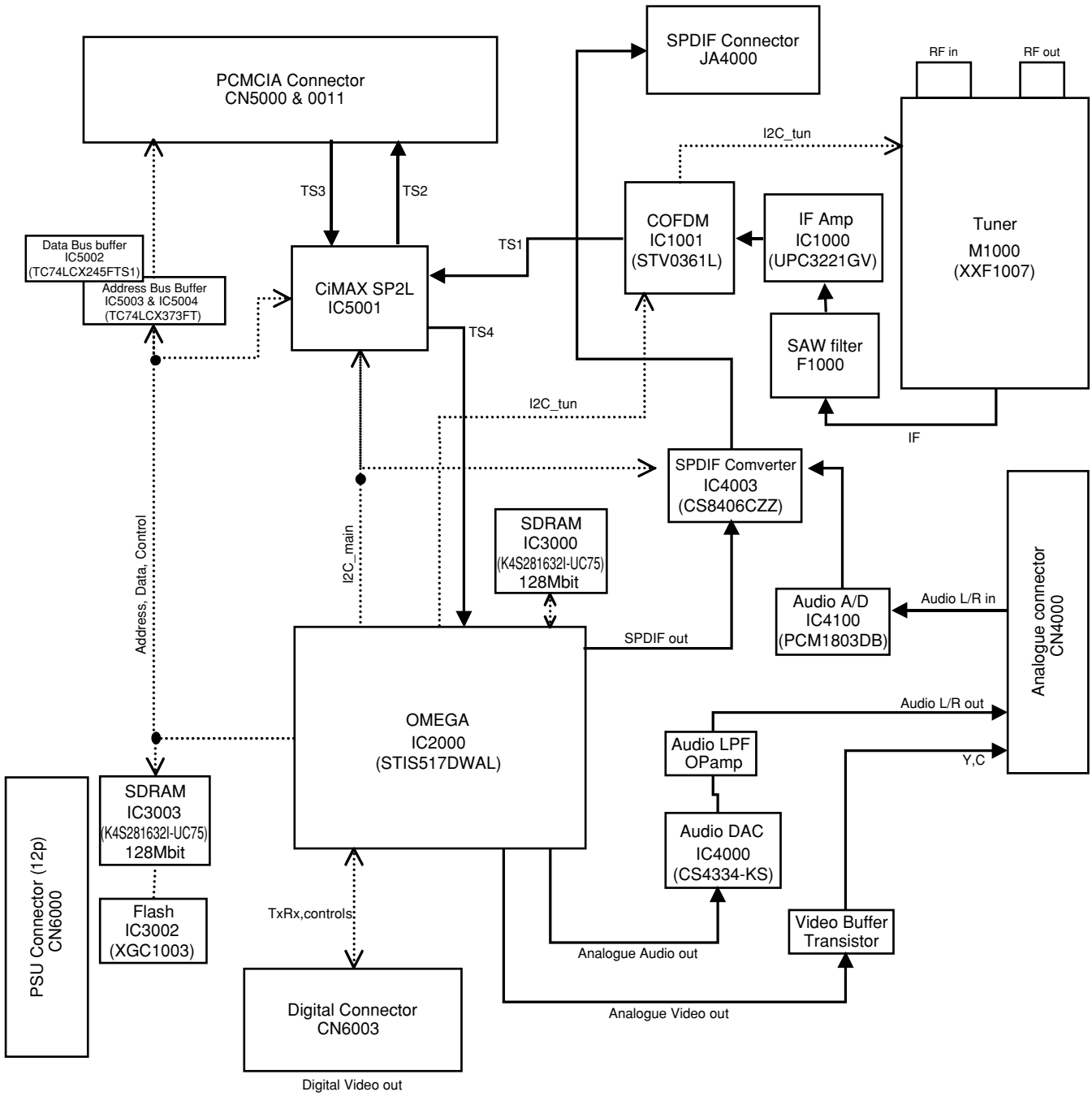

4.14 POWER SUPPLY BLOCK of MAIN ASSY

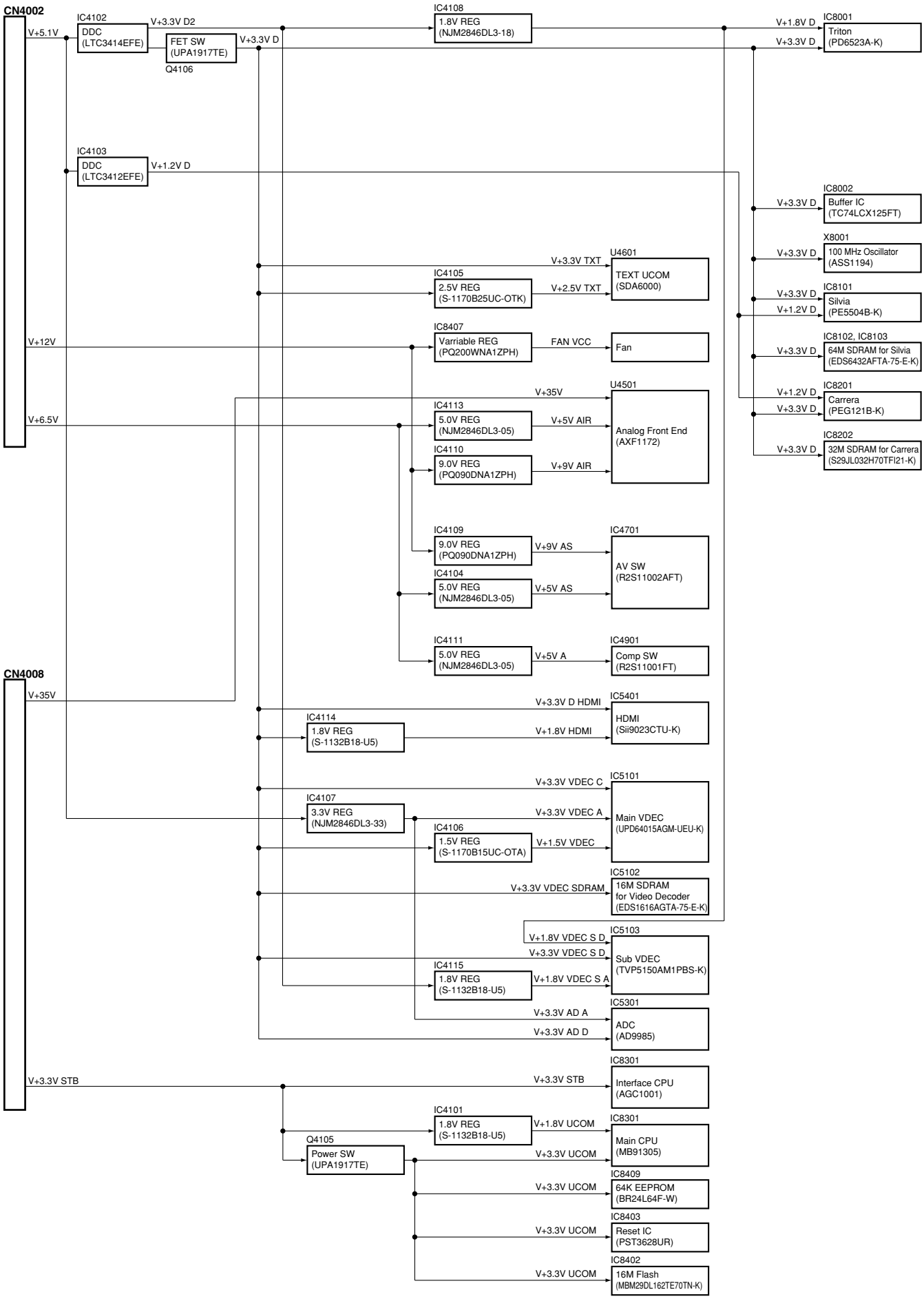

4.15 42E AUDIO ASSY

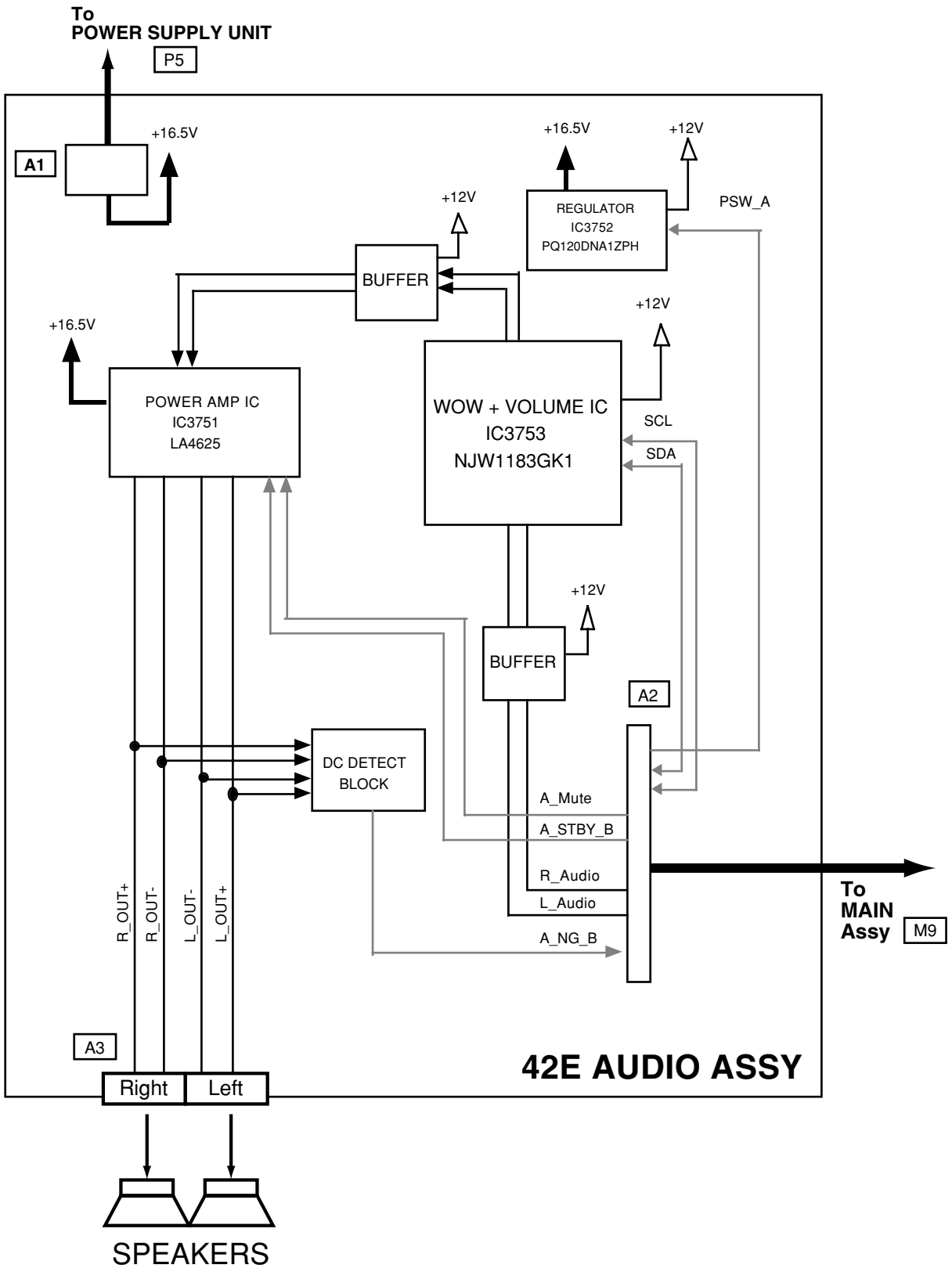

4.16 POWER SUPPLY BLOCK of 42E AUDIO, LED IR and SIDE KEY ASSYS

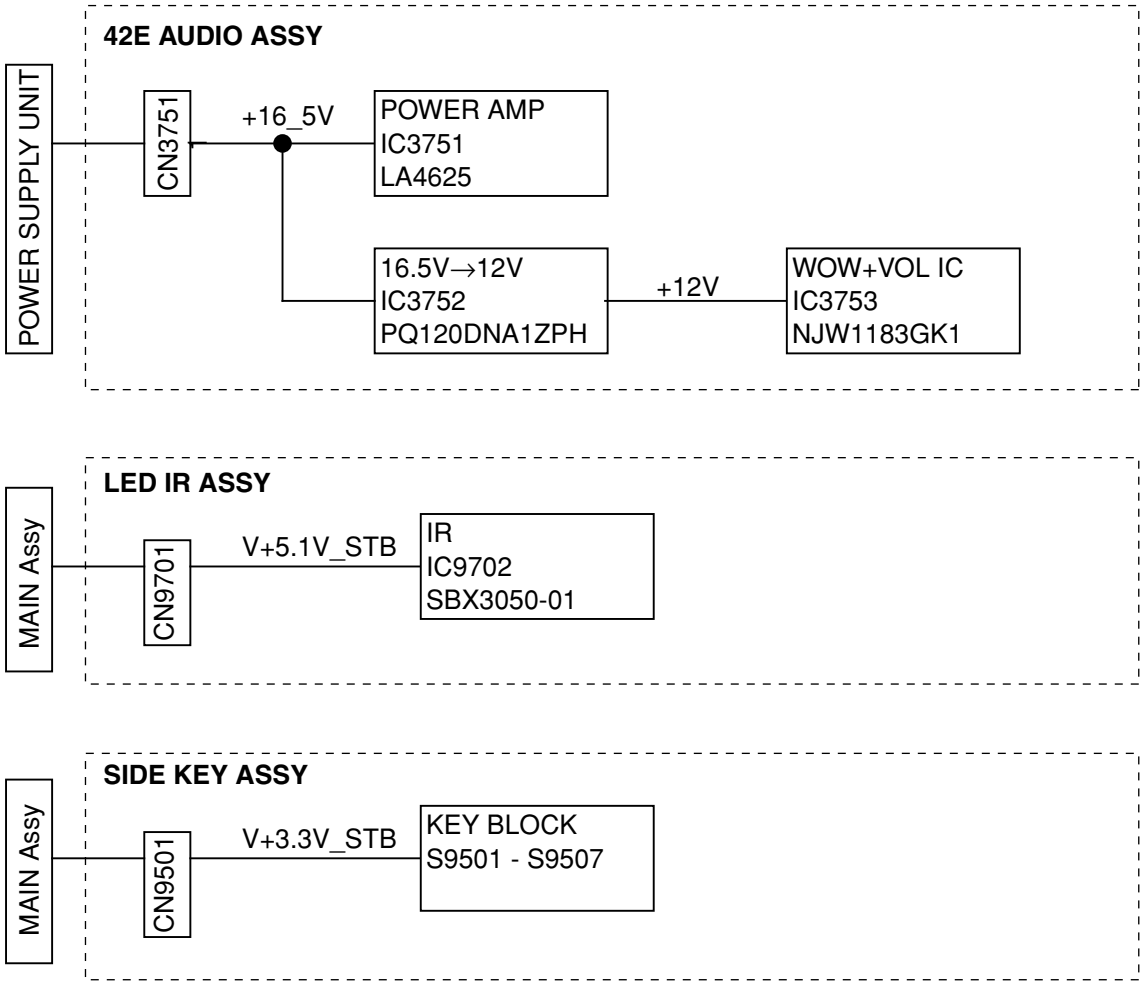

4.17 VOLTAGES

42 DIGITAL Assy **MAIN Assy**

CN3001 (AKM1353)		Voltage (V)	CN4001 (AKM1349)	
No.	Pin Name		Pin Name	No.
1	GND	0	GND	1
2	V_3.3V_UCOM	3.3	V_3.3V_UCOM	2
3	INP_MUTE	0	INP_MUTE	3
4	THEATER	0	THEATER	4
5	VD	0/3.3	VD	5
6	HD	0/3.3	HD	6
7	DE	0/3.3	DE	7
8	GND	0	GND	8
9	CLK	0/3.3	CLK	9
10	GND	0	GND	10
11	GND	0	GND	11
12	VIDEO_R9	0	VIDEO_R9	12
13	VIDEO_R8	0	VIDEO_R8	13
14	VIDEO_R7	0	VIDEO_R7	14
15	VIDEO_R6	0	VIDEO_R6	15
16	VIDEO_R5	0	VIDEO_R5	16
17	VIDEO_R4	0	VIDEO_R4	17
18	VIDEO_R3	0	VIDEO_R3	18
19	VIDEO_R2	0	VIDEO_R2	19
20	VIDEO_R1	0	VIDEO_R1	20
21	VIDEO_R0	0	VIDEO_R0	21
22	GND	0	GND	22
23	VIDEO_G9	0	VIDEO_G9	23
24	VIDEO_G8	0	VIDEO_G8	24
25	VIDEO_G7	0	VIDEO_G7	25
26	VIDEO_G6	0	VIDEO_G6	26
27	VIDEO_G5	0	VIDEO_G5	27
28	VIDEO_G4	0	VIDEO_G4	28
29	VIDEO_G3	0	VIDEO_G3	29
30	VIDEO_G2	0	VIDEO_G2	30
31	VIDEO_G1	0	VIDEO_G1	31
32	VIDEO_G0	0	VIDEO_G0	32
33	GND	0	GND	33
34	VIDEO_B9	0	VIDEO_B9	34
35	VIDEO_B8	0	VIDEO_B8	35
36	VIDEO_B7	0	VIDEO_B7	36
37	VIDEO_B6	0	VIDEO_B6	37
38	VIDEO_B5	0	VIDEO_B5	38
39	VIDEO_B4	0	VIDEO_B4	39
40	VIDEO_B3	0	VIDEO_B3	40
41	VIDEO_B2	0	VIDEO_B2	41
42	VIDEO_B1	0	VIDEO_B1	42
43	VIDEO_B0	0	VIDEO_B0	43
44	GND	0	GND	44
45	Reserve	0	Reserve	45
46	AC_OFF	0	AC_OFF	46
47	TXD_MD	3.3	TXD_MD	47
48	RXD_MD	3.3	RXD_MD	48
49	REQ_MD	0	REQ_MD	49
50	MODE	0	MODE	50

TANSHI Assy **MAIN Assy**

CN8802 (AKM1349)		Voltage (V)	CN4004 (AKM1349)	
No.	Pin Name		Pin Name	No.
1	Input3_G	2.4	Input3_G	50
2	GND	0	GND	49
3	Input3_B	2.4	Input3_B	48
4	GND	0	GND	47
5	Input3_R	2.4	Input3_R	46
6	GND	0	GND	45
7	Input1_G	2.4	Input1_G	44
8	GND	0	GND	43
9	Input1_B	2.4	Input1_B	42
10	GND	0	GND	41
11	Input1_R	2.4	Input1_R	40
12	GND	0	GND	39
13	RAPID_SW3	0	RAPID_SW3	38
14	RAPID_SW1	0	RAPID_SW1	37
15	GND	0	GND	36
16	LINK_IO3	4.9	LINK_IO3	35
17	GND	0	GND	34
18	LINK_IO2	4.9	LINK_IO2	33
19	SLOW_SW1	0	SLOW_SW1	32
20	SLOW_SW2	0	SLOW_SW2	31
21	SLOW_SW3	0	SLOW_SW3	30
22	IN2_CompY_PLUG	0	IN2_CompY_PLUG	29
23	GND	0	GND	28
24	Input2_Y	2.4	Input2_Y	27
25	GND	0	GND	26
26	Input2_Pb	2.4	Input2_Pb	25
27	GND	0	GND	24
28	Input2_Pr	2.4	Input2_Pr	23
29	GND	0	GND	22
30	Input3_V	0	Input3_V	21
31	GND	0	GND	20
32	Input3_SC	2.2	Input3_SC	19
33	GND	0	GND	18
34	Input2_V	0	Input2_V	17
35	GND	0	GND	16
36	Input2_SC	2.2	Input2_SC	15
37	GND	0	GND	14
38	Input1_V	2.6	Input1_V	13
39	GND	0	GND	12
40	AIR_OUT_V	3.4	AIR_OUT_V	11
41	GND	0	GND	10
42	SCART_OUT_V	3.6	SCART_OUT_V	9
43	GND	0	GND	8
44	Input1_Lch	4.5	Input1_Lch	7
45	GND	0	GND	6
46	Input1_Rch	4.5	Input1_Rch	5
47	GND	0	GND	4
48	Input2_Lch	4.5	Input2_Lch	3
49	GND	0	GND	2
50	Input2_Rch	4.5	Input2_Rch	1

TANSHI Assy **MAIN Assy**

CN9003 (AKM1349)		Voltage (V)	CN4005 (AKM1349)	
No.	Pin Name		Pin Name	No.
1	V+9V_A	9.1	V+9V_A	50
2	V+9V_AS	9	V+9V_AS	49
3	GND	0	GND	48
4	INPUT3_Lch	4.5	INPUT3_Lch	47
5	GND	0	GND	46
6	INPUT3_Rch	4.5	INPUT3_Rch	45
7	GND	0	GND	44
8	PC_Lch	4.5	PC_Lch	43
9	GND	0	GND	42
10	PC_Rch	4.5	PC_Rch	41
11	GND	0	GND	40
12	SIDE_Lch	4.5	SIDE_Lch	39
13	GND	0	GND	38
14	SIDE_Rch	4.5	SIDE_Rch	37
15	GND	0	GND	36
16	AIR_Lch	3.8	AIR_Lch	35
17	GND	0	GND	34
18	AIR_Rch	3.8	AIR_Rch	33
19	GND	0	GND	32
20	SCART_OUT_Lch	4.5	SCART_OUT_Lch	31
21	GND	0	GND	30
22	SCART_OUT_Rch	4.5	SCART_OUT_Rch	29
23	V+3_3V_STB	3.3	V+3_3V_STB	28
24	HP_L	4.5	HP_L	27
25	GND	0	GND	26
26	HP_R	4.5	HP_R	25
27	GND	0	GND	24
28	SIDE_PLUG	4.9	SIDE_PLUG	23
29	SIDE_V	2.5	SIDE_V	22
30	GND	0	GND	21
31	SIDE_SY	2.5	SIDE_SY	20
32	GND	0	GND	19
33	SIDE_S2	0.2	SIDE_S2	18
34	GND	0	GND	17
35	SIDE_SC	0	SIDE_SC	16
36	GND	0	GND	15
37	AUDIO_OUT_Lch	4.6	AUDIO_OUT_Lch	14
38	GND	0	GND	13
39	AUDIO_OUT_Rch	4.6	AUDIO_OUT_Rch	12
40	GND	0	GND	11
41	RXD_SR	3.2	RXD_SR	10
42	TXD_SR	3.2	TXD_SR	9
43	SR_OUT	5.0	SR_OUT	8
44	AC_SC3_MUTE	0	AC_SC3_MUTE	7
45	AC_SC2_MUTE	0	AC_SC2_MUTE	6
46	AC_SC1_MUTE	0	AC_SC1_MUTE	5
47	AC_AM_MUTE	0	AC_AM_MUTE	4
48	AC_HP_MUTE	0	AC_HP_MUTE	3
49	HP_PLUG	2.9	HP_PLUG	2
50	V+5V_A	5.0	V+5V_A	1

R07 DT Assy **MAIN Assy**

CN6003 (AKM1349)		Voltage (V)	CN4013 (AKM1353)	
No.	Pin Name		Pin Name	No.
1	GND	0	GND	50
2	RXDA (TXD_DT)	3.3	TXD_DT (RXDA)	49
3	TXDA (RXD_DT)	3.3	RXD_DT (TXDA)	48
4	GND	0	GND	47
5	DT_FNC	3.3	DT_FNC	46
6	GND	0	GND	45
7	CLK_DT	0 to 3.3	CLK_DT	44
8	GND	0	GND	43
9	DVID_CrCb [7] (Y7_DT)	0 to 3.3	Y7_DT (DVID_CrCb [7])	42
10	DVID_CrCb [6] (Y6_DT)	0 to 3.3	Y6_DT (DVID_CrCb [6])	41
11	GND	0	GND	40
12	DVID_CrCb [5] (Y5_DT)	0 to 3.3	Y5_DT (DVID_CrCb [5])	39
13	DVID_CrCb [4] (Y4_DT)	0 to 3.3	Y4_DT (DVID_CrCb [4])	38
14	GND	0	GND	37
15	DVID_CrCb [3] (Y3_DT)	0 to 3.3	Y3_DT (DVID_CrCb [3])	36
16	DVID_CrCb [2] (Y2_DT)	0 to 3.3	Y2_DT (DVID_CrCb [2])	35
17	GND	0	GND	34
18	DVID_CrCb [1] (Y1_DT)	0 to 3.3	Y1_DT (DVID_CrCb [1])	33
19	DVID_CrCb [0] (Y0_DT)	0 to 3.3	Y0_DT (DVID_CrCb [0])	32
20	GND	0	GND	31
21	NC	0	CB7_DT	30
22	NC	0	CB6_DT	29
23	GND	0	GND	28
24	GND	0	CB5_DT	27
25	GND	0	CB4_DT	26
26	GND	0	GND	25
27	GND	0	CB3_DT	24
28	GND	0	CB2_DT	23
29	GND	0	GND	22
30	GND	0	CB1_DT	21
31	GND	0	CB0_DT	20
32	GND	0	GND	19
33	GND	0	CR7_DT	18
34	GND	0	CR6_DT	17
35	GND	0	GND	16
36	GND	0	CR5_DT	15
37	GND	0	CR4_DT	14
38	GND	0	GND	13
39	GND	0	CR3_DT	12
40	GND	0	CR2_DT	11
41	GND	0	GND	10
42	GND	0	CR1_DT	9
43	GND	0	CR0_DT	8
44	GND	0	GND	7
45	DE_DT	0	DE_DT	6
46	GND	0	GND	5
47	VD_DT	3.3	VD_DT	4
48	GND	0	GND	3
49	HD_DT	3.3	HD_DT	2
50	GND	0	GND	1

R07 DT Assy — **MAIN Assy**

CN4000 (AKM1348)		Voltage (V)	CN4014 (AKM1354)	
No.	Pin Name		Pin Name	No.
1	GND	0	GND	40
2	GND	0	GND	39
3	GND	0	GND	38
4	GND	0	GND	37
5	GND	0	GND	36
6	GND	0	GND	35
7	DT_SP_R	0	DT_SP_R	34
8	GND	0	GND	33
9	DT_SP_L	0	DT_SP_L	32
10	GND	0	GND	31
11	OPT_R	0	OPT_R	30
12	GND	0	GND	29
13	OPT_L	0	OPT_L	28
14	GND	0	GND	27
15	DT_MON_C	1.7	DT_MON_C	26
16	GND	0	GND	25
17	GND	0	GND	24
18	DT_MON_Y	1.7	DT_MON_Y	23
19	GND	0	GND	22
20	GND	0	GND	21
21	GND	0	GND	20
22	GND	0	GND	19
23	GND	0	GND	18
24	GND	0	GND	17
25	GND	0	GND	16
26	GND	0	GND	15
27	NOT_USE	0	NC	14
28	GND	0	GND	13
29	GND	0	GND	12
30	NOT_USE	0	NC	11
31	GND	0	GND	10
32	GND	0	GND	9
33	NOT_USE	0	NC	8
34	GND	0	GND	7
35	GND	0	GND	6
36	ANT_POW_EU	0	ANT_POW_EU	5
37	POW_DET	0	POW_DET	4
38	RST_DT	3.3	RST_DT	3
39	DT_DET	0	DT_DET	2
40	GND	0	GND	1

R07 DT Assy — **MAIN Assy**

CN6000 (AKM1298)		Voltage (V)	CN4017 (KM200NA12)	
No.	Pin Name		Pin Name	No.
1	V+35V	37.0	V+35V	12
2	GND	0	GND	11
3	NC	0	NC	10
4	GND	0	GND	9
5	V+12V	11.8	V+12V	8
6	GND	0	GND	7
7	V+6_5V	6.7	V+6_5V	6
8	V+5_1V_STB	5.1	V+5_1V_STB	5
9	V+5_1V	5.0	V+5_1V	4
10	V+5_1V	5.0	V+5_1V	3
11	GND	0	GND	2
12	V+3_3V_STB	3.4	V+3_3V_STB	1

42E AUDIO Assy — **MAIN Assy**

CN3752 (KM200NA11)		Voltage (V)	CN4007 (KM200NA11)	
No.	Pin Name		Pin Name	No.
11	PSW_A	2.8	PSW_A	11
10	SDA_AU	3.4	SDA_AU	10
9	SCL_AU	3.4	SCL_AU	9
8	A_MUTE	0	A_MUTE	8
7	A_STBY_B	3.4	A_STBY_B	7
6	GND	0	GND	6
5	AUDIO_R	0	AUDIO_R	5
4	GND	0	GND	4
3	AUDIO_L	0	AUDIO_L	3
2	GND	0	GND	2
1	A_NG_B	2.8	A_NG_B	1

AUDIO — **MAIN Assy**

		Voltage (V)	CN4015 (B3P-VH)	
No.	Pin Name		Pin Name	No.
		17.2	V+16_5V	1
		0	GND	2
		0	GND	3

DVI JIG — **MAIN Assy**

		Voltage (V)	CN4011 (AKM1274)	
No.	Pin Name		Pin Name	No.
		0	GND	1
		3.4	V+3_3V_STB	2
		6.5	V+6_5V	3

MAIN Assy

		Voltage (V)	CN4010 (KM200NA7)	
No.	Pin Name		Pin Name	No.
2	REM	0	REM	7
6	GND	0	GND	6
1	V+5_1V_STB	5.0	V+5_1V_STB	5
4	V+3_3V_STB	3.4	V+3_3V_STB	4
3	KEY_AD1	3.4	KEY_AD1	3
2	KEY_AD2	3.4	KEY_AD2	2
1	GND	0	GND	1

LED IR Assy CN9701 (AKP1303)

SIDE KEY Assy CN9501 (KM200NA4L)

POWER SUPPLY Unit **MAIN Assy**

P8 (B13B-PH-K-S)		Voltage (V)	CN4002 (KM200NA13)	
No.	Pin Name		Pin Name	No.
1	V+6_5V	6.6	V+6_5V	1
2	GND	0	GND	2
3	V+12V	12.1	V+12V	3
4	GND	0	GND	4
5	+16.5V	17.2	V+16.5V	5
6	GND	0	GND	6
7	+5_1V	4.9	V+5_1V	7
8	+5_1V	4.9	V+5_1V	8
9	+5_1V	4.9	V+5_1V	9
10	+5_1V	4.9	V+5_1V	10
11	GND-D	0	GND	11
12	GND-D	0	GND	12
13	GND-D	0	GND	13

POWER SUPPLY Unit **MAIN Assy**

P9 (B11B-PH-K-S)		Voltage (V)	CN4008 (KM200NA11)	
No.	Pin Name		Pin Name	No.
1	M-SW-DET	3.4	N.C.	1
2	AC-DET	3.4	AC_DET	2
3	N.C.	3.4	RELAY	3
4	GND-D	0	GND	4
5	STB3_3V	3.4	V+3_3V_STB	5
6	GND-D	0	GND	6
7	STBY5_1V	5.0	V+5_1V_STB	7
8	GND-D	0	GND	8
9	+35V	35.0	V+35V	9
10	GND-D	0	GND	10
11	US-SW	0	US_SW	11

Fan **MAIN Assy**

		Voltage (V)	CN4009 (KM200NA3)	
No.	Pin Name		Pin Name	No.
		0	FAN_VCC	1
		3.4	FAN_NG1	2
		0	GND	3

PC Assy **MAIN Assy**

CN9301 (CKS3826)		Voltage (V)	CN4018 (AKM1234)	
No.	Pin Name		Pin Name	No.
1	V+5V_A	5.0	V+5V_A	12
2	WE ROM	0	WE ROM	11
3	D-sub DET	0	D-sub DET	10
4	V+3.3V_UCOM	3.3	V+3.3V_UCOM	9
5	PC_V	0	PC_V	8
6	PC_H	0	PC_H	7
7	V+9V_A	9.0	V+9V_A	6
8	PC_G	2.4	PC_G	5
9	GND	0	GND	4
10	PC_B	2.4	PC_B	3
11	GND	0	GND	2
12	PC_R	2.4	PC_R	1

42 & 60 LED Assy **MAIN Assy**

CN9601 (AKP1303)		Voltage (V)	CN4006 (KM200NA6)	
No.	Pin Name		Pin Name	No.
1	LED-	0.2	LED-	1
2	LED_ON	3.4	LED_ON	2
3	LED_OFF	0	LED_OFF	3
4	LED_REC	0	LED_REC	4
5	LED_MDM	0	LED_MDM	5
6	LED-	0.2	LED-	6

42 DIGITAL Assy CN3505 (D19) ↔ 42 X DRIVE Assy CN1001 (X1)

Pin No.	Pin Name	I/O	Function	Voltage (V)	TP
1	PSW	O	Function standby control signal	0	TP3519
2	XSUS_PD	I	X drive PD signal	0	TP3513
3	XDD_PD	I	X drive PD signal	0	TP3514
4	XDRV_PD	I	X drive PD signal	0	TP3515
5	GND	–	GND	–	–
6	XRsv1	I	X drive control signal (reserve)	–	–
7	XSUS-MSK	I	X drive control signal	0 to 3.3	–
8	GND	–	GND	–	–
9	XNR-D	O	X drive control signal	0 to 3.3	–
10	GND	–	GND	–	–
11	XSUS-G	O	X drive control signal	0 to 3.3	–
12	GND	–	GND	–	–
13	XSUS-D	O	X drive control signal	0 to 3.3	–
14	GND	–	GND	–	–
15	XSUS-U	O	X drive control signal	0 to 3.3	–
16	GND	–	GND	–	–
17	XSUS-B	O	X drive control signal	0 to 3.3	–
18	GND	–	GND	–	–

42 DIGITAL Assy CN3506 (D20) ↔ 42 Y DRIVE Assy CN2001 (Y1)

Pin No.	Pin Name	I/O	Function	Voltage (V)	TP
1	GND	–	GND	–	–
2	SCN5V_PD	I	Y drive PD signal	0	TP3507
3	SI_L	O	Scan control signal	0 to 3.3	–
4	SI_H	O	Scan control signal	0 to 3.3	–
5	GND	–	GND	–	–
6	CLR	O	Scan control signal	0 to 3.3	–
7	CLK	O	Scan control signal	0 to 3.3	–
8	GND	–	GND	–	–
9	LE	O	Scan control signal	0 to 3.3	–
10	OC2	O	Scan control signal	0 to 3.3	–
11	OC1 (–1)	O	Scan control signal	0 to 3.3	–
12	GND	–	GND	–	–
13	YSUS-B	O	Y drive control signal	0 to 3.3	–
14	YSUS-U	O	Y drive control signal	0 to 3.3	–
15	GND	–	GND	–	–
16	YSUS-D	O	Y drive control signal	0 to 3.3	–
17	YSUS-G	O	Y drive control signal	0 to 3.3	–
18	GND	–	GND	–	–
19	YPR-U	O	Y drive control signal	0 to 3.3	–
20	YRsv1	–	Y drive control signal (reserve)	–	–
21	GND	–	GND	–	–
22	YSUS-MSK	O	Y drive control signal	0 to 3.3	–
23	YNRST	O	Y drive control signal	0 to 3.3	–
24	YRsv2	–	Y drive control signal (reserve)	–	–
25	GND	–	GND	–	–
26	YENOFS	O	Y drive control signal	0 to 3.3	–
27	YRsv3	O	Y drive control signal (reserve)	–	–
28	YSOFT-D	O	Y drive control signal	0 to 3.3	–
29	GND	–	GND	–	–
30	VOFS_ADJ	–	Vofs offset adjustment	1.85	TP3181
31	VYPRST_ADJ	O	Reset voltage adjustment	1.21	TP3182
32	GND	–	GND	–	–
33	GND	–	GND	–	–
34	N.C	–	Non connection	–	–
35	GND	–	GND	–	–
36	YDD_PD	I	Y drive PD signal	0	TP3509
37	YSUS_PD	I	Y drive PD signal	0	TP3510
38	SCAN_PD	I	Y drive PD signal	0	TP3511
39	YDRV_PD	I	Y drive PD signal	0	TP3512
40	PSW	O	Function standby control signal	0	TP3518

42 DIGITAL Assy CN3501 (D15) ↔ 42 ADDRESS Assy CN1501 (AD1)

Pin No.	Pin Name	I/O	Function	Voltage (V)	TP
1	N.C	–	Non connection	–	–
2	ADR_PD	I	Address PD signal	0 to 4	TP3501
3	N.C	–	Non connection	–	–
4	GND	–	GND	–	–
5	V+8V	O	+8 V power supply	8	TP3618
6	V+8V	O	+8 V power supply	8	TP3618
7	GND	–	GND	–	–
8	GND	–	GND	–	–
9	N.C	–	Non connection	–	–
10	TA–	O	LVDS data	1 to 1.4	–
11	TA+	O	LVDS data	1 to 1.4	–
12	N.C	–	Non connection	–	–
13	GND	–	GND	–	–
14	N.C	–	Non connection	–	–
15	TB–	O	LVDS data	1 to 1.4	–
16	TB+	O	LVDS data	1 to 1.4	–
17	N.C	–	Non connection	–	–
18	GND	–	GND	–	–
19	N.C	–	Non connection	–	–
20	TC–	O	LVDS data	1 to 1.4	–
21	TC+	O	LVDS data	1 to 1.4	–
22	N.C	–	Non connection	–	–
23	GND	–	GND	–	–
24	N.C	–	Non connection	–	–
25	TCLK–	O	LVDS data	1 to 1.4	–
26	TCLK+	O	LVDS data	1 to 1.4	–
27	N.C	–	Non connection	–	–
28	GND	–	GND	–	–
29	N.C	–	Non connection	–	–
30	TD–	O	LVDS data	1 to 1.4	–
31	TD+	O	LVDS data	1 to 1.4	–
32	N.C	–	Non connection	–	–
33	GND	–	GND	–	–
34	GND	–	GND	–	–
35	V+3V_D	O	+3 V power supply	3.3	TP3607
36	V+3V_D	O	+3 V power supply	3.3	TP3607
37	GND	–	GND	–	–
38	ADRS_3	O	Output timing control	0	–
39	ADRS_2	O	Output timing control	0	–
40	GND	–	GND	–	–

42 DIGITAL Assy CN3502 (D16) ↔ 42 ADDRESS Assy CN1501 (AD1)

Pin No.	Pin Name	I/O	Function	Voltage (V)	TP
1	N.C	–	Non connection	–	–
2	ADR_PD	I	Address PD signal	0 to 4	TP3502
3	N.C	–	Non connection	–	–
4	GND	–	GND	–	–
5	V+8V	O	+8 V power supply	8	TP3618
6	V+8V	O	+8 V power supply	8	TP3618
7	GND	–	GND	–	–
8	GND	–	GND	–	–
9	N.C	–	Non connection	–	–
10	TA–	O	LVDS data	1 to 1.4	–
11	TA+	O	LVDS data	1 to 1.4	–
12	N.C	–	Non connection	–	–
13	GND	–	GND	–	–
14	N.C	–	Non connection	–	–
15	TB–	O	LVDS data	1 to 1.4	–
16	TB+	O	LVDS data	1 to 1.4	–
17	N.C	–	Non connection	–	–
18	GND	–	GND	–	–
19	N.C	–	Non connection	–	–
20	TC–	O	LVDS data	1 to 1.4	–
21	TC+	O	LVDS data	1 to 1.4	–
22	N.C	–	Non connection	–	–
23	GND	–	GND	–	–
24	N.C	–	Non connection	–	–
25	TCLK–	O	LVDS data	1 to 1.4	–
26	TCLK+	O	LVDS data	1 to 1.4	–
27	N.C	–	Non connection	–	–
28	GND	–	GND	–	–
29	N.C	–	Non connection	–	–
30	TD–	O	LVDS data	1 to 1.4	–
31	TD+	O	LVDS data	1 to 1.4	–
32	N.C	–	Non connection	–	–
33	GND	–	GND	–	–
34	GND	–	GND	–	–
35	V+3V_D	O	+3 V power supply	3.3	TP3607
36	V+3V_D	O	+3 V power supply	3.3	TP3607
37	GND	–	GND	–	–
38	ADRS_3	O	Output timing control	0	–
39	ADRS_2	O	Output timing control	0	–
40	GND	–	GND	–	–

42 DIGITAL Assy CN3503 (D17) ↔ 42 ADDRESS Assy CN1501 (AD1)

Pin No.	Pin Name	I/O	Function	Voltage (V)	TP
1	N.C	–	Non connection	–	–
2	ADR_PD	I	Address PD signal	0 to 4	TP3503
3	N.C	–	Non connection	–	–
4	GND	–	GND	–	–
5	V+8V	O	+8 V power supply	8	TP3618
6	V+8V	O	+8 V power supply	8	TP3618
7	GND	–	GND	–	–
8	GND	–	GND	–	–
9	N.C	–	Non connection	–	–
10	TA–	O	LVDS data	1 to 1.4	–
11	TA+	O	LVDS data	1 to 1.4	–
12	N.C	–	Non connection	–	–
13	GND	–	GND	–	–
14	N.C	–	Non connection	–	–
15	TB–	O	LVDS data	1 to 1.4	–
16	TB+	O	LVDS data	1 to 1.4	–
17	N.C	–	Non connection	–	–
18	GND	–	GND	–	–
19	N.C	–	Non connection	–	–
20	TC–	O	LVDS data	1 to 1.4	–
21	TC+	O	LVDS data	1 to 1.4	–
22	N.C	–	Non connection	–	–
23	GND	–	GND	–	–
24	N.C	–	Non connection	–	–
25	TCLK–	O	LVDS data	1 to 1.4	–
26	TCLK+	O	LVDS data	1 to 1.4	–
27	N.C	–	Non connection	–	–
28	GND	–	GND	–	–
29	N.C	–	Non connection	–	–
30	TD–	O	LVDS data	1 to 1.4	–
31	TD+	O	LVDS data	1 to 1.4	–
32	N.C	–	Non connection	–	–
33	GND	–	GND	–	–
34	GND	–	GND	–	–
35	V+3V_D	O	+3 V power supply	3.3	TP3607
36	V+3V_D	O	+3 V power supply	3.3	TP3607
37	GND	–	GND	–	–
38	ADRS_3	O	Output timing control	0	–
39	ADRS_2	O	Output timing control	0	–
40	GND	–	GND	–	–

42 DIGITAL Assy CN3504 (D18) ↔ 42 ADDRESS Assy CN1501 (AD1)

Pin No.	Pin Name	I/O	Function	Voltage (V)	TP
1	N.C	–	Non connection	–	–
2	ADR_PD	I	Address PD signal	0 to 4	TP3504
3	PSIZE	I	Panel size judge signal	3.3	–
4	GND	–	GND	–	–
5	V+8V	O	+8 V power supply	8	TP3618
6	V+8V	O	+8 V power supply	8	TP3618
7	GND	–	GND	–	–
8	GND	–	GND	–	–
9	N.C	–	Non connection	–	–
10	TA–	O	LVDS data	1 to 1.4	–
11	TA+	O	LVDS data	1 to 1.4	–
12	N.C	–	Non connection	–	–
13	GND	–	GND	–	–
14	N.C	–	Non connection	–	–
15	TB–	O	LVDS data	1 to 1.4	–
16	TB+	O	LVDS data	1 to 1.4	–
17	N.C	–	Non connection	–	–
18	GND	–	GND	–	–
19	N.C	–	Non connection	–	–
20	TC–	O	LVDS data	1 to 1.4	–
21	TC+	O	LVDS data	1 to 1.4	–
22	N.C	–	Non connection	–	–
23	GND	–	GND	–	–
24	N.C	–	Non connection	–	–
25	TCLK–	O	LVDS data	1 to 1.4	–
26	TCLK+	O	LVDS data	1 to 1.4	–
27	N.C	–	Non connection	–	–
28	GND	–	GND	–	–
29	N.C	–	Non connection	–	–
30	TD–	O	LVDS data	1 to 1.4	–
31	TD+	O	LVDS data	1 to 1.4	–
32	N.C	–	Non connection	–	–
33	GND	–	GND	–	–
34	GND	–	GND	–	–
35	V+3V_D	O	+3 V power supply	3.3	TP3607
36	V+3V_D	O	+3 V power supply	3.3	TP3607
37	GND	–	GND	–	–
38	ADRS_3	O	Output timing control	0	–
39	ADRS_2	O	Output timing control	0	–
40	GND	–	GND	–	–

42 DIGITAL Assy CN3002 (D12) ↔ Reserve (Non connection)

Pin No.	Pin Name	I/O	Function	Voltage (V)	TP
1	V+3V_D	O	+3.3 V power supply output	3.3	–
2	V+3V_D	O	+3.3 V power supply output	3.3	–
3	V+3V_D	O	+3.3 V power supply output	3.3	–
4	GND_D	–	GND	–	–
5	GND_D	–	GND	–	–
6	GND_D	–	GND	–	–
7	LED_R	O	Red LED control output	0 to 3.3	–
8	LED_B	O	Blue LED control output	0 to 3.3	–
9	MSEL	I	Control select	0 to 3.3	–
10	PBF	I	Panel type judge	0 to 3.3	–
11	NC	I	Non connection	–	–
12	YOBI0	I	Reserve input	0 to 3.3	–
13	YOBI1	I	Reserve input	0 to 3.3	–
14	YOBI2	I	Reserve input	0 to 3.3	–
15	YOBI3	I	Reserve input	0 to 3.3	–
16	YOBI4	I	Reserve input	0 to 3.3	–
17	NC	I	Non connection	–	–
18	NC	I	Non connection	–	–
19	V+3V_STB	O	STB 3.3 V power supply output	3.3	–
20	GND_D	–	GND	–	–

42 DIGITAL Assy CN3151 (D24) ↔ SENSOR Assy CN3651 (TE1)

Pin No.	Pin Name	I/O	Function	Voltage (V)	TP
1	V+3.3V_EEP	O	Power supply output for memory	3.3	–
2	E_SCL	O	IIC communication clock signal	0 to 3.3	–
3	E_SDA	O	IIC communication data signal	0 to 3.3	–
4	TEMP1	I	Panel temperature sensor signal	0 to 3.3	–
5	GND	–	GND	–	–

42 DIGITAL Assy CN3601 (D21) ↔ POWER SUPPLY Unit (P4)

Pin No.	Pin Name	I/O	Function	Voltage (V)	TP
1	V+12V	I	+12 V power supply input	12	–
2	V+12V	I	+12 V power supply input	12	–
3	GND	–	GND	–	–
4	GND	–	GND	–	–
5	V+3.3V_STB	I	STB3.3 V power supply input	0 to 3.3	–
6	GND	–	GND	–	–
7	M_SW_DET	I	Mechanism switch detection signal input	0 to 3.3	–
8	EXT_PD	O	Power down signal	0 to 3.3	–
9	VSUS_ADJ	O	VSUS power supply adjustment signal	0 to 3.3	–
10	PS_PD	I	Power supply PD signal	0 to 3.3	–
11	RELAY	O	Relay control	0 to 3.3	–
12	DRF_B	O	Large power supply ON/OFF control signal	0 to 3.3	–
13	AC_DET	I	AC power supply state input	0 to 3.3	–
14	PD_TRG_B	I	Power down trigger signal	0 to 3.3	–

■ Pin Function

42E AUDIO Assy CN3752 (A2) ↔ MAIN Assy CN4007 (M9)

Pin No.	Pin Name	I/O	Function	Remarks
1	A_NG_B	O	DC detection, disconnection of cable detection	L : Abnormal, H : Normal
2	GND	–	GND for small signal	–
3	AUDIO_L	I	Small signal L ch	–
4	GND	–	GND for small signal	–
5	AUDIO_R	I	Small signal R ch	–
6	GND	–	GND for small signal	–
7	A_STBY_B	I	MUTE ON/OFF signal for LA4625 IC internal circuit	L : Standby, H : ON
8	A_MUTE	I	MUTE ON/OFF signal for LA4625 IC external circuit	L : MUTE OFF, H : MUTE
9	SCL_AU	I	CLK of I2C for NJW1183GK1 IC	–
10	SDA_AU	I/O	DATA of I2C for NJW1183GK1 IC	–
11	PSW_A	I	ON/OFF switch for 12 V regulator IC	L : OFF, H : ON

42E AUDIO Assy CN3751 (A1) ↔ POWER SUPPLY Unit (P5)

Pin No.	Pin Name	I/O	Function	Remarks
1	+16.5V	–	Power supply (16.5 V) for LA4625 IC	–
2	GND_D	–	Return GND for LA4625 IC	–
3	GND_D	–	Return GND for LA4625 IC	–

42E AUDIO Assy CN3753 (A3) ↔ Speaker

Pin No.	Pin Name	I/O	Function	Remarks
1	RH+	O	Toweeter output R+	–
2	RL+	O	Woofer output R+ (Speaker output R+)	–
3	RH–	O	Toweeter output R–	–
4	RL–	O	Woofer output R– (Speaker output R–)	–
5	LL+	O	Woofer output L+ (Speaker output L+)	–
6	LH+	O	Toweeter output L+	–
7	LL–	O	Woofer output L– (Speaker output L–)	–
8	LH–	O	Toweeter output L–	–

SIDE KEY Assy CN9501 (SW1) ↔ MAIN Assy CN4010 (M8)

Pin No.	Pin Name	I/O	Function	Remarks
1	GND	–	GND	–
2	KEY_AD2	O	KEY voltage 2	–
3	KEY_AD1	O	KEY voltage 1	–
4	V+3.3V_STB	–	Standby 3.3 V power supply	–

42 & 60 LED Assy CN9601 (L1) ↔ MAIN Assy CN4006 (M5)

Pin No.	Pin Name	I/O	Function	Remarks
1	LED–	–	LED signal return	–
2	LED_ON	I	LED control for power ON	H : LED_ON, L : LED_OFF
3	LED_OFF	I	LED control for standby	H : LED_ON, L : LED_OFF
4	LED_REC	I	LED control for REC	H : LED_ON, L : LED_OFF
5	LED_MDM	I	–	–
6	LED–	–	LED signal return	–

LED IR Assy CN9701 (RE1) ↔ MAIN Assy CN4010 (M8)

Pin No.	Pin Name	I/O	Function	Remarks
1	V+5.1V_STB	–	Standby 5.1 V power supply	–
2	REM	O	Remote control signal	–
3	LED–	–	LED signal return	–
4	LED_REC	I	LED control for REC	H : LED_ON, L : LED_OFF
5	LED_MDM	I	–	–
6	GND	–	GND	–

4.18 WAVEFORMS

■42 ADDRESS Assy

Control signals of resonance circuit (1 field)

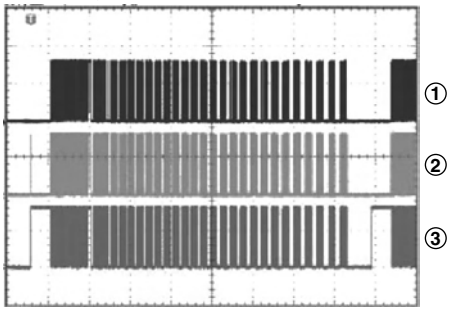

Input: VIDEO 60Hz
Signal: COLOR BAR (MKSS17)

① CH1: ADR_B (side-A test plane "B")
V: 2 V/div H: 2 mS/div

② CH2: ADR_U (side-A test plane "U")
V: 2 V/div H: 2 mS/div

③ CH3: ADR_D (side-A test plane "D")
V: 2 V/div H: 2 mS/div

Control signals of resonance circuit (resonance part)

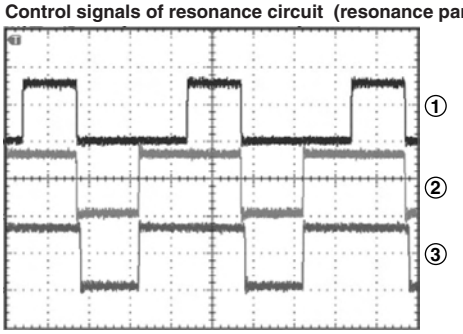

Input: VIDEO 60Hz
Signal: COLOR BAR (MKSS17)

① CH1: ADR_B (side-A test plane "B")
V: 2 V/div H: 200 nS/div

② CH2: ADR_U (side-A test plane "U")
V: 2 V/div H: 200 nS/div

③ CH3: ADR_D (side-A test plane "D")
V: 2 V/div H: 200 nS/div

VADR (1 field)

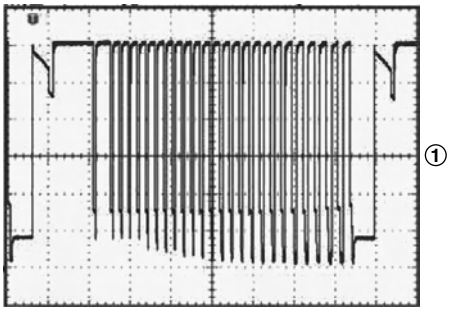

Input: VIDEO 60Hz
Signal: COLOR BAR (MKSS17)

① CH1: IC1555 - pin 3 (VDD2) (side-A through hole)
V: 10 V/div H: 2 mS/div

VADR (1 field)

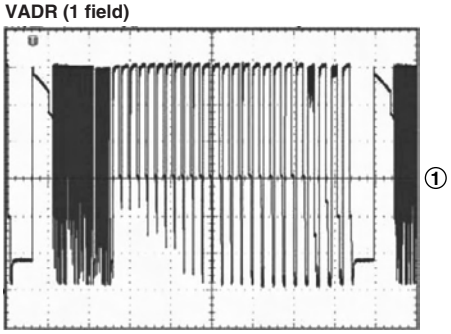

Input: VIDEO 60Hz
Signal: Checkered pattern of Black-White (MKSS13)

① CH1: IC1555 - pin 3 (VDD2) (side-A through hole)
V: 10 V/div H: 2 mS/div

VADR (resonance part)

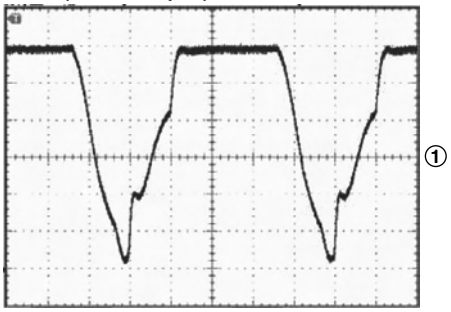

Input: VIDEO 60Hz
Signal: Checkered pattern of Black-White (MKSS13)

① CH1: IC1555 - pin 3 (VDD2) (side-A through hole)
V: 10 V/div H: 200 nS/div

Incoming signals of TCP (1 field)

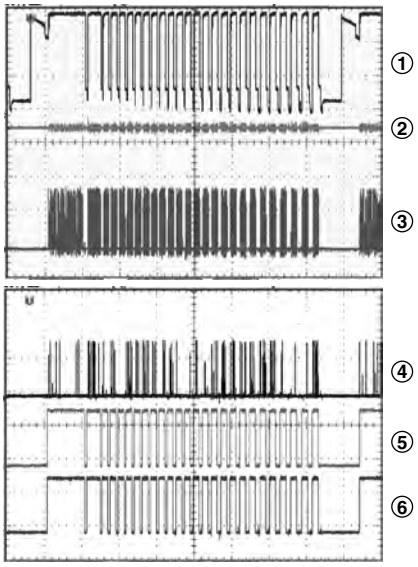

Input: VIDEO 60Hz
Signal: COLOR BAR (MKSS17)

① CH1: IC1555 - pin 3 (VDD2) (side-A through hole)
V: 20 V/div H: 2 mS/div

② CH2: IC1555 - pin 9 (A3) (side-A test plane "R_E")
V: 2 V/div H: 2 mS/div

③ CH3: IC1555 - pin 16 (CLK) (side-A test plane "CLK1")
V: 2 V/div H: 2 mS/div

④ CH1: IC1555 - pin 14 (LE) (side-A test plane "LE_E")
V: 2 V/div H: 2 mS/div

⑤ CH2: IC1555 - pin 19 (HBLK) (side-A test plane "HBLK")
V: 2 V/div H: 2 mS/div

⑥ CH3: IC1555 - pin 17 (LBLK) (side-A test plane "LBLK")
V: 2 V/div H: 2 mS/div

Incoming signals of TCP (1 field)

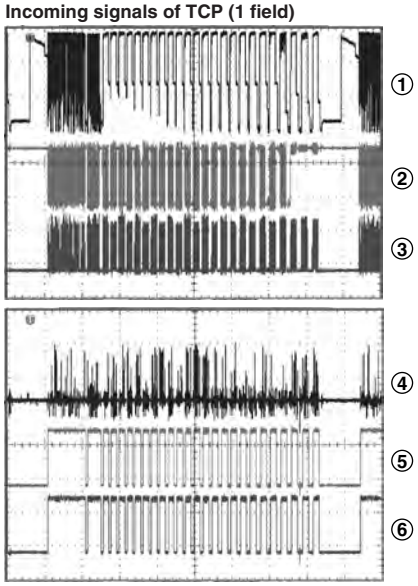

Input: VIDEO 60Hz
Signal: Checkered pattern of Black-White (MKSS13)

① CH1: IC1555 - pin 3 (VDD2) (side-A through hole)
V: 20 V/div H: 2 mS/div

② CH2: IC1555 - pin 9 (A3) (side-A test plane "R_E")
V: 2 V/div H: 2 mS/div

③ CH3: IC1555 - pin 16 (CLK) (side-A test plane "CLK1")
V: 2 V/div H: 2 mS/div

④ CH1: IC1555 - pin 14 (LE) (side-A test plane "LE_E")
V: 2 V/div H: 2 mS/div

⑤ CH2: IC1555 - pin 19 (HBLK) (side-A test plane "HBLK")
V: 2 V/div H: 2 mS/div

⑥ CH3: IC1555 - pin 17 (LBLK) (side-A test plane "LBLK")
V: 2 V/div H: 2 mS/div

Incoming signals of TCP (resonance part)

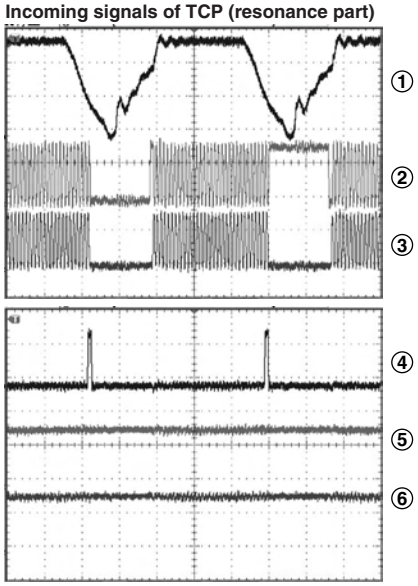

Input: VIDEO 60Hz
Signal: Checkered pattern of Black-White (MKSS13)

① CH1: IC1555 - pin 3 (VDD2) (side-A through hole)
V: 20 V/div H: 200 nS/div

② CH2: IC1555 - pin 9 (A3) (side-A test plane "R_E")
V: 2 V/div H: 200 nS/div

③ CH3: IC1555 - pin 16 (CLK) (side-A test plane "CLK1")
V: 2 V/div H: 200 nS/div

④ CH1: IC1555 - pin 14 (LE) (side-A test plane "LE_E")
V: 2 V/div H: 200 nS/div

⑤ CH2: IC1555 - pin 19 (HBLK) (side-A test plane "HBLK")
V: 2 V/div H: 200 nS/div

⑥ CH3: IC1555 - pin 17 (LBLK) (side-A test plane "LBLK")
V: 2 V/div H: 200 nS/div

42 X DRIVE Assy, 42 Y DRIVE Assy, 42 SCAN A Assy, 42 SCAN B Assy

Drive output signal (1 field)

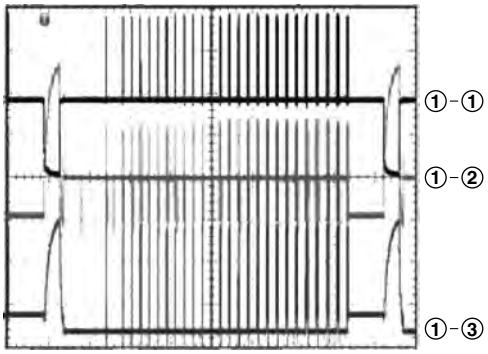

Input: VIDEO 60Hz
Signal: COLOR BAR (MKSS17)

① CH1: R1277 (XPSUS) ↔ K1203 (SUSGND)
V: 100 V/div H: 2 mS/div
(42 X DRIVE Assy)

② CH2: K2701 (SCANOUT) ↔ K2330 (SUSGND)
V: 100 V/div H: 2 mS/div
(42 Y DRIVE Assy)

③ CH3: F2301 (YPSUS) ↔ K2330 (SUSGND)
V: 100 V/div H: 2 mS/div
(42 Y DRIVE Assy)

X drive pulse control signal (color-bar)(resonance part)

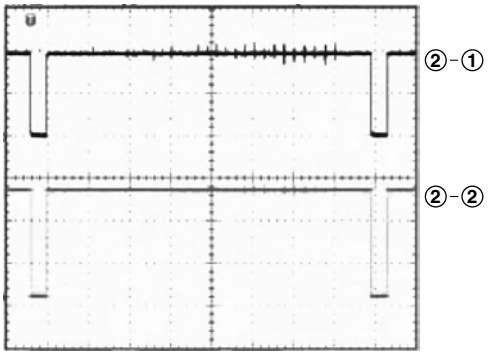

Input: VIDEO 60Hz
Signal: COLOR BAR (MKSS17)

① CH1: K1009 (XSUS-MSK) ↔ K1002 (DGND)
V: 2 V/div H: 2 mS/div
(42 X DRIVE Assy)

② CH2: K1005 (XNR-D) ↔ K1002 (DGND)
V: 2 V/div H: 2 mS/div
(42 X DRIVE Assy)

Y drive pulse control signal (color-bar)

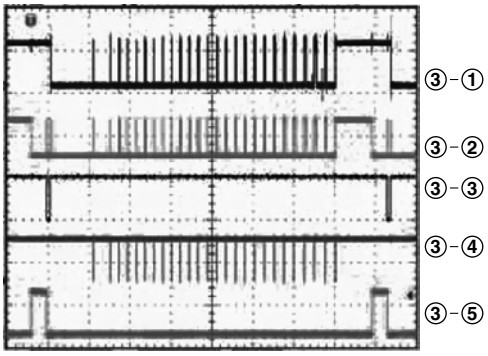

Input: VIDEO 60Hz
Signal: COLOR BAR (MKSS17)

① CH1: K2007 (YNOFS) ↔ K2002 (GND_D)
V: 5 V/div H: 2 mS/div
(42 Y DRIVE Assy)

② CH2: K2005 (YSUS-MSK) ↔ K2002 (GND_D)
V: 5 V/div H: 2 mS/div
(42 Y DRIVE Assy)

③ Ref3: K2008 (YNRST) ↔ K2002 (GND_D)
V: 5 V/div H: 2 mS/div
(42 Y DRIVE Assy)

④ CH3: K2006 (SOFT_D) ↔ K2002 (GND_D)
V: 5 V/div H: 2 mS/div
(42 Y DRIVE Assy)

⑤ CH4: K2023 (YRP_U) ↔ K2002 (GND_D)
V: 5 V/div H: 2 mS/div
(42 Y DRIVE Assy)

Scan control signal (Color-bar)

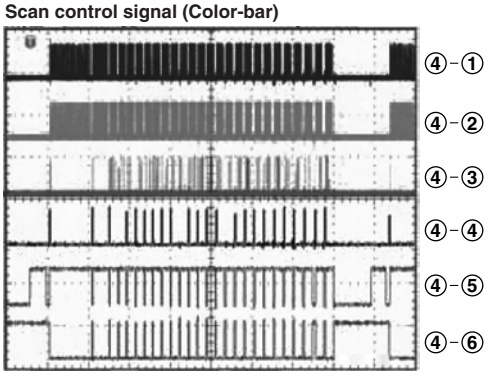

Input: VIDEO 60Hz
Signal: COLOR BAR (MKSS17)

① CH1: TP2001 (LE) ↔ K2002 (GND_D)
V: 5 V/div H: 2 mS/div
(42 Y DRIVE Assy)

② CH2: TP2008 (CLK) ↔ K2002 (GND_D)
V: 5 V/div H: 2 mS/div
(42 Y DRIVE Assy)

③ CH3: TP2003 (Si-H) ↔ K2002 (GND_D)
V: 5 V/div H: 2 mS/div
(42 Y DRIVE Assy)

④ Ref1: TP2004 (CLR) ↔ K2002 (GND_D)
V: 5 V/div H: 2 mS/div
(42 Y DRIVE Assy)

⑤ Ref2: TP2005 (OC2) ↔ K2002 (GND_D)
V: 5 V/div H: 2 mS/div
(42 Y DRIVE Assy)

⑥ Ref3: TP2006 (OC1) ↔ K2002 (GND_D)
V: 5 V/div H: 2 mS/div
(42 Y DRIVE Assy)

Reset pulse signal

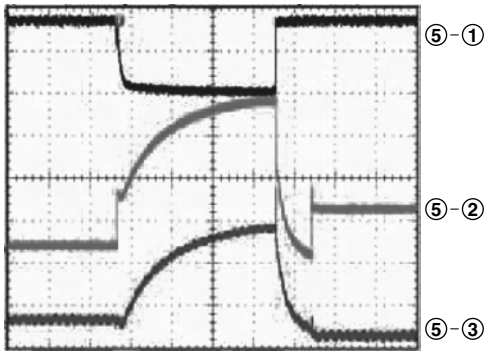

Input: VIDEO 60Hz
Signal: COLOR BAR (MKSS17)

① CH1: R1277 (XPSUS) ↔ K1203 (SUSGND)
V: 100 V/div H: 200 µS/div
(42 X DRIVE Assy)

② CH2: K2701 (SCANOUT) ↔ K2330 (SUSGND)
V: 100 V/div H: 200 µS/div
(42 Y DRIVE Assy)

③ CH3: F2301 (YPSUS) ↔ K2330 (SUSGND)
V: 100 V/div H: 200 µS/div
(42 Y DRIVE Assy)

Sustain pulse signal (1 sub, subfield)

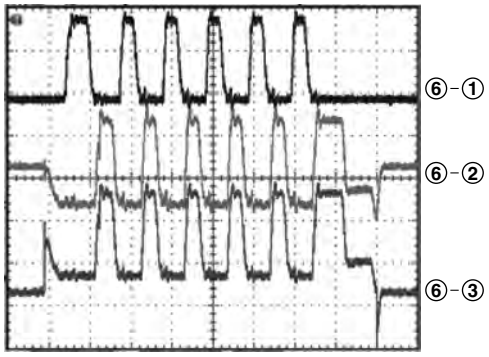

Input: VIDEO 60Hz
Signal: COLOR BAR (MKSS17)

① CH1: R1277 (XPSUS) ↔ K1203 (SUSGND)
V: 100 V/div H: 4 µS/div
(42 X DRIVE Assy)

② CH2: K2701 (SCANOUT) ↔ K2330 (SUSGND)
V: 100 V/div H: 4 µS/div
(42 Y DRIVE Assy)

③ CH3: F2301 (YPSUS) ↔ K2330 (SUSGND)
V: 100 V/div H: 4 µS/div
(42 Y DRIVE Assy)

Sustain pulse signal

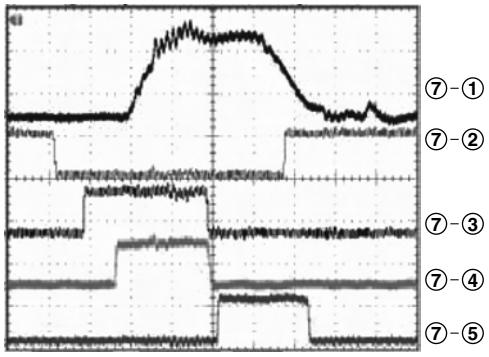

Input: VIDEO 60Hz
Signal: COLOR BAR (MKSS17)

① CH1: F2301 (YPSUS) ↔ K2330 (SUSGND)
V: 100 V/div H: 400 nS/div
(42 Y DRIVE Assy)

② Ref3: K2004 (YSUS-G) ↔ K2002 (GND_D)
V: 5 V/div H: 400 nS/div
(42 Y DRIVE Assy)

③ Ref2: K2011 (YSUS-U) ↔ K2002 (GND_D)
V: 5 V/div H: 400 nS/div
(42 Y DRIVE Assy)

④ CH2: K2009 (YSUS-B) ↔ K2002 (GND_D)
V: 5 V/div H: 400 nS/div
(42 Y DRIVE Assy)

⑤ CH3: K2010 (YSUS-D) ↔ K2002 (GND_D)
V: 5 V/div H: 400 nS/div
(42 Y DRIVE Assy)

5. DIAGNOSIS
5.1 TROUBLE SHOOTING
5.1.1 FLOWCHART OF FAILURE ANALYSIS FOR THE WHOLE UNIT

Flowchart of Failure Analysis for The Whole Unit

Flowchart of Failure Analysis for The Whole Unit

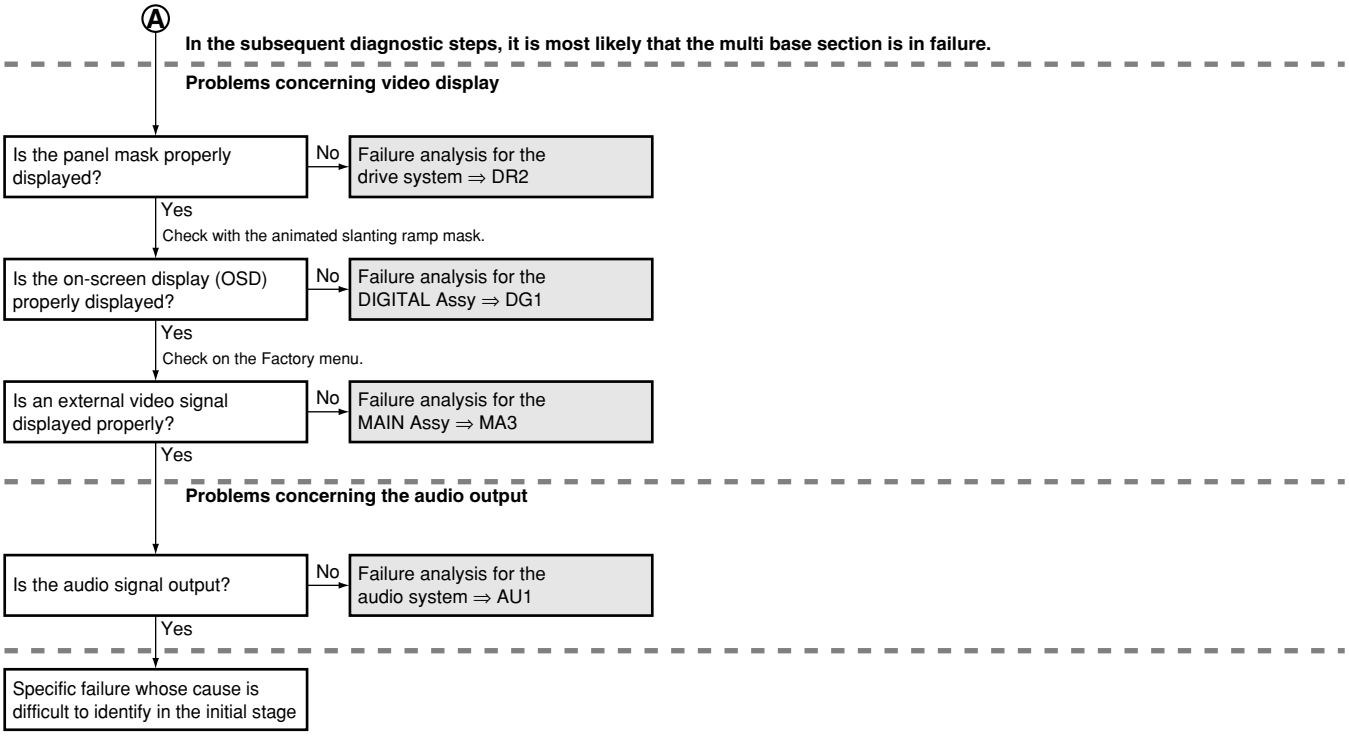

5.1.2 FLOWCHART OF FAILURE ANALYSIS FOR THE POWER SUPPLY UNIT

Flowchart of Failure Analysis for The POWER SUPPLY Unit

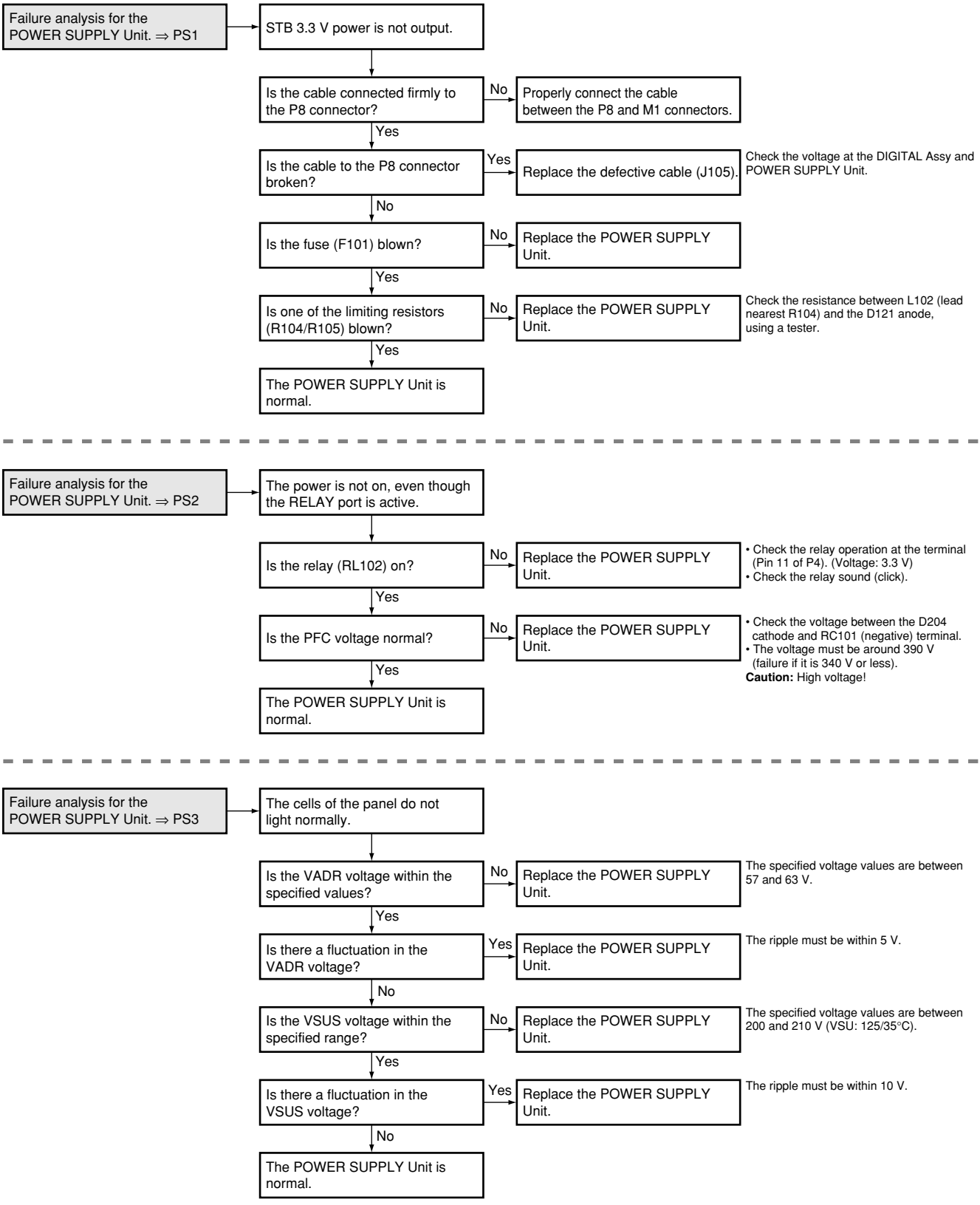

5.1.3 FLOWCHART OF FAILURE ANALYSIS FOR THE DIGITAL ASSY

Flowchart of Failure Analysis for The DIGITAL Assy

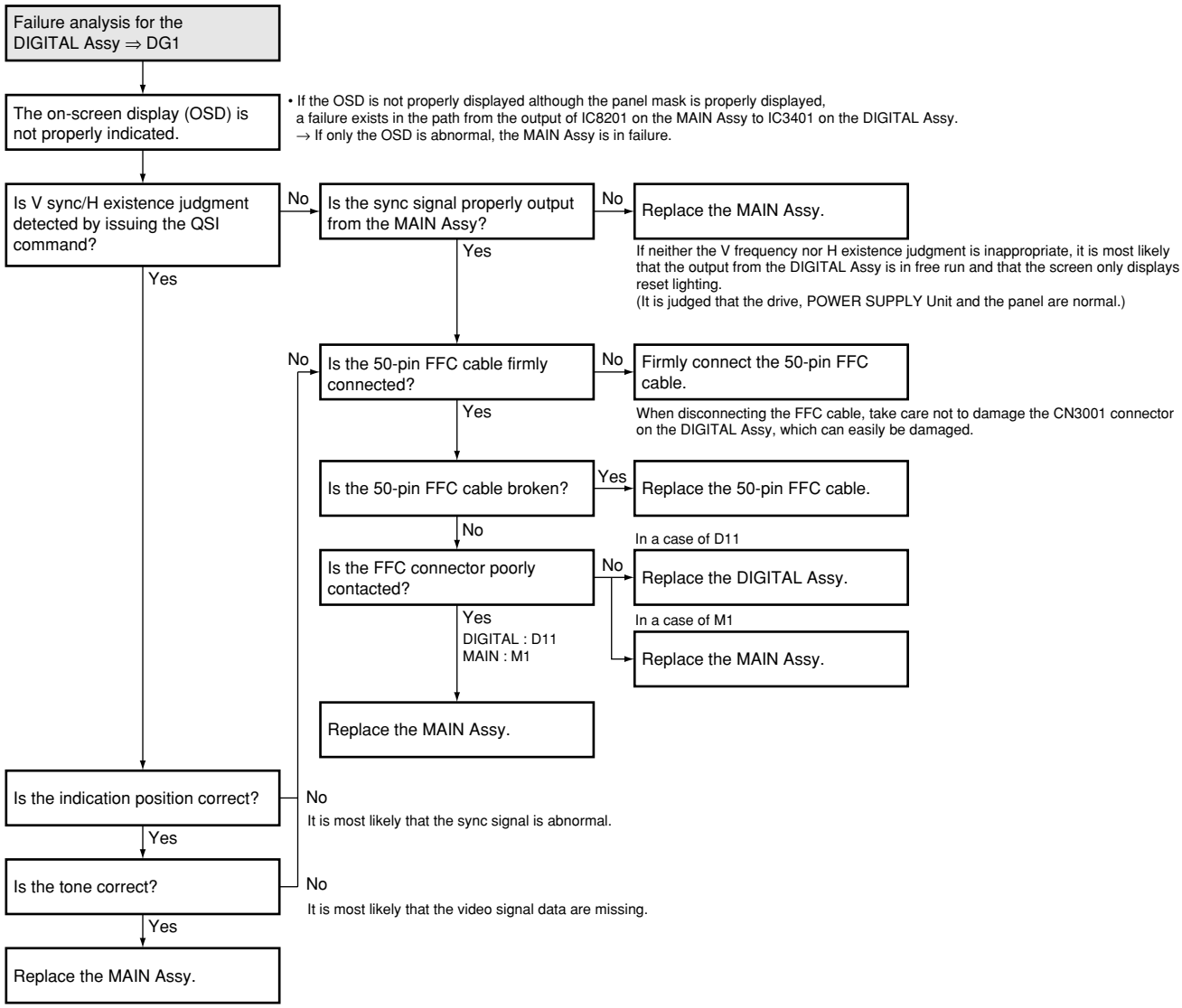

5.1.4 FLOWCHART OF FAILURE ANALYSIS FOR THE DRIVE ASSY

Flowchart of Failure Analysis for The Drive Assy

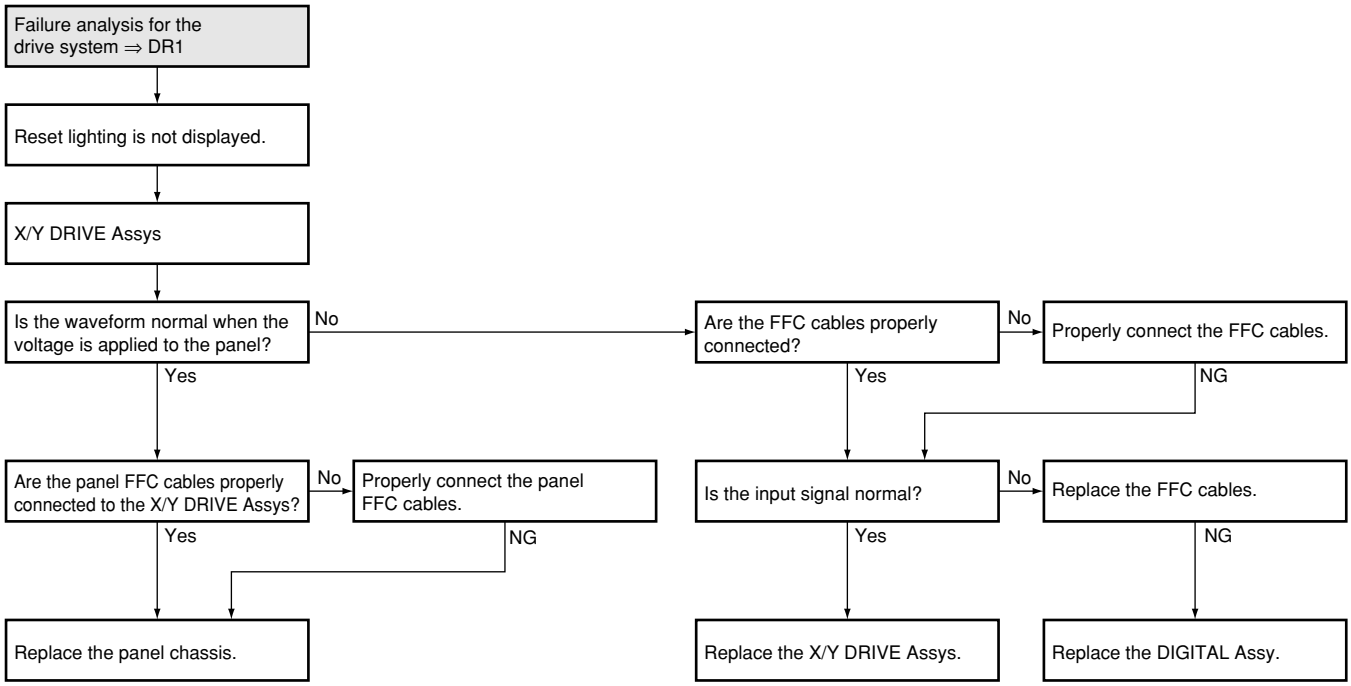

Flowchart of Failure Analysis for The Drive Assy

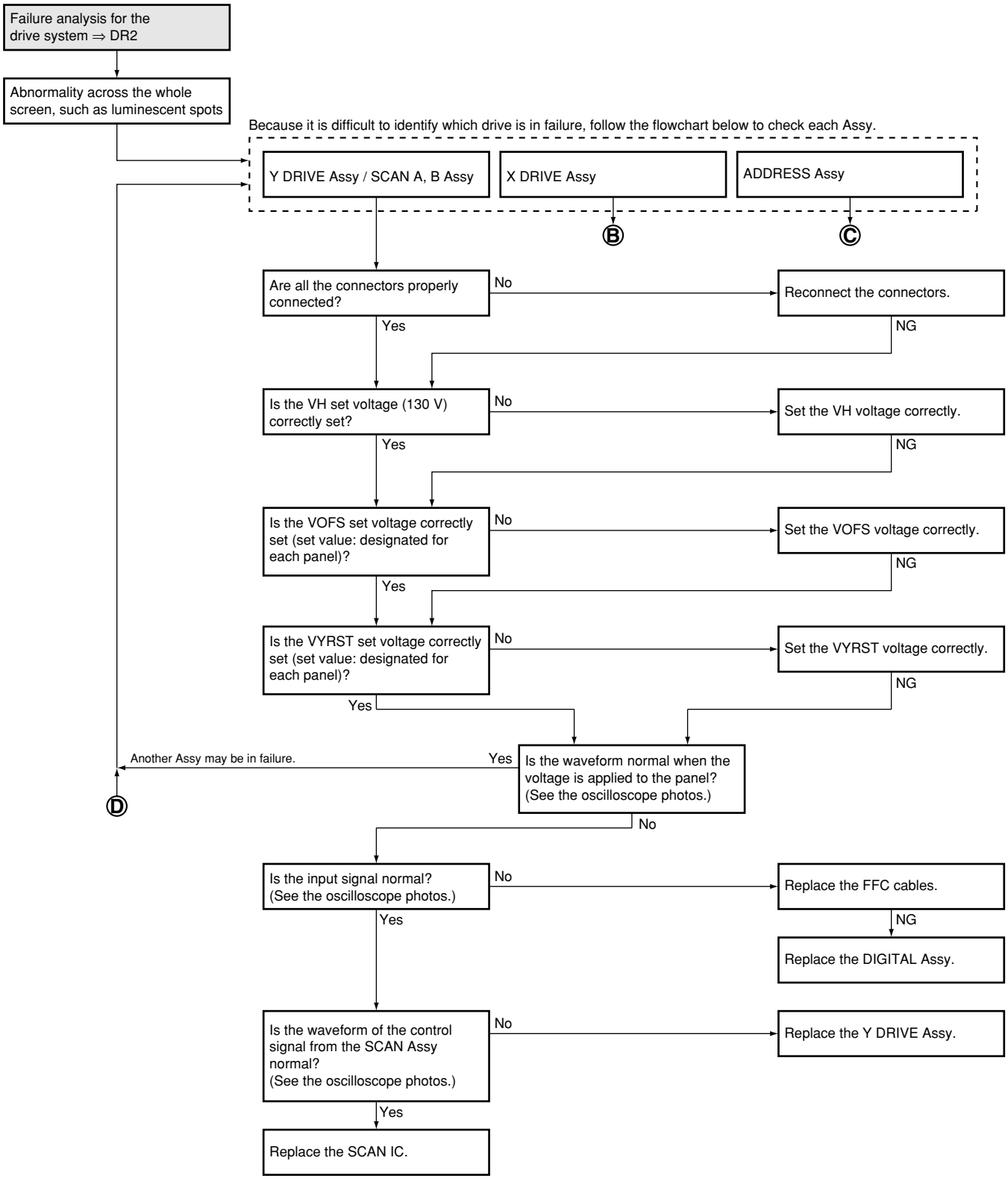

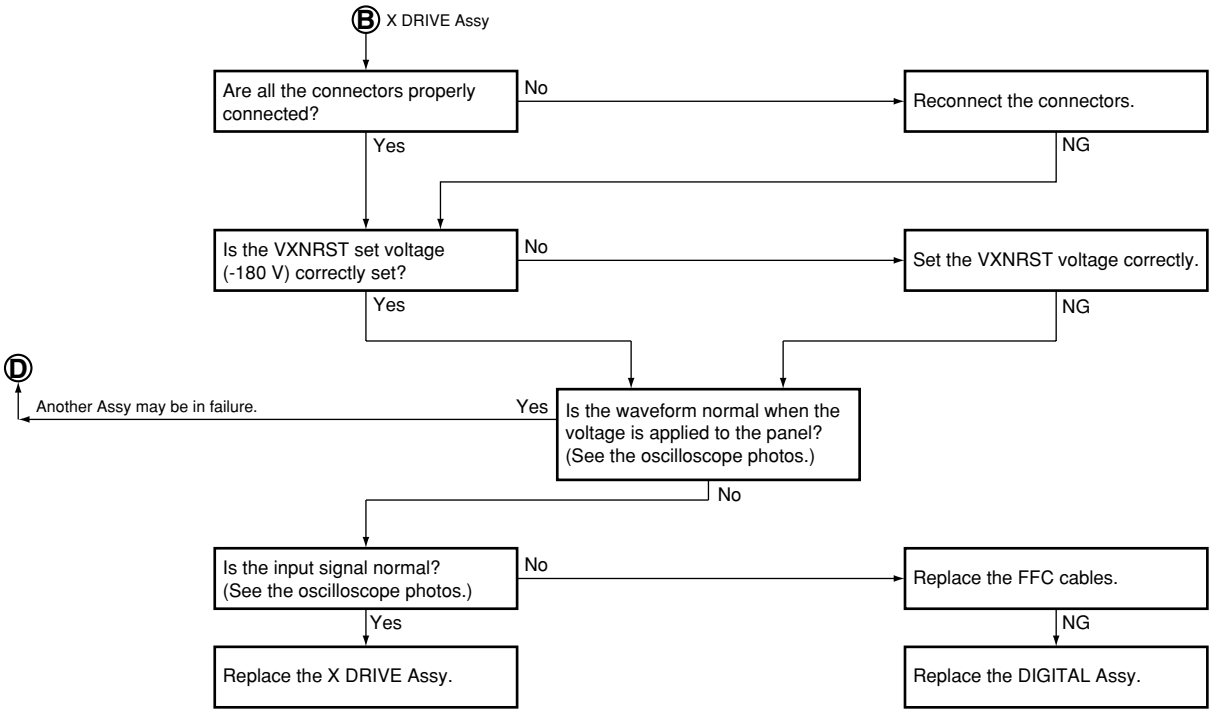
Ⓑ X DRIVE Assy
Are all the connectors properly connected?
No
Reconnect the connectors.
Yes
NG
Is the VXNRST set voltage (-180 V) correctly set?
No
Set the VXNRST voltage correctly.
Yes
NG
Ⓓ
Another Assy may be in failure.
Yes
Is the waveform normal when the voltage is applied to the panel? (See the oscilloscope photos.)
No
Is the input signal normal? (See the oscilloscope photos.)
No
Replace the FFC cables.
Yes
NG
Replace the X DRIVE Assy.
Replace the DIGITAL Assy.

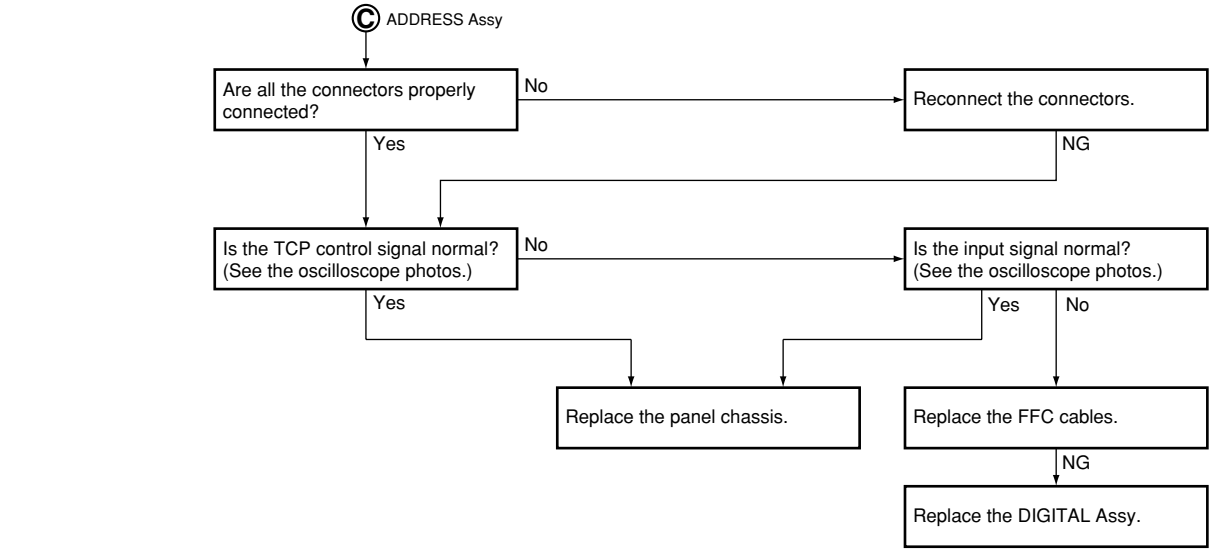
Ⓒ ADDRESS Assy
Are all the connectors properly connected?
No
Reconnect the connectors.
Yes
NG
Is the TCP control signal normal? (See the oscilloscope photos.)
No
Is the input signal normal? (See the oscilloscope photos.)
Yes
Yes
No
Replace the panel chassis.
Replace the FFC cables.
NG
Replace the DIGITAL Assy.

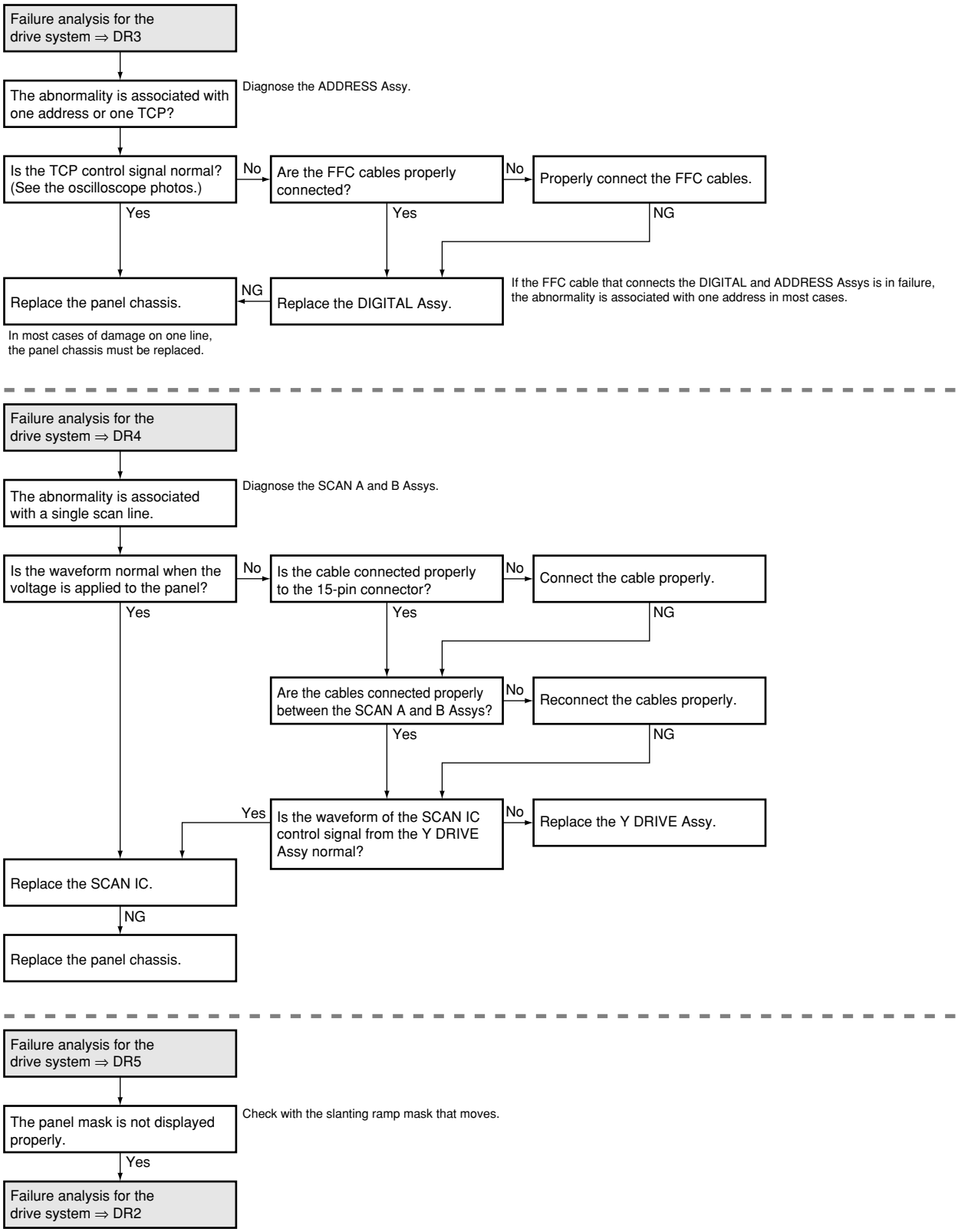
Failure analysis for the drive system ⇒ DR3
The abnormality is associated with one address or one TCP?
Diagnose the ADDRESS Assy.
Is the TCP control signal normal? (See the oscilloscope photos.)
No
Are the FFC cables properly connected?
No
Properly connect the FFC cables.
Yes
Yes
NG
Replace the panel chassis.
NG
Replace the DIGITAL Assy.
If the FFC cable that connects the DIGITAL and ADDRESS Assys is in failure, the abnormality is associated with one address in most cases.
In most cases of damage on one line, the panel chassis must be replaced.
Failure analysis for the drive system ⇒ DR4
The abnormality is associated with a single scan line.
Diagnose the SCAN A and B Assys.
Is the waveform normal when the voltage is applied to the panel?
No
Is the cable connected properly to the 15-pin connector?
No
Connect the cable properly.
Yes
Yes
NG
Are the cables connected properly between the SCAN A and B Assys?
No
Reconnect the cables properly.
Yes
NG
Yes
Is the waveform of the SCAN IC control signal from the Y DRIVE Assy normal?
No
Replace the Y DRIVE Assy.
Replace the SCAN IC.
NG
Replace the panel chassis.
Failure analysis for the drive system ⇒ DR5
The panel mask is not displayed properly.
Check with the slanting ramp mask that moves.
Yes
Failure analysis for the drive system ⇒ DR2

5.1.5 FLOWCHART OF FAILURE ANALYSIS FOR THE MAIN ASSY

Flowchart of Failure Analysis for The MAIN Assy

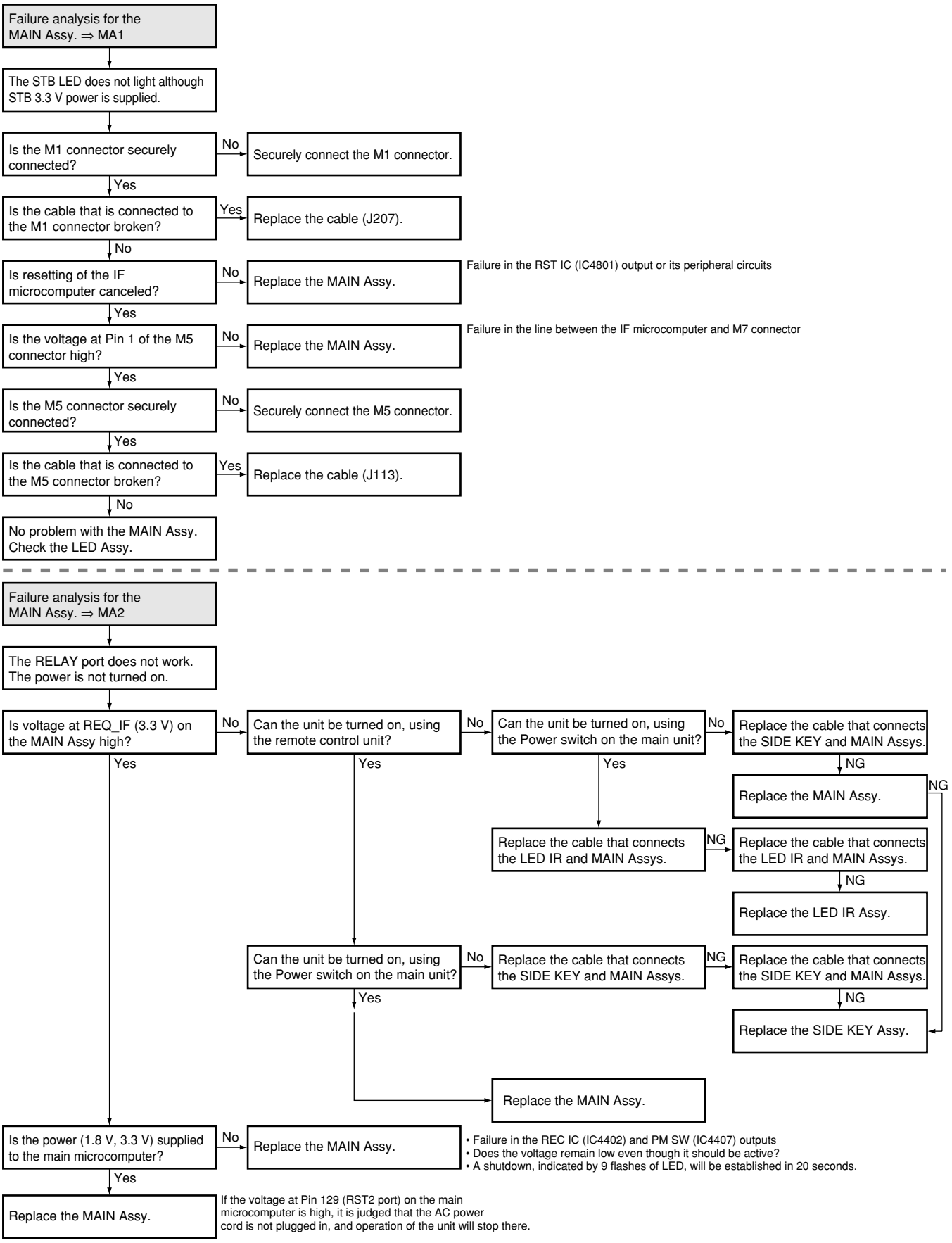

5.1.6 FLOWCHART OF FAILURE ANALYSIS FOR THE VIDEO SYSTEM

Flowchart of Failure Analysis for The Video System

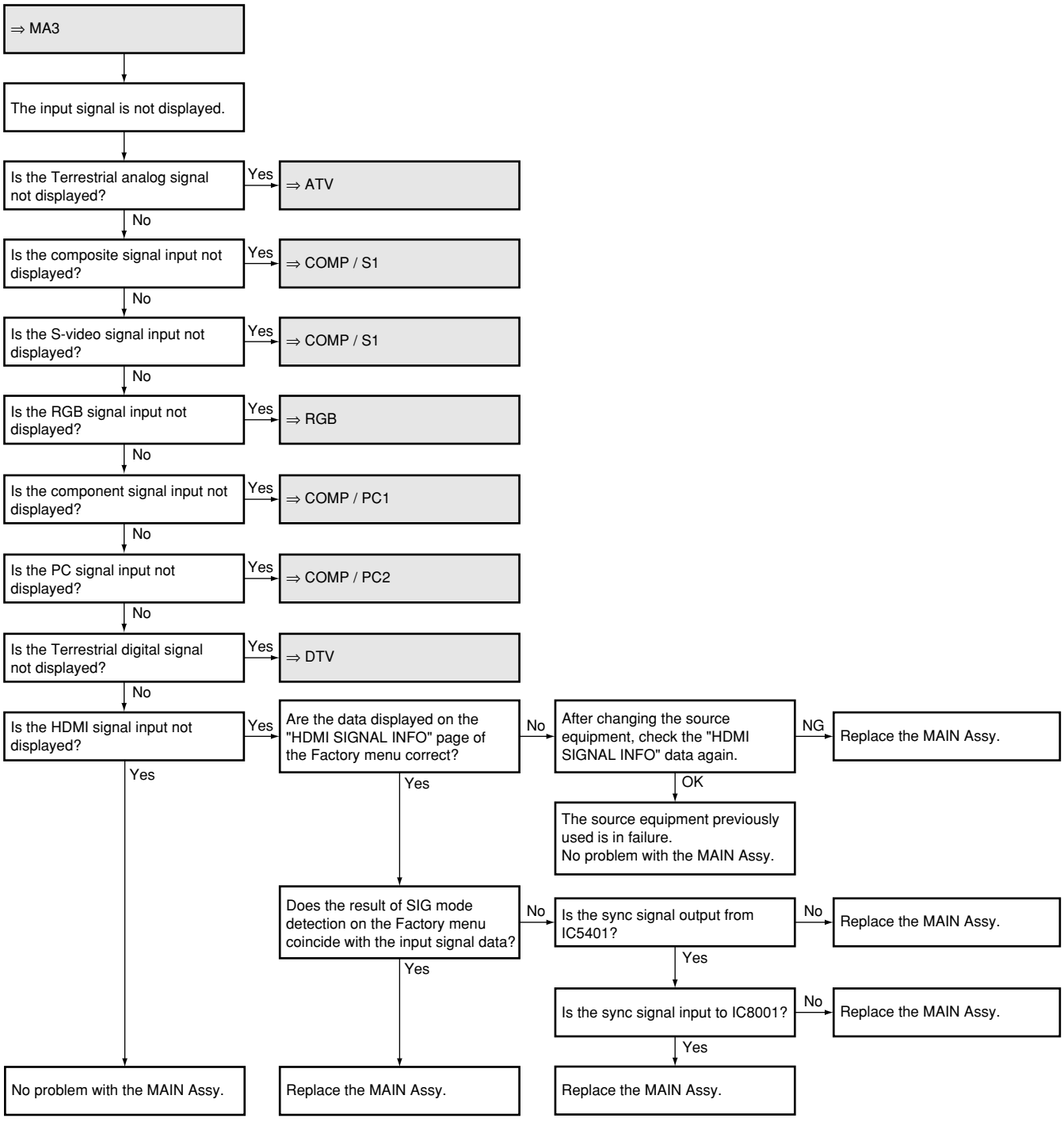

Flowchart of Failure Analysis for The Video System

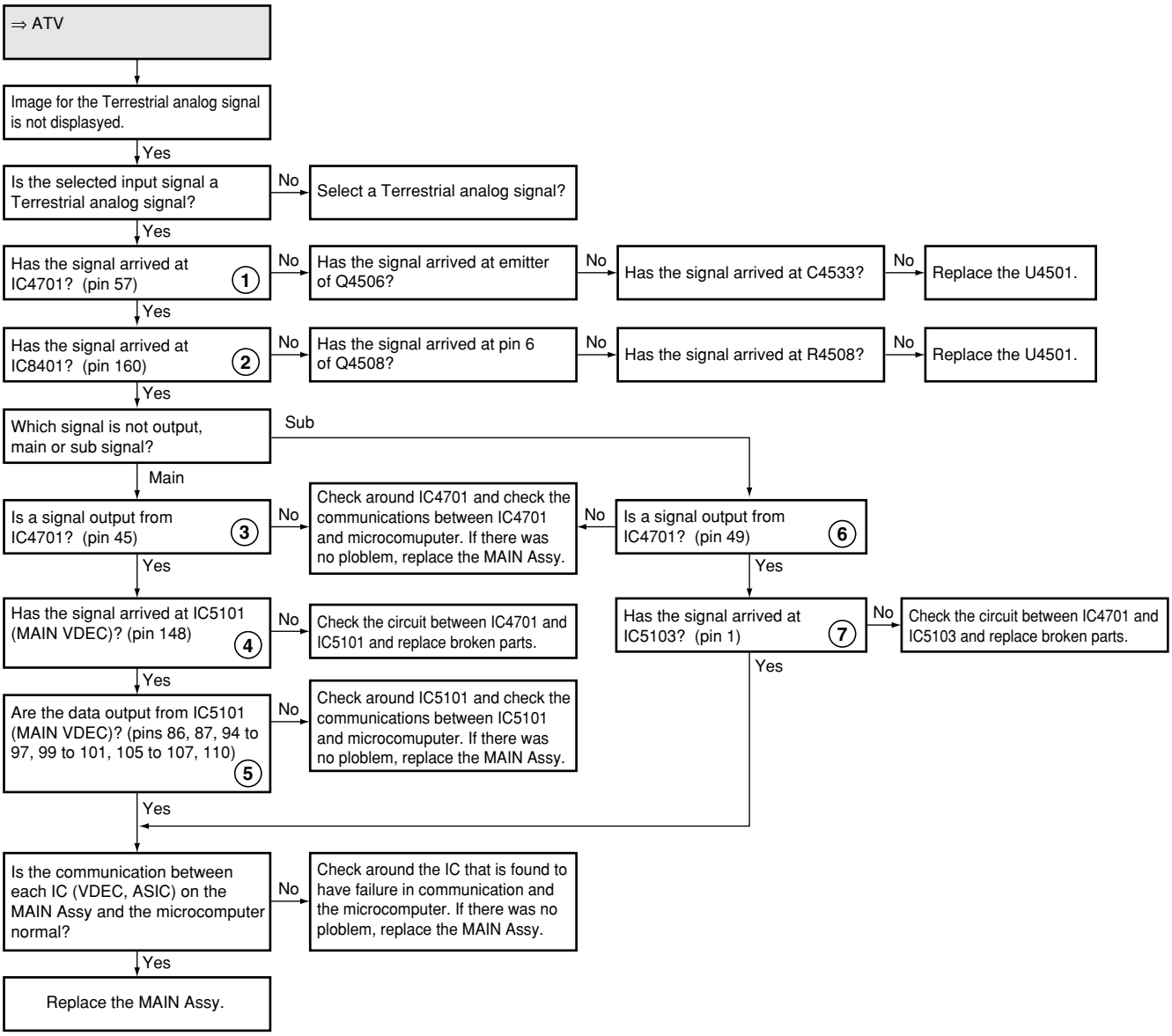

● Waveforms

Input signal: PAL Color-bar (Analog tuner)

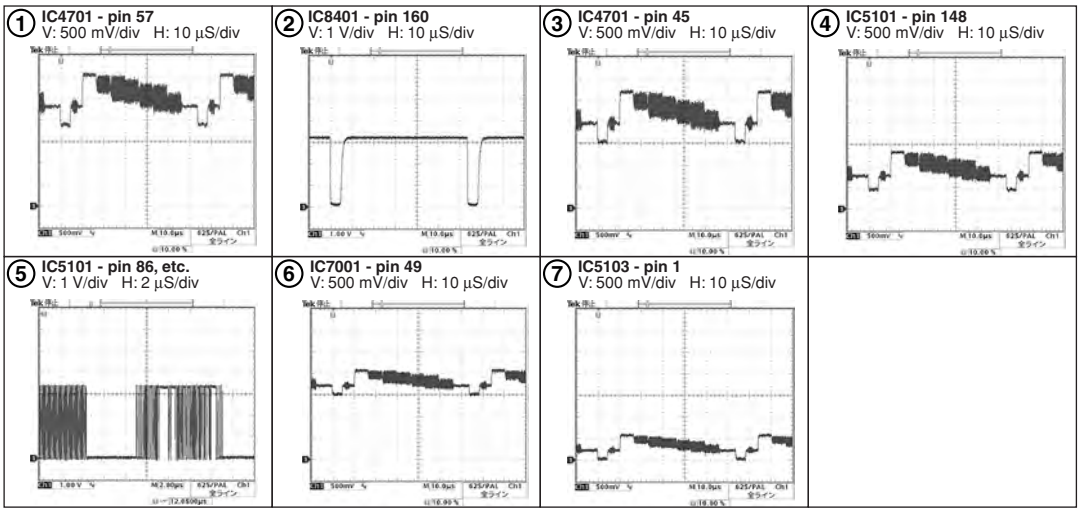

Flowchart of Failure Analysis for The Video System

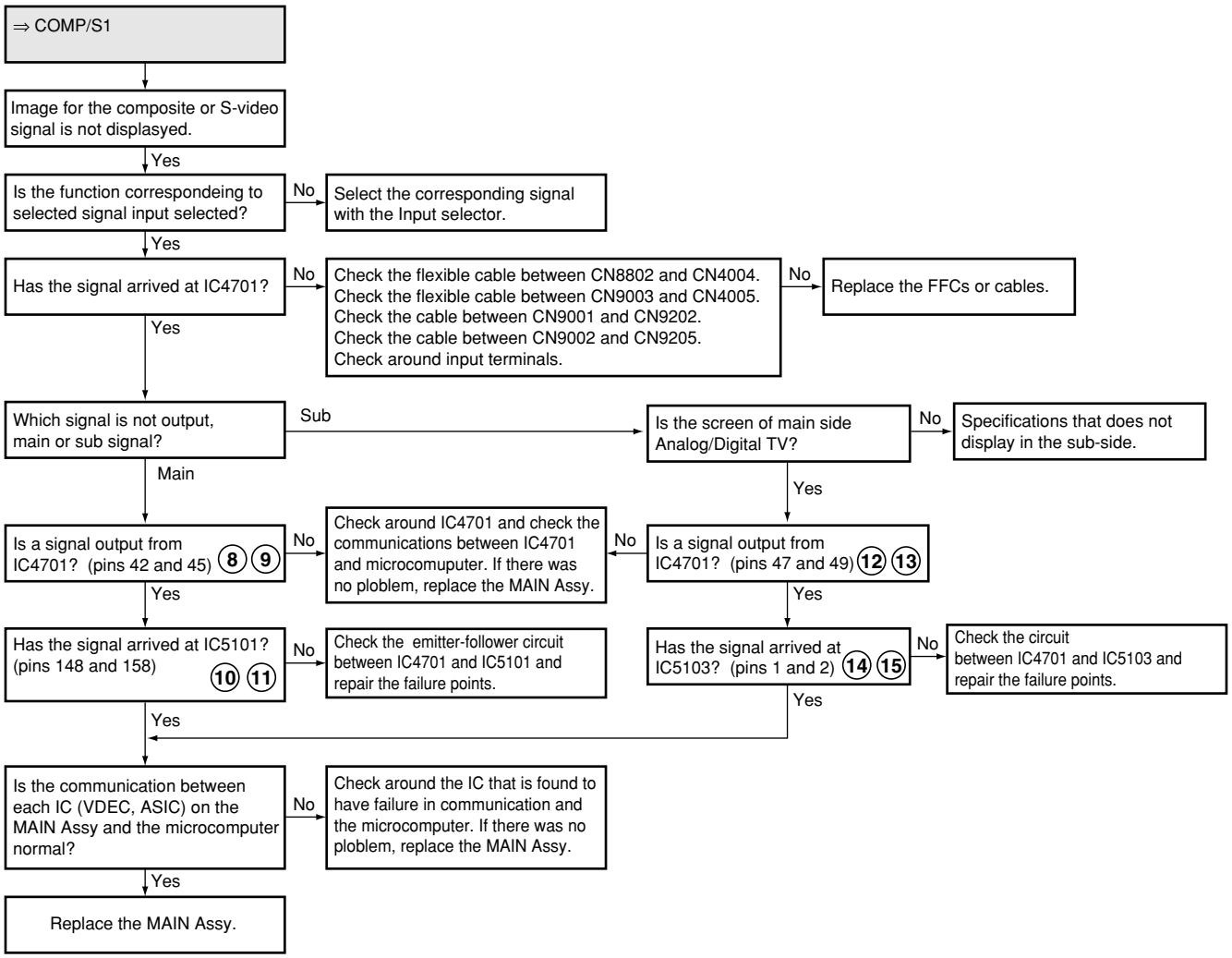

● Waveforms

Input signal: PAL Color-bar (S terminal)

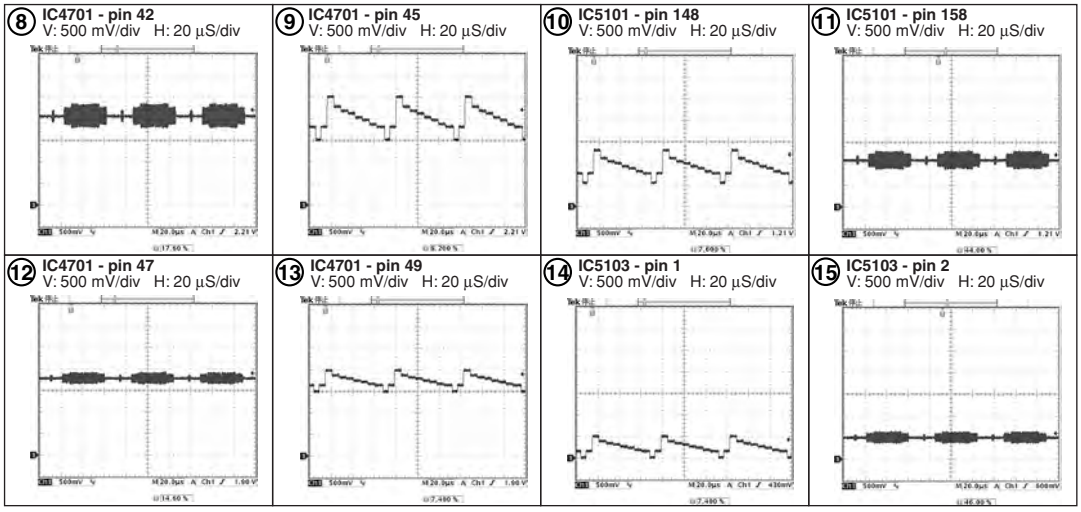

Flowchart of Failure Analysis for The Video System

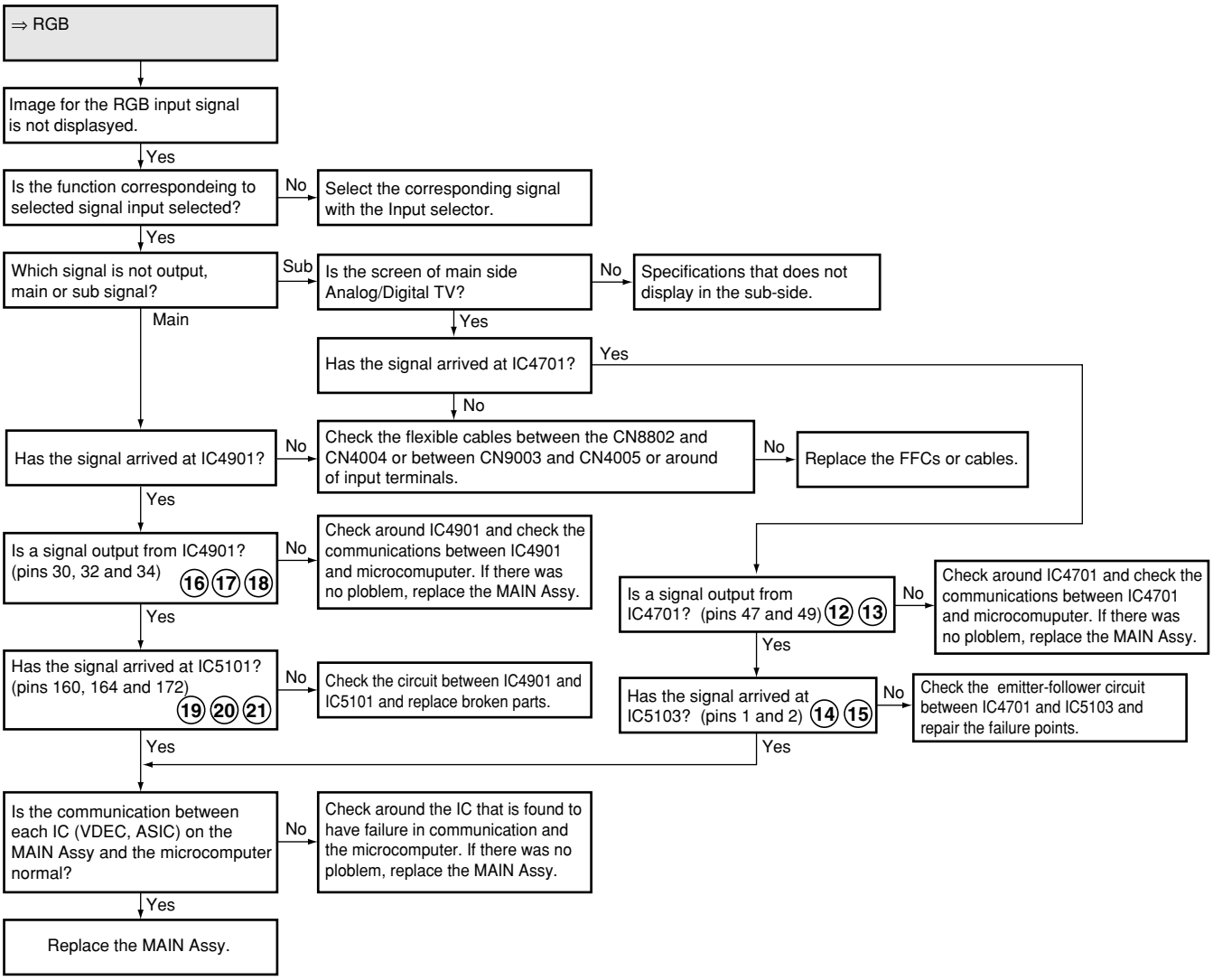

● Waveforms

Input signal: PAL Color-bar (S terminal)

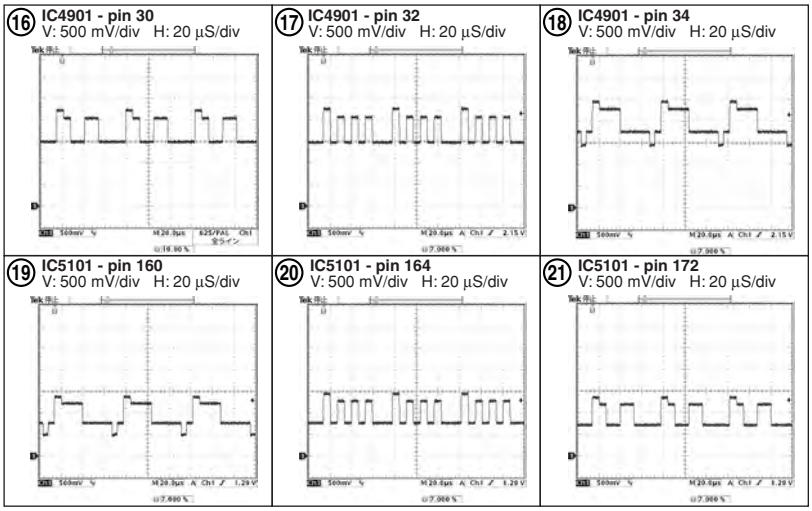

Flowchart of Failure Analysis for The Video System

No video from component

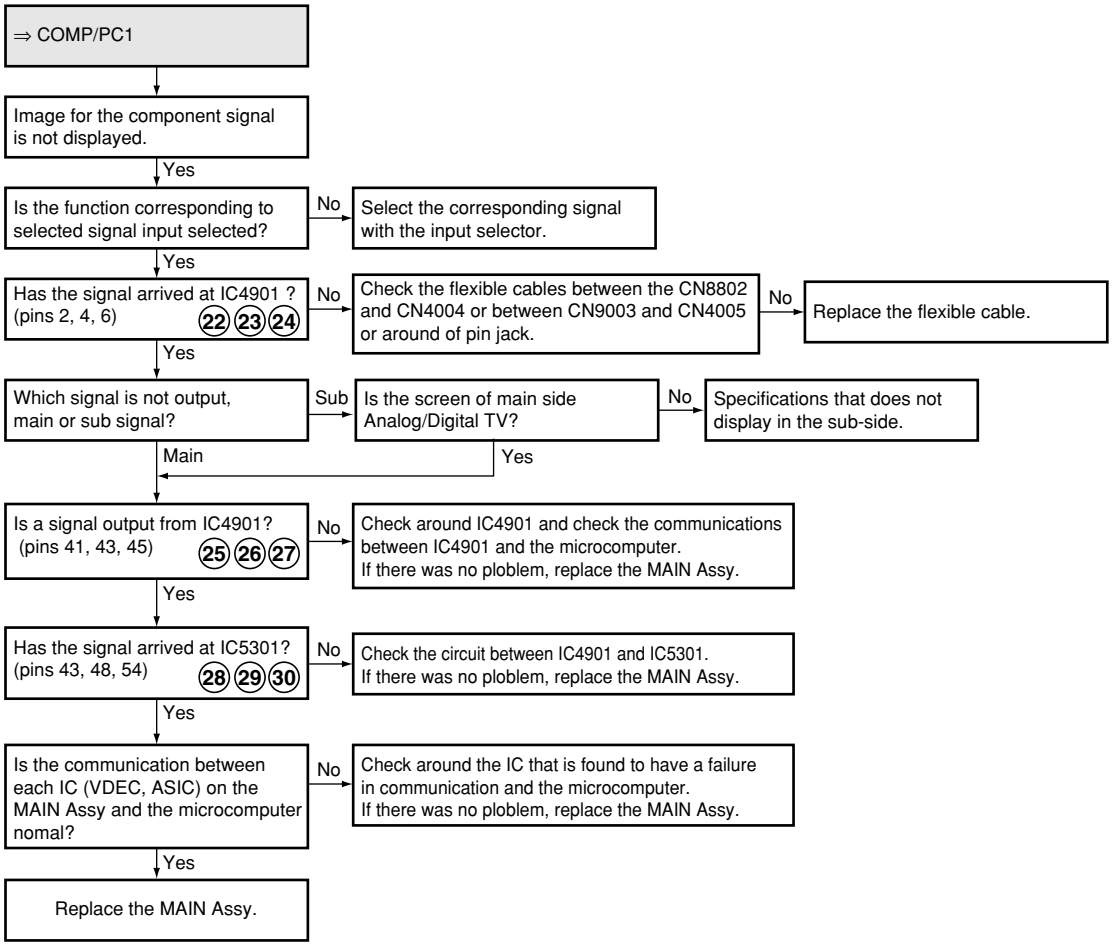

● Waveforms

Input signal: Color-bar (Component 1080i)

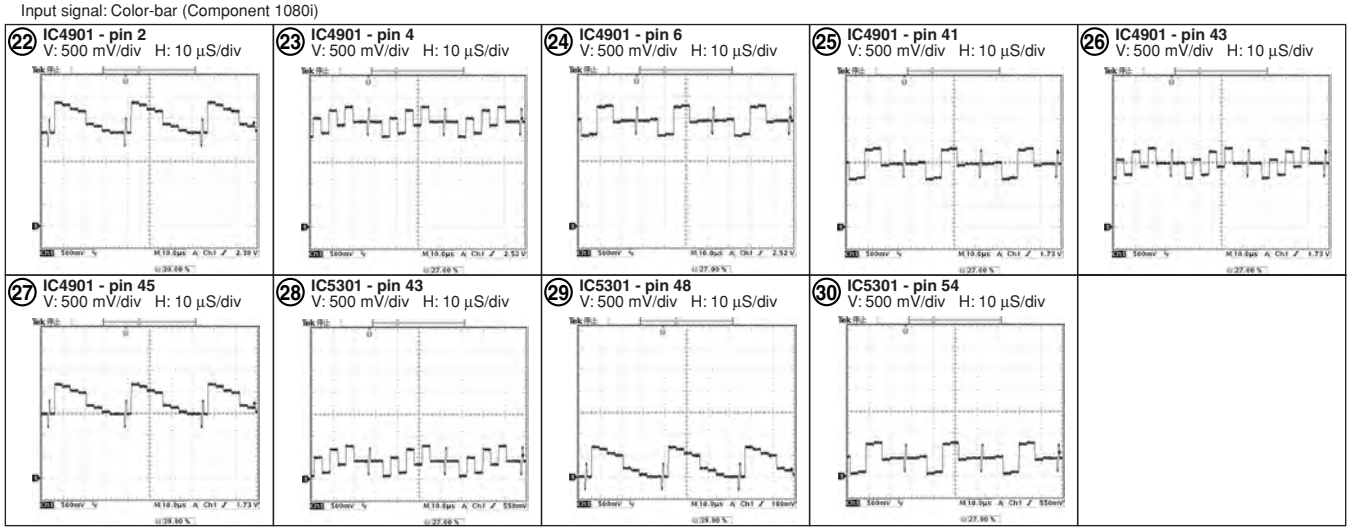

Flowchart of Failure Analysis for The Video System

⇒ COMP/PC2

Image for the PC signal is not displayed.

Yes

Is the function corresponding to selected signal input selected?
- No → Select the corresponding signal with the input selector.

Yes

Has the signal arrived at IC4901 ? (pins 61, 62, 64, 66, 68) ㉛ ㉜ ㉝ ㉞ ㉟
- No → Check the flexible cable between the CN9301 and CN4018 or around of jack.
  - No → Replace the flexible cable.

Yes

Which signal is not output, main or sub signal?
- Sub → Is the screen of main side Analog/Digital TV?
  - No → Specifications that does not display in the sub-side.
  - Yes
- Main

Is a signal output from IC4901? (pins 41, 43, 45) ㊱ ㊲ ㊳
- No → Check around IC4901 and check the communications between IC4901 and the microcomputer. If there was no ploblem, replace the MAIN Assy.

Yes

Has the signal arrived at IC5301? (pins 43, 48, 54) ㊴ ㊵ ㊶
- No → Check the circuit between IC4901 and IC5301. If there was no ploblem, replace the MAIN Assy.

Yes

Is the communication between each IC (VDEC, ASIC) on the MAIN Assy and the microcomputer nomal?
- No → Check around the IC that is found to have a failure in communication and the microcomputer. If there was no ploblem, replace the MAIN Assy.

Yes

Replace the MAIN Assy.

● Waveforms

Input signal: Color-bar (PC XGA/60 Hz)

㉛ **IC4901 - pin 61**
V: 1 V/div H: 2 mS/div

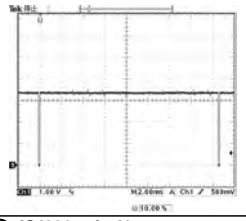

㉜ **IC4901 - pin 62**
V: 1 V/div H: 10 µS/div

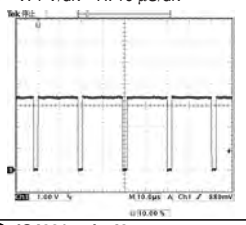

㉝ **IC4901 - pin 64**
V: 500 mV/div H: 10 µS/div

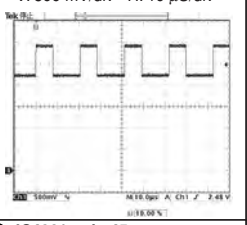

㉞ **IC4901 - pin 66**
V: 500 mV/div H: 10 µS/div

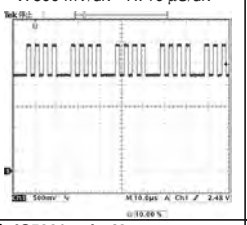

㉟ **IC4901 - pin 68**
V: 500 mV/div H: 10 µS/div

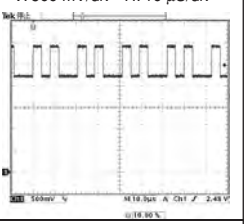

㊱ **IC4901 - pin 41**
V: 500 mV/div H: 10 µS/div

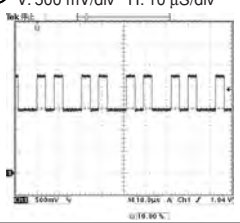

㊲ **IC4901 - pin 43**
V: 500 mV/div H: 10 µS/div

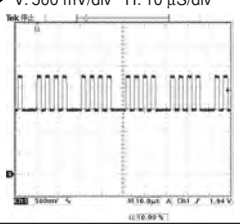

㊳ **IC4901 - pin 45**
V: 500 mV/div H: 10 µS/div

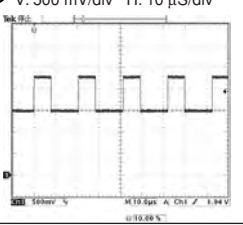

㊴ **IC5301 - pin 43**
V: 500 mV/div H: 10 µS/div

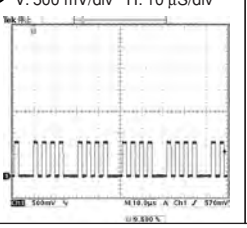

㊵ **IC5301 - pin 48**
V: 500 mV/div H: 10 µS/div

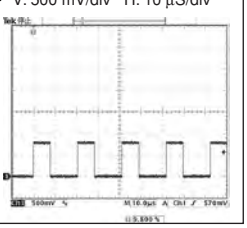

㊶ **IC5301 - pin 54**
V: 500 mV/div H: 10 µS/div

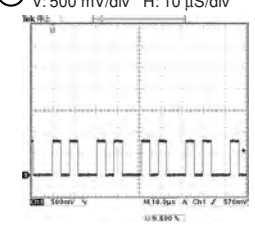

Flowchart of Failure Analysis for The Video System

DTV doesn't work

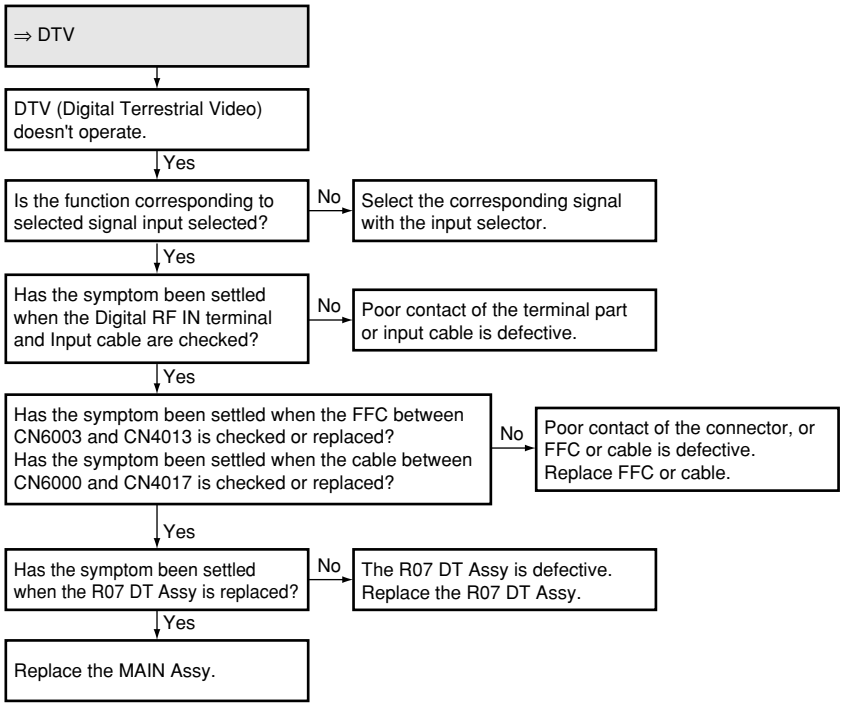

5.1.7 FLOWCHART OF FAILURE ANALYSIS FOR THE AUDIO SYSTEM

Flowchart of Failure Analysis for The Audio System

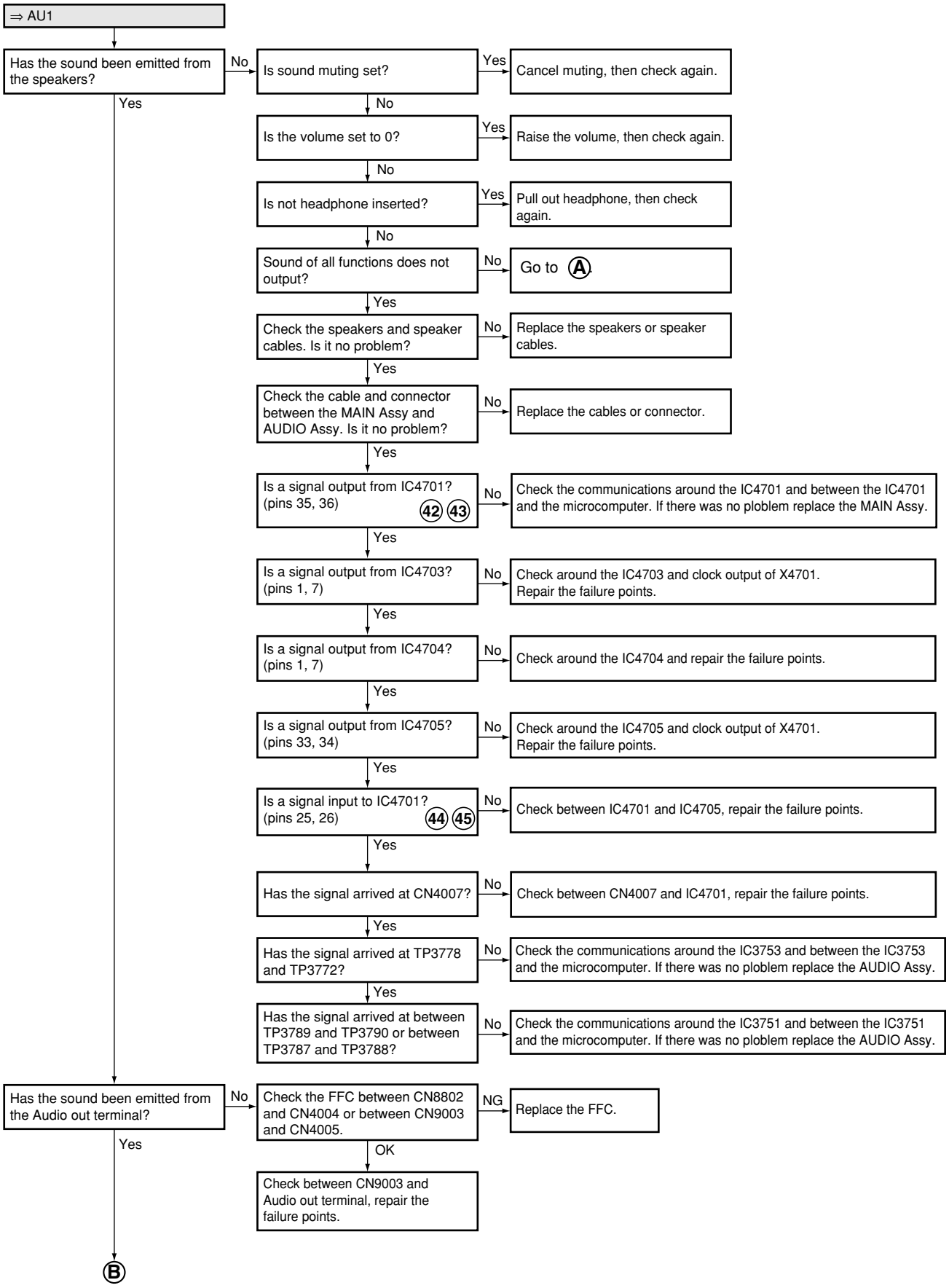

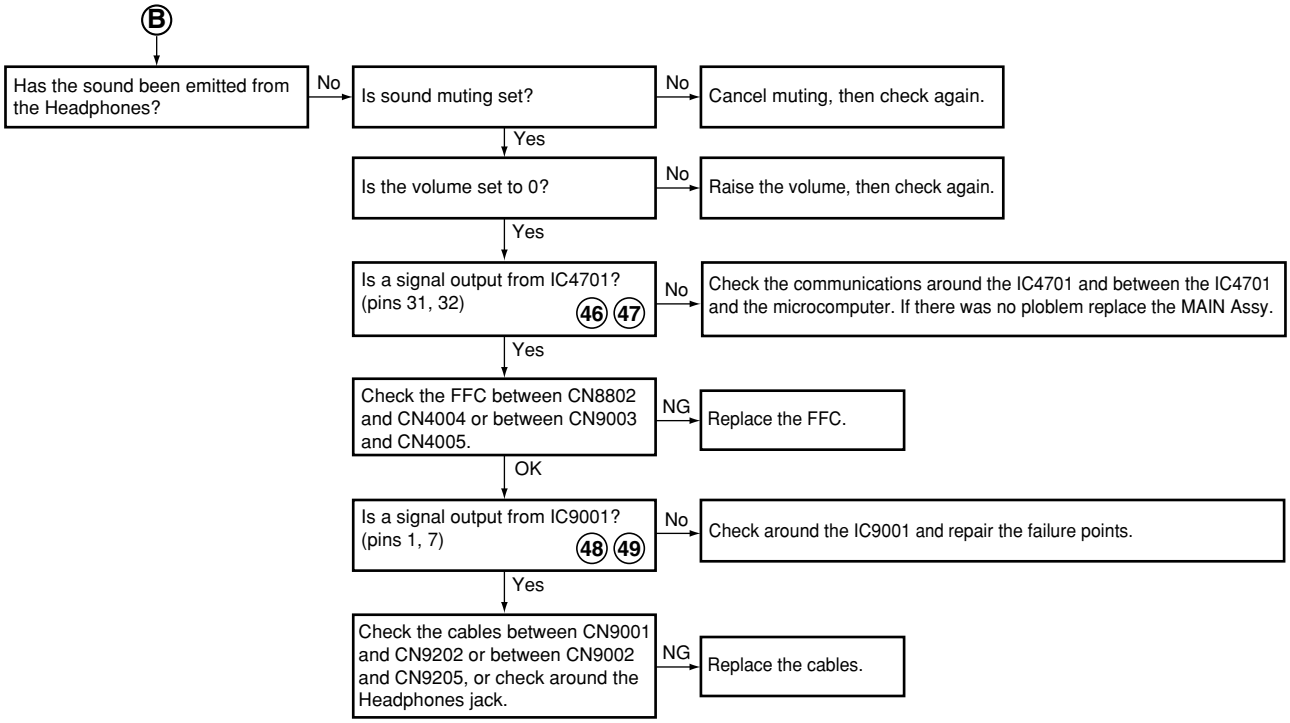

● Waveforms

Input signal: L/R 1 kHz

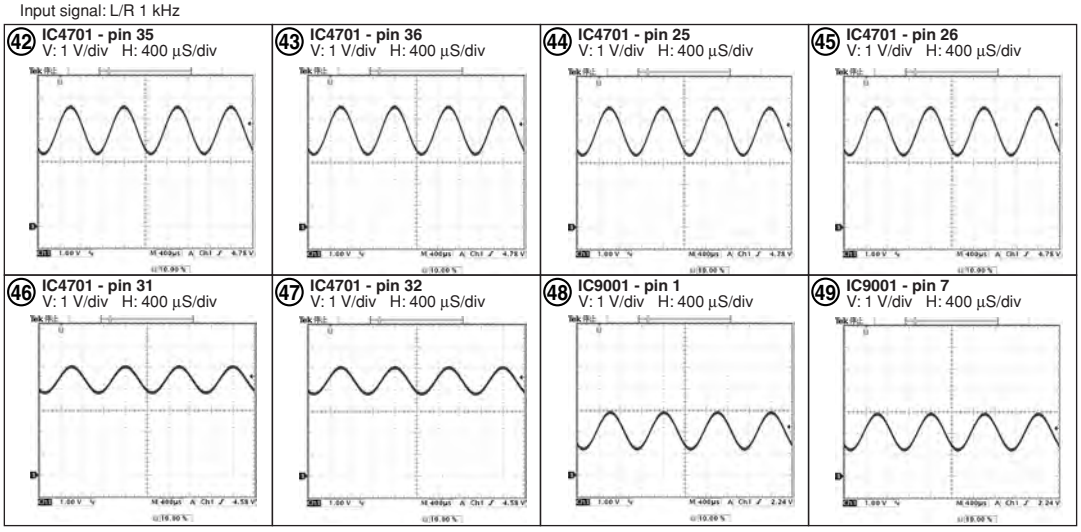

Flowchart of Failure Analysis for The Audio System

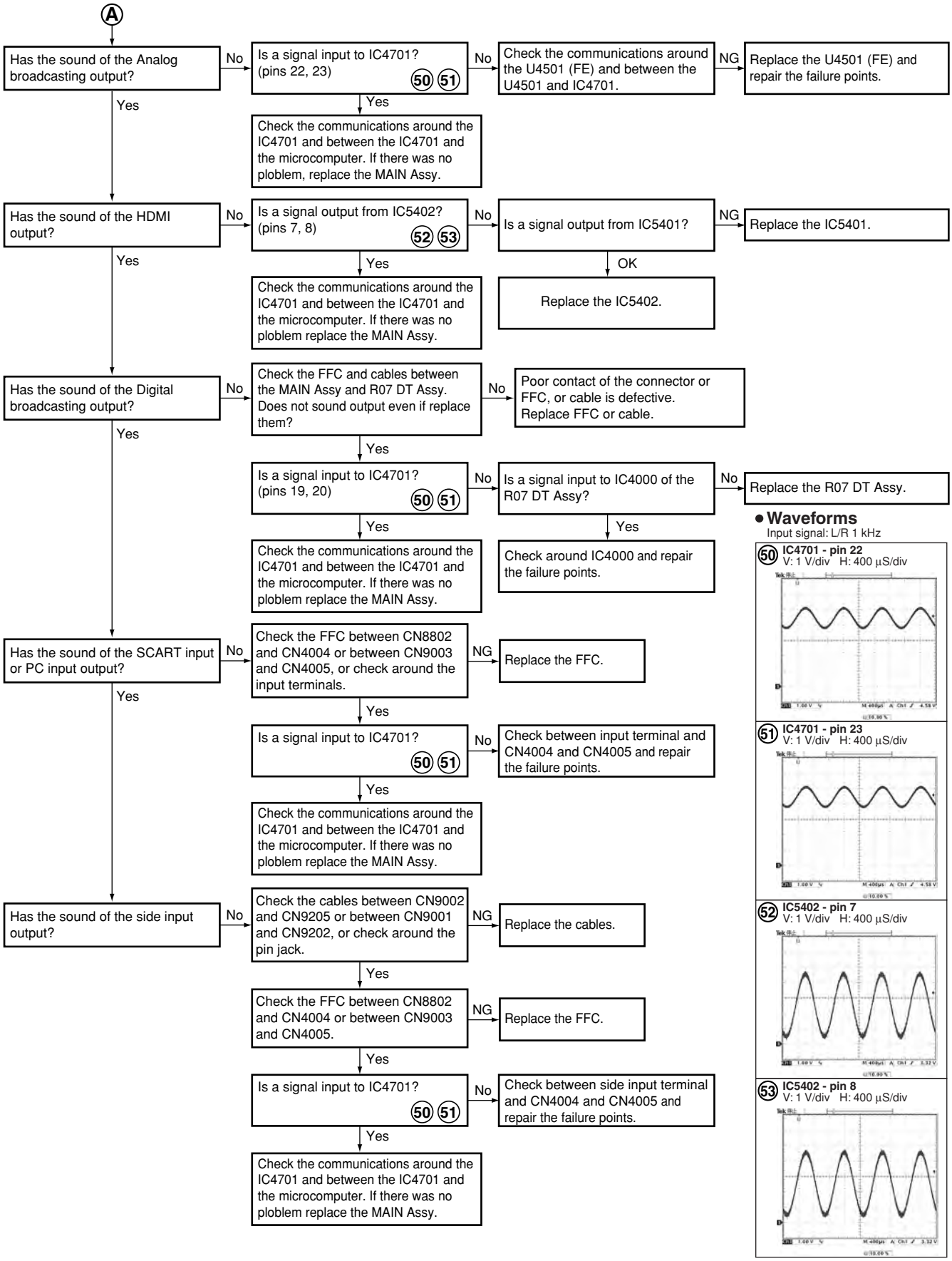

● Waveforms

Input signal: L/R 1 kHz

50 IC4701 - pin 22
V: 1 V/div H: 400 µS/div

51 IC4701 - pin 23
V: 1 V/div H: 400 µS/div

52 IC5402 - pin 7
V: 1 V/div H: 400 µS/div

53 IC5402 - pin 8
V: 1 V/div H: 400 µS/div

5.2 DIAGNOSIS OF PD (POWER-DOWN)

5.2.1 BLOCK DIAGRAM OF THE POWER-DOWN SIGNAL

Note:
The figures ② to ⑪ indicate the number of times the LED flashes when power-down occurs in the corresponding route.

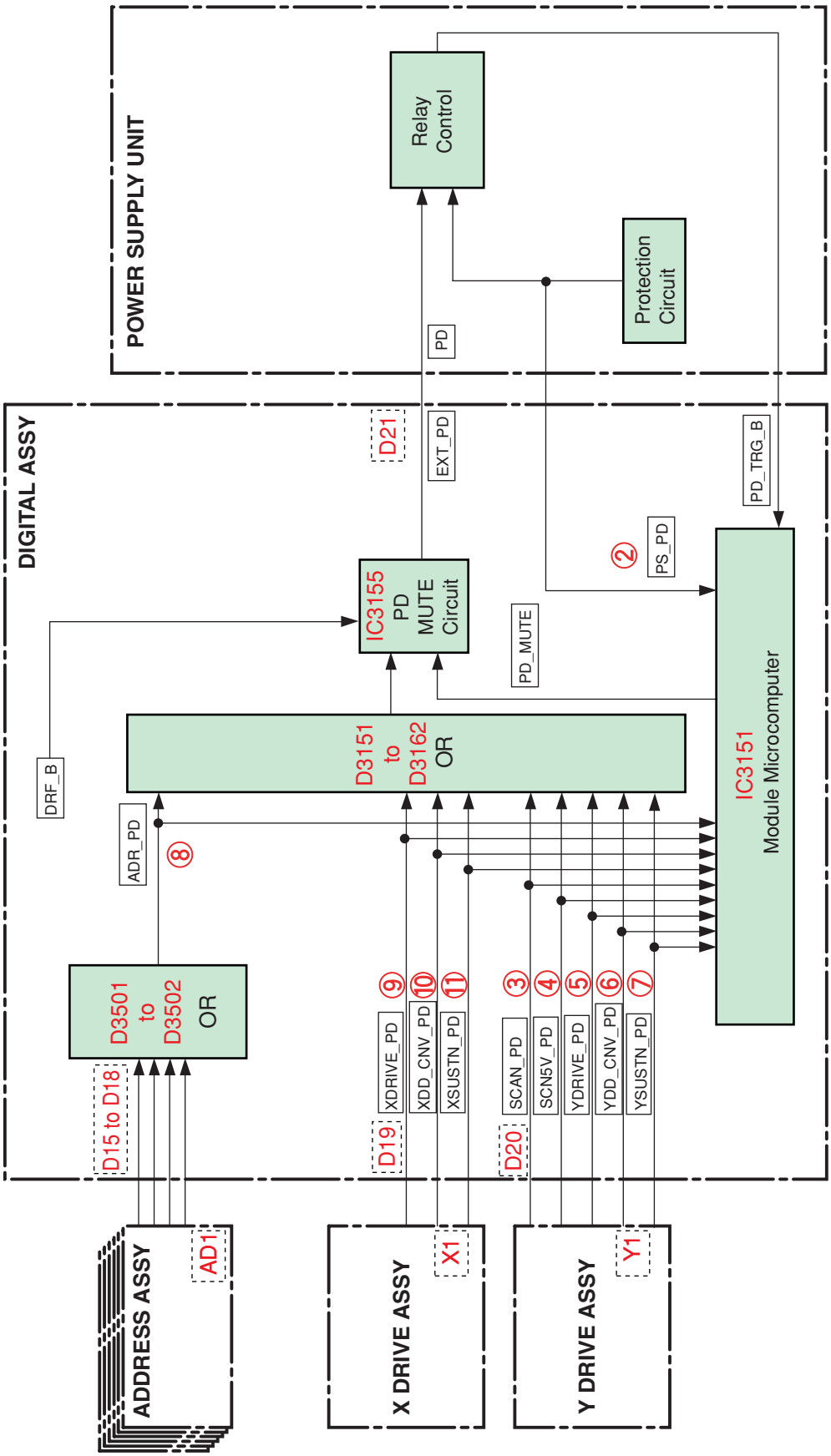

5.2.2 DIAGNOSIS OF THE PD (POWER-DOWN)

■ Prediction of failure symptoms when a PD (power-down) is generated

LED Flashing Count	PD Circuit	Checkpoint	Main Cause
2	Power supply PD	POWER SUPPLY Unit	Failure in the POWER SUPPLY Unit
3	SCAN PD	SCAN A, B Assy	SCAN IC is damaged (short-circuiting between VH and GNDH)
		Y DRIVE Assy	Connectors disconnected between the POWER SUPPLY Unit and the Y DRIVE Assy Connectors disconnected between the DIGITAL and the Y DRIVE Assys Failure in the VH power
4	IC5V PD	SCAN A, B Assy	SCAN IC is damaged (short-circuiting between IC5V and GNDH)
			Disconnection of the scan-bridge (15-pin) connector
		Y DRIVE Assy	Failure in the photo coupler
			Abnormality in the IC5V DC/DC converter
5	Y-DRIVE PD	Y DRIVE Assy	Abnormality in the 16.5 V power
6	Y DCDC PD	Y DRIVE Assy	Abnormality in the VOFS DC/DC converter
			Abnormality in the VPRST DC/DC converter
			Abnormality in VC_15V DC/DC converter
7	Y SUS PD	Y DRIVE Assy	Abnormality in the DK module
			Abnormality in the control signal line
8	Address PD	ADDRESS Assy	Short-circuiting of Vadr TCP damaged
9	X-DRIVE PD	X DRIVE Assy	Connectors disconnected between the DIGITAL and the X DRIVE Assys
			Abnormality in the 16.5 V power
10	X DCDC PD	X DRIVE Assy	Abnormality in VC_15V power
			Abnormality in VXNRST power
11	X SUS PD	X DRIVE Assy	Abnormality in the DK module
			Abnormality in the control signal line
			Connectors disconnected between the POWER SUPPLY Unit and the X DRIVE Assy

■ How to distinguish which connector is disconnected

Assy	Connector	To which Assy the Connector is Connected	Frequency of LED Flashing	Screen Display
X DRIVE Assy	CN1001	DIGITAL Assy	11 (XDRIVE)	–
	CN1204	POWER SUPPLY Unit (ADR system power)	–	White (left half of the screen)
	CN1206	POWER SUPPLY Unit (drive system power)	12 (X-SUS)	–
	CN1201, CN1202, CN1203, CN1205	ADDRESS Assy	8 (ADR)	–
Y DRIVE Assy	CN2001	DIGITAL Assy	3 (SCAN)	–
	CN2351	POWER SUPPLY Unit (drive system power)	3 (SCAN)	–
	CN2353	POWER SUPPLY Unit (ADR system power)	–	White (right half of the screen)
	CN2354, CN2355, CN2356, CN2357	ADDRESS Assy	8 (ADR)	–
	CN2401, CN2402	SCAN A, B Assy	4 (SCN-5V)	–
SCAN A, B Assy	CN2701, CN2801	Y DRIVE Assy	4 (SCN-5V)	–
ADDRESS Assy	CN1502, CN1702	DIGITAL Assy	8 (ADRS)	–
	CN1501, CN1701	X DRIVE Assy, Y DRIVE Assy	8 (ADRS)	–

■ How to identify the cause of a power-down that is indicated by 2-times flashing of the red LED

The cause of a power-down that is indicated by 2-times flashing of the red LED can be identified by performing the steps ① to ③ below:
① Visual check with the power off
② Tester check with the power off
③ Check with the power on

① Status check with the power off

Check if the cables and FFC cables that are connected to the Y DRIVE Assy are firmly connected.

② Tester check with the power off

1. Check between Vsus and SUSGND with a tester

Disconnect all cables from the X and Y DRIVE Assys and check if there is short-circuiting between Vsus and SUSGND in the X and Y DRIVE Assys.

- How to check if there is short-circuiting on the X DRIVE Assy:
  If there is short-circuiting between Vsus and SUS OUT, and SUS OUT and SUSGND, the X Mask Module is damaged.
  If they are not short-circuited, check other elements to see if they are short-circuited.

- How to check if there is short-circuiting on the Y DRIVE Assy:
  If there is short-circuiting between Vsus and SUS OUT, and SUS OUT and SUSGND, the Y Mask Module is damaged.
  If they are not short-circuited, check other elements to see if they are short-circuited.

- Check for short-circuiting in the Power supply.

Note that at the beginning of measuring with a tester, charging of an electrolytic capacitor may cause a phenomenon like short-circuiting. However, the resistance will soon rise if there is no short-circuiting.

2. Check for short-circuiting between VH and PSUS with a tester

Disconnect the cables that connect the bridge connectors between the Y DRIVE Assy and upper and lower SCAN Assys.

- If there is short-circuiting in the upper SCAN Assy, one of Scan ICs in the upper SCAN Assy is damaged.
- If there is short-circuiting in the lower SCAN Assy, one of Scan ICs in the lower SCAN Assy is damaged.
- If there is short-circuiting in the Y DRIVE Assy, a circuit in the Y DRIVE Assy is short-circuited.

If no short-circuiting is detected up to this stage, the power-down in question is proved not to be caused by short-circuiting. Therefore, it is assumed that the power-down occurred because power had not been supplied to Vsus or VH for some reason.

③ Check immediately after the unit is turned on before a power-down occurs.

If the Vsus voltage does not increase, the POWER SUPPLY Unit is in failure.
If the VH voltage does not increase, the VH DC/DC converter in the Y DRIVE Assy is in failure.

④ Check the PD detection circuit.

If no problem is detected in steps ① to ③, a power-down occurred even though the voltage was normal.
Therefore, the PD detection circuit may be in failure.

By following the above procedures, the real cause of a power-down can be judged.

X Drive PD system

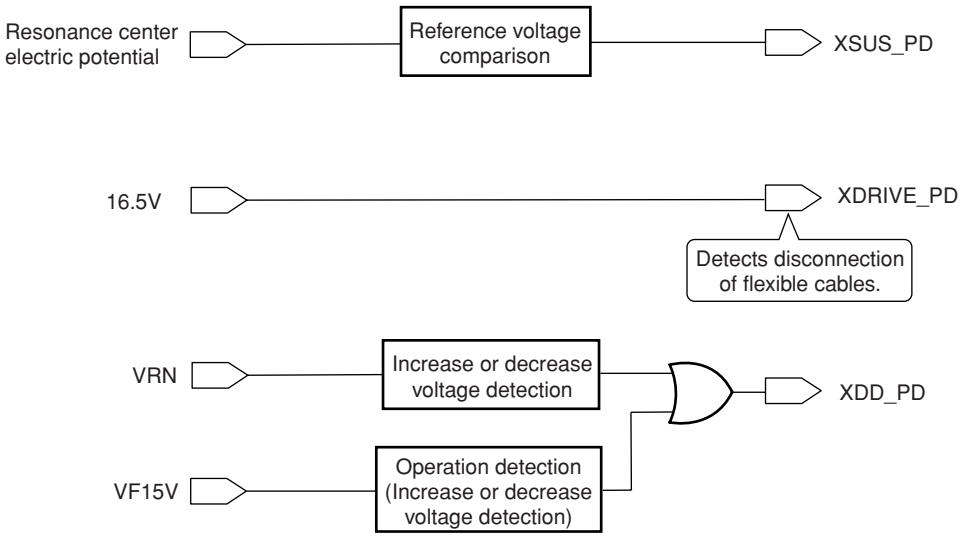

Y Drive PD system

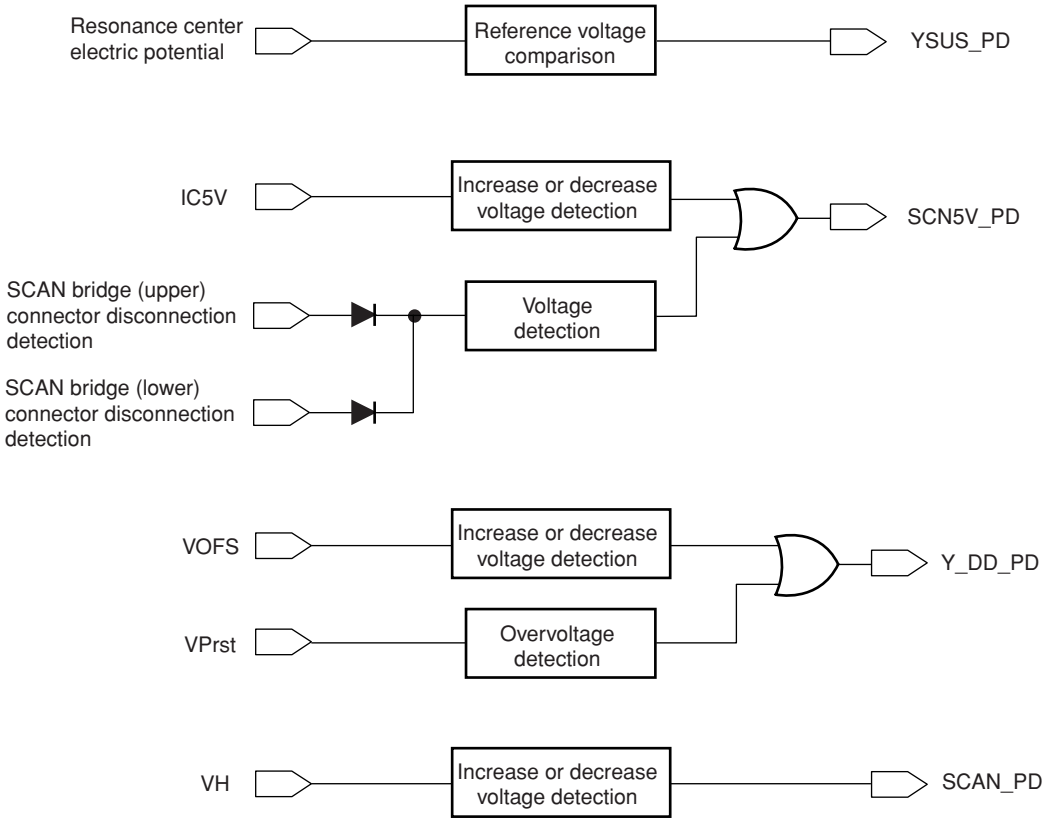

5.3 DIAGNOSIS OF SD (SHUTDOWN)

5.3.1 BLOCK DIAGRAM OF THE SHUTDOWN SIGNAL

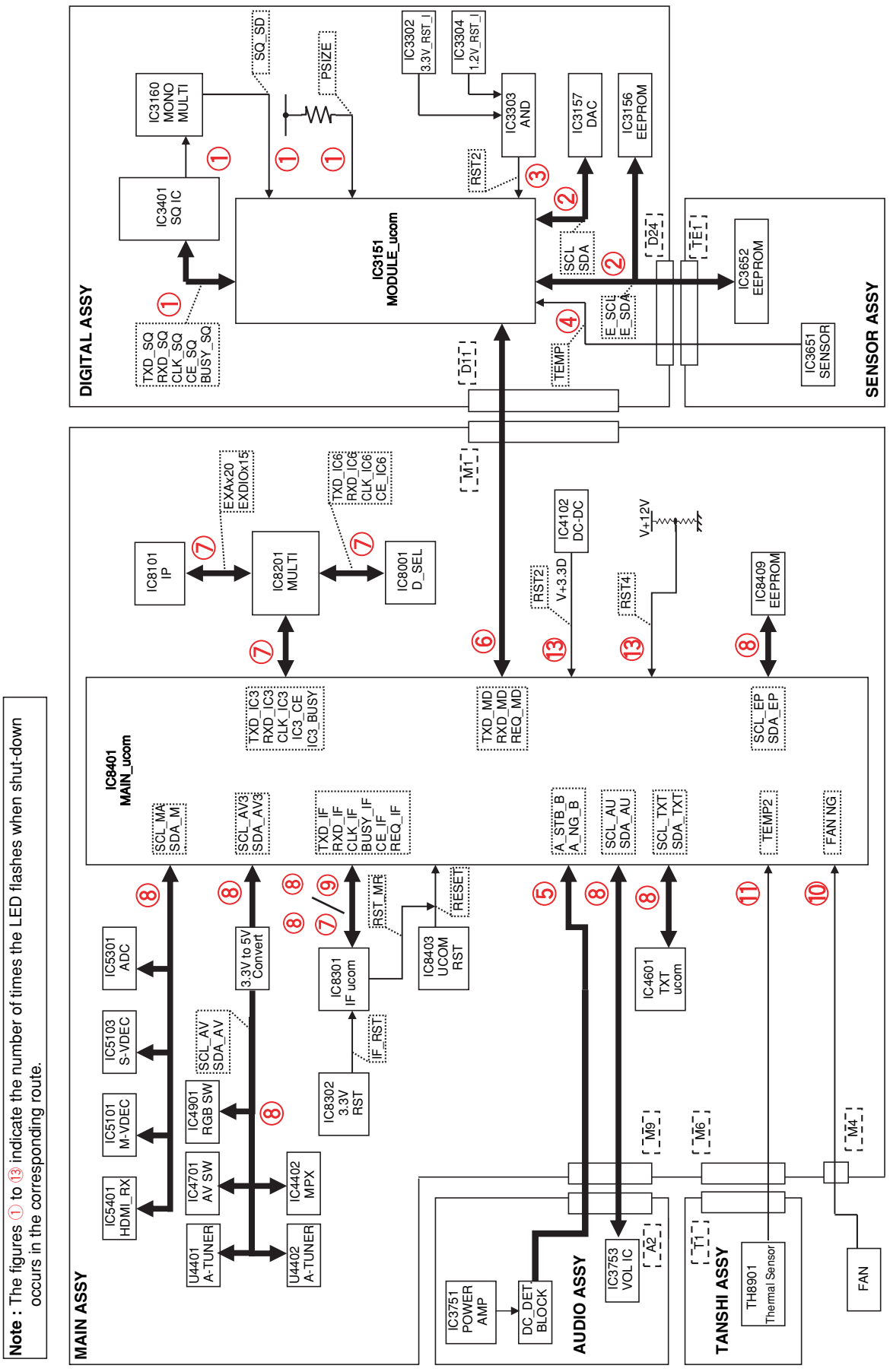

Note : The figures ① to ⑬ indicate the number of times the LED flashes when shut-down occurs in the corresponding route.

Frequency of LED Flashing	Major Type	Detailed Type	Log Indication in Factory Mode		Checkpoint	Possible Defective Part	Remarks
			MAIN	SUB			
Blue 1	Abnormality in the Sequence Processor	Communication error	SQ-IC	RTRY	CLK_SQ/TXD_SQ, etc.	IC3151, IC3401	SQ_IC communication not established
		Drive stop		SQNO	Check if the video sync signal is input to IC3401.	CN3001, IC3401	If the signal detection by the module microcomputer is properly performed, the unit operates on an external sync.
		Busy		BUSY	BUSY_SQ	IC3401	If BUSY_SQ remains high, a shutdown is generated.
		Incoherent version (hardware, software)		VER-HS	Check the model number of the DIGITAL Assy and the destination of the sequence processor.	IC3301, IC3401	The written SQ_PROG is incoherent with data on the DIGITAL Assy.
Blue 2	Failure in IIC communication with the module microcomputer	DIGITAL Assy EEPROM	MD-IIC	EEPROM	IIC communication line of IC3156	IC3151, IC3156	Check the pull-up resistor of the IIC control line and the power to the corresponding IC.
		SENSOR Assy EEPROM		BACKUP	IIC communication line of IC3652	IC3151, IC3652	Check the pull-up resistor of the IIC control line and the power to the corresponding IC.
		DAC		DAC	IIC communication line of IC3157	IC3151, IC3157	Check the pull-up resistor of the IIC control line and the power to the corresponding IC.
Blue 3	Abnormality in RST2 power decrease	–	RST2	–	Is the output voltage of the DC-DC converter low?	AXY1135	If RST2 does not become high after the unit is turned on, a shutdown will be generated in several seconds.
					The 12 V power is not output.	POWER SUPPLY Unit	Check if V + 12 V is started.
Blue 4	High temperature of the panel	–	TMP_NG	TEMP1	Ambient temperature	–	If TEMP1 that is read by the module microcomputer is 75°C or higher, a shutdown will be generated.
					Abnormality in the panel temperature sensor	IC3651	Check the connection with the SENSOR Assy.
Blue 5	Short-circuiting of the speakers	–	AUDIO	–	Speaker terminals	CN3753, CN3901, JA3901	Check if any speaker cable is in contact with the chassis.
					AUDIO_AMP	IC3751	Check if the AMP output is short-circuited.
					Periphery of the cable between A2 and M8	CN3752, CN4007	Check if cables are firmly connected.
Blue 6	Failure in communication with the module microcomputer	–	MODULE	–	Communication line between MAIN and MOD	IC3151, IC8401	Check the communication lines (RXD_MOD/RXD_MOD/REQ_MOD).
					Periphery of the cable between D11 and M2	CN3001, CN4001	Check if cables are firmly connected.
Blue 7	Failure in main microcomputer 3-wire serial communication	IF microcomputer	MA-SRL	IF	Communication line between IF and MAIN	IC8301, IC8401	Check the communication lines (TXD_IF/RXD_IF/CLK_IF/BUSY_IF/CE_IF/REQ_IF).
		MULTI		MULTI	Communication line between MULTI_M and MAIN	IC8201, IC8401	Check the communication lines (TXD_IC3/RXD_IC3/CLK_IC3/CE_IC3/IC3_BUSY).
				I/P	Bus communication line between IP and MULTI_M	IC8101, IC8201	Check the communication lines (EXA/EXDIO).
				D_SEL	Communication line between D_SEL and MULTI_M	IC8001, IC8201	Check the communication lines (TXD_IC6/RXD_IC6/CLK_IC6/CE_IC6).
Blue 8	Failure in IIC communication with the main microcomputer	AV Switch	MA-IIC	AV-SW	IIC communication line between AV_SW and MAIN	IC4701, IC8401	Check the communication lines (SCL_AV3/SDA_AV3 or SCL_AV/SDA_AV).
		RGB Switch		RGB-SW	IIC communication line between RGB_SW and MAIN	IC4901, IC8401	Check the communication lines (SCL_AV3/SDA_AV3 or SCL_AV/SDA_AV).
		Analog Tuner		FE1	IIC communication line between A_Tuner and MAIN	U4401, IC8401	Check the communication lines (SCL_AV3/SDA_AV3 or SCL_AV/SDA_AV).
		Sub VDEC		S-VDEC	IIC communication line between S_VDEC and MAIN	IC5103, IC8401	Check the communication lines (SCL_MA/SDA_MA).
		MPX		MPX	IIC communication line between MPX and MAIN	IC4402, IC8401	Check the communication lines (SCL_AV3/SDA_AV3 or SCL_AV/SDA_AV).
		Main VDEC		M-VDEC	IIC communication line between M_VDEC and MAIN	IC5101, IC8401	Check the communication lines (SCL_MA/SDA_MA).
		AD/PLL		ADC	IIC communication line between ADC and MAIN	IC5301, IC8401	Check the communication lines (SCL_MA/SDA_MA).
		HDMI		HDMI	IIC communication line between HDMI_RX and MAIN	IC5401, IC8401	Check the communication lines (SCL_MA/SDA_MA).
		TXT		TXT	IIC communication line between TXT and MAIN	IC4601, IC8401	Check the communication lines (SCL_TXT/SDA_TXT).
		64K EEPROM		MA-EEP	IIC communication line between EEPROM and MAIN	IC4801, IC8401	Check the communication lines (SCL_TXT/SDA_EP).
		VOLUME IC		AUDIO	IIC communication line between VOL_IC and MAIN	IC3753, IC8401	Check the communication lines (SCL_AUDIO/SDA_AUDIO).
		VOLUME IC		AUDIO	Periphery of the cable between A2 and M9	CN3752, CN4007	Check if cables are firmly connected.
Blue 9	Failure in communication with the main microcomputer and unknown	–	MAIN	–	Communication line between IF and MAIN	IC8301, IC8303, IC8304, IC8401	Check the communication lines (TXD_IF/RXD_IF/CLK_IF/BUSY_IF/CE_IF/REQ_IF).
Blue 10	Failure in the fan	–	FAN	–	Dirt attached to the fan motor	–	Check the fan.
					Periphery of the cable between fan and M4	CN4009	Check if cables are firmly connected.
					Periphery of the fan control regulator	IC8407	–
Blue 11	High temperature of the unit	–	TEMP2	–	Temperature sensor or its periphery	–	A shutdown is generated if TEMP2 becomes higher than 53°C
					Periphery of the temperature sensor	TH8801, Q8806	TEMP2
					Periphery of the cable between T1 and M6	CN8804, CN4005	Check if cables are firmly connected.
Blue 12	Digital Tuner The unit will not be shut down. the log is recorded	–	DTUNER		Failure in the system IC or its peripheral circuit	IC2000	Check for short-circuited/open communication line (M12 TXD_DT/RXD_DT)
Blue 13	Failure in the POWER SUPPLY Unit	DC-DC converter power decrease	MA-PWR	M-DCDC	DC-DC converter or its periphery, RST2	IC4102, Q4106	Check if V + 3.3 V is started.
		POWER SUPPLY		RELAY	The 12 V power is not output, RST4	–	Check if V + 12 V is started.
					Periphery of the cable between P8 and M2	CN4002	Check if cables are firmly connected.

5.4 INFORMATION ON SYMPTOMS THAT DO NOT CONSTITUTE FAILURE

■ Information on symptoms that do not constitute failure

Symptom	Cause, item to check, information
HDMI: Symptoms concerning the input format and settings	
The picture color for an INPUT 3 or 4 signal is not correct.	The color setting for INPUT 5 or 6 is not compatible with that of the output equipment. Check whether the color setting is YPbPr or RGB.
The video signal to INPUT 3 or 4 is not displayed, and a message is displayed.	A unsupported video signal is input. Example: 1080p @ 60Hz
The audio signal input to the INPUT 3 or 4 pin jack is not output.	The audio setting for INPUT 5 or 6 is "AUTO," and a video signal is not input. If the audio setting is "AUTO," to output an analog audio signal, the DVI signal must be input via a DVI-HDMI conversion cable. When the DVI equipment is connected, the analog signals are selected with the setting "AUTO."
No sound of signals to INPUT 3 or 4 is output.	The setting on the side of the HDMI output equipment is wrong. Example: Dolby Digital
MONITOR video output	
The video output signal from the MONITOR connector is deteriorated. Or when the video output signal from the MONITOR connector is recorded, its playback picture is deteriorated.	The video signal output from the MONITOR connector is Macrovision protected.
The video signal is not output when the component signal is input to INPUT 2.	The video signal is not output from the MONITOR connector when the component signal is selected.
The video signal is not output when the video signal is input to INPUT 3 or 4.	The video signal is not output from the MONITOR connector when the HDMI signal is selected.
MONITOR audio output	
The image displayed on the PDP is not synchronized with the sound from the MONITOR audio output.	The audio signal from the MONITOR connector is synchronized with the video output signal from the MONITOR connector.
DIGITAL audio output	
Playback of the signal from the DIGITAL audio output connector is possible, but recording is not possible.	The video signal output from the DIGITAL connector is copy-protected.
The video output signal from the DIGITAL connector is not synchronized with that from the MONITOR video output.	The digital audio output signal from the DIGITAL connector is synchronized with the video signal that is currently displayed, and not with the MONITOR video output.
Miscellaneous	
The no-signal off function is not activated.	The no-signal off function is effective only while a video signal is being input.
The no-operation off function is not activated.	The no-operation off function is effective only while a video signal is being input.
Power management does not function.	Power management is effective only while a signal is being input from a PC.
The AUTO SETUP function is not activated.	The AUTO SETUP function is effective only while a signal is being input from a PC.
• • • •	
Control via the SR connector is not possible.	A failure in the G-Link system or wrong connection of the cable to the SR audio connector is suspected.
The audio signal from the PC is not output.	A failure in the G-Link system or wrong connection of the cable to the PC connector is suspected.
The picture-quality setting (AV Selection) is not stored.	The picture-quality setting is stored for each input. As the setting is changed when another input is selected, the user may have a false idea that the setting is not stored.
The picture size changes arbitrary.	The Auto Size setting is set to ON (default is OFF).
The display position of the screen slightly changes every time the unit is turned on.	The orbiter function for minimizing the effects of phosphor burn is activated. As ON/OFF of this function can only be changed on the Integrator menu, turning off of this function by a user is not possible.
The video signal to the S video connector is not displayed.	Although S video input is selected on the menu, the cable is connected via a component video input connector whose function type is the same as S video input.
The video signal to the composite video connector is not displayed.	Although the composite video input is selected on the menu, the cable is connected via a component video connector or S video connector whose function type is the same as the composite video input.

SUPPLEMENT: On the video setting for HDMI

There are three types of HDMI output formats: color difference 4:4:4, color difference 4:2:2, and RGB4:4:4.
(The proportions, such as 4:4:4 and 4:2:2, represent those of the amount of data for video signal components. For example, as for color difference 4:4:4, the proportion of the amount of data as for Y, Cb, and Cr is 4:4:4.)

It is required to make the settings of the PDP according to the settings of the output equipment. For usual operation, however, set them to AUTO. If the color is inappropriate, make the settings manually.
In the HDMI system, video signals are coded at 24 bits per pixel and transmitted as a series of 24-bit pixels. In a case of color difference 4:4:4, Y, Cb, and Cr use 8 bits each. In a case of color difference 4:2:2, Y, Cb, and Cr use 12 bits each, but Cb and Cr are transmitted at a half sampling rate of Y. This unit is capable of processing the upper 10 bits out of 12 bits of video data. Recent high-end DVD players, such as Pioneer DV-79AVi, are capable of outputting 10-bit color-difference signals. In general, it is said that picture quality for color difference 4:2:2 format is assumed to be higher, because human eyes are more sensitive to luminance than to colors. In the case of RGB4:4:4, R, G, and B use 8 bits each.

6. DISASSEMBLY

6.1 PCB LOCATION

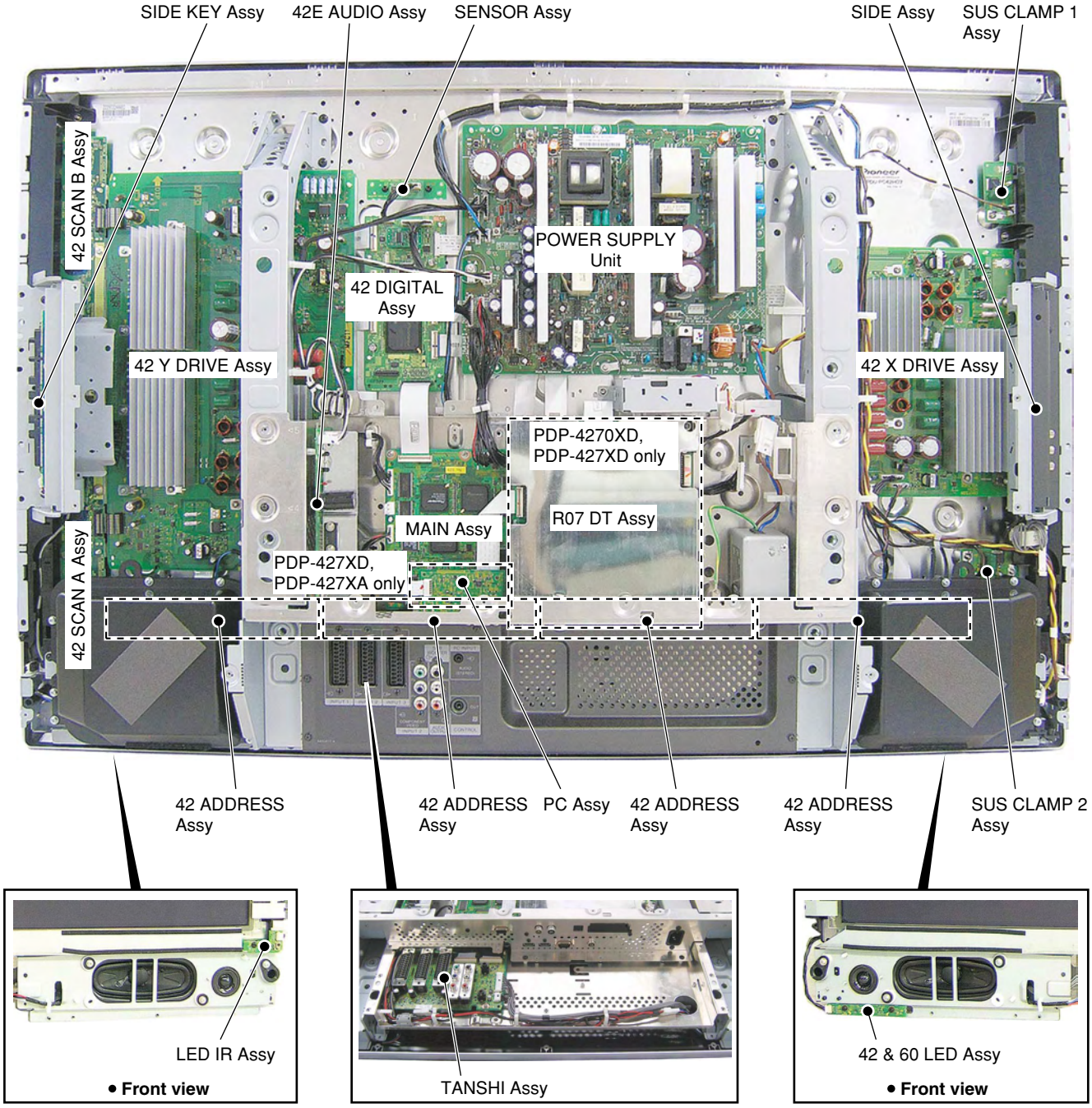

6.2 DISASSEMBLY

Note: Even if the unit shown in the photos and illustrations in this manual may differ from your product, the procedures described here are common.

Chart of removal order for the main parts and boards

It is efficient to proceed with removal of the main parts and boards in the order shown in the chart below:

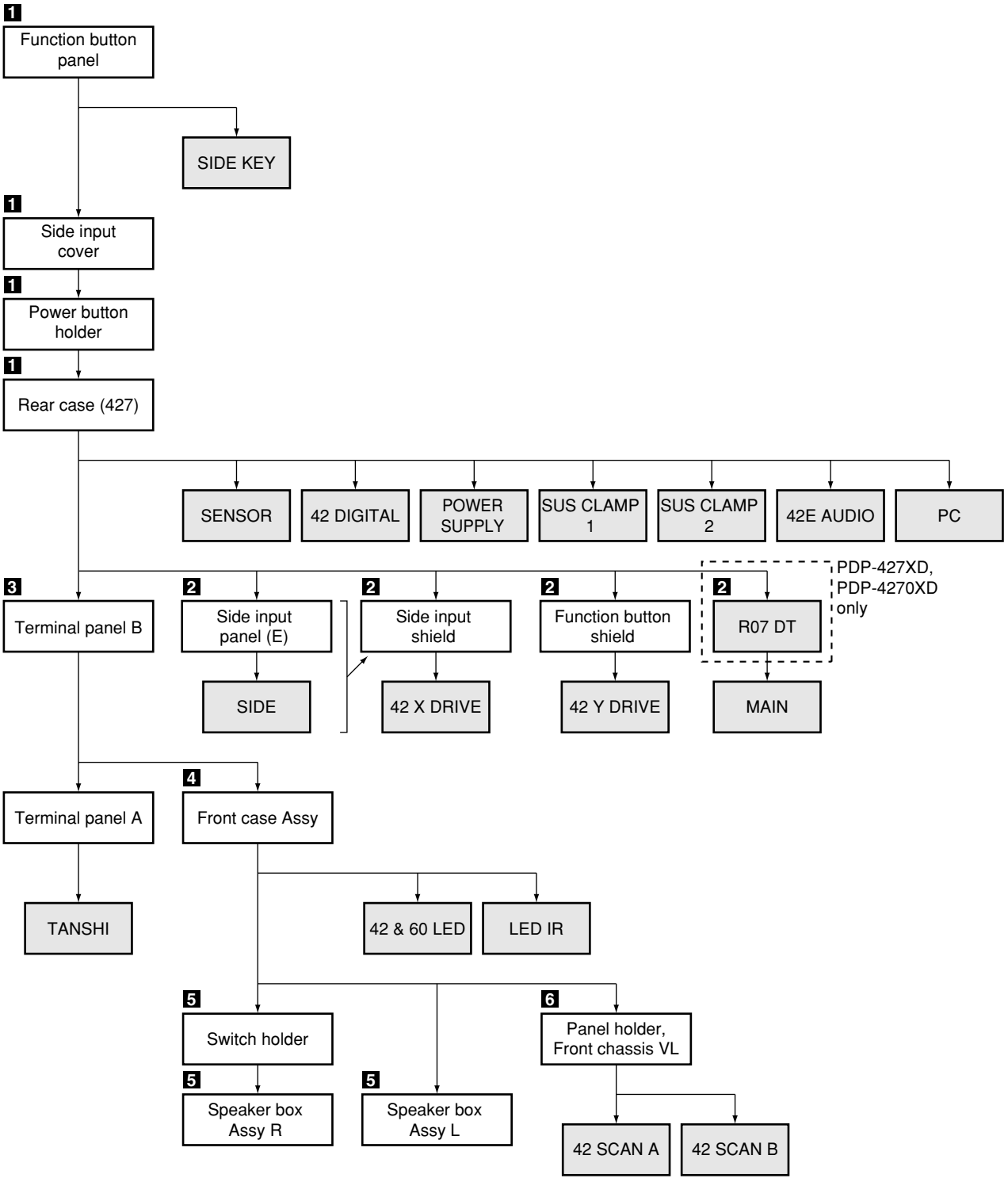

Disassembly

1 Rear Case (427)

● **Function button panel**

① Remove the two screws.

② Remove the function button panel.

● **Side input cover**

③ Remove the two screws.

④ Remove the side input cover.

● **Power button holder**

⑤ Remove the two screws.

⑥ Remove the power button holder.

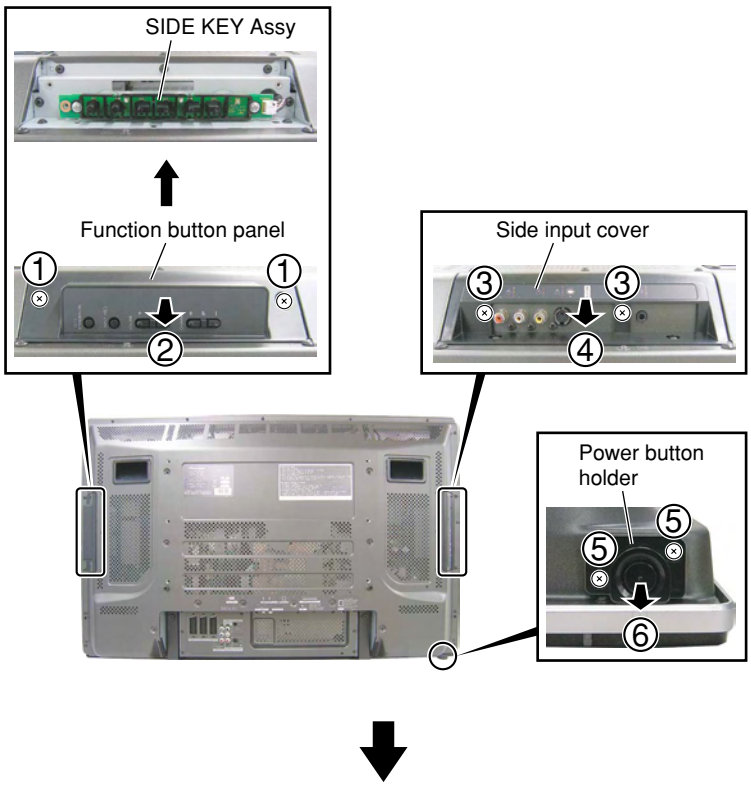

● **Rear case (427)**

① Remove the two protection sheets C.

② Remove the 23 screws. (AMZ30P060FTB)

③ Remove the nine screws. (TBZ40P080FTB)

④ Remove the four screws. (ABA1332)

⑤ Remove the four screws. (ABA1353)

⑥ Remove the one screw. (ABA1341)

⑦ Remove the rear case (427).

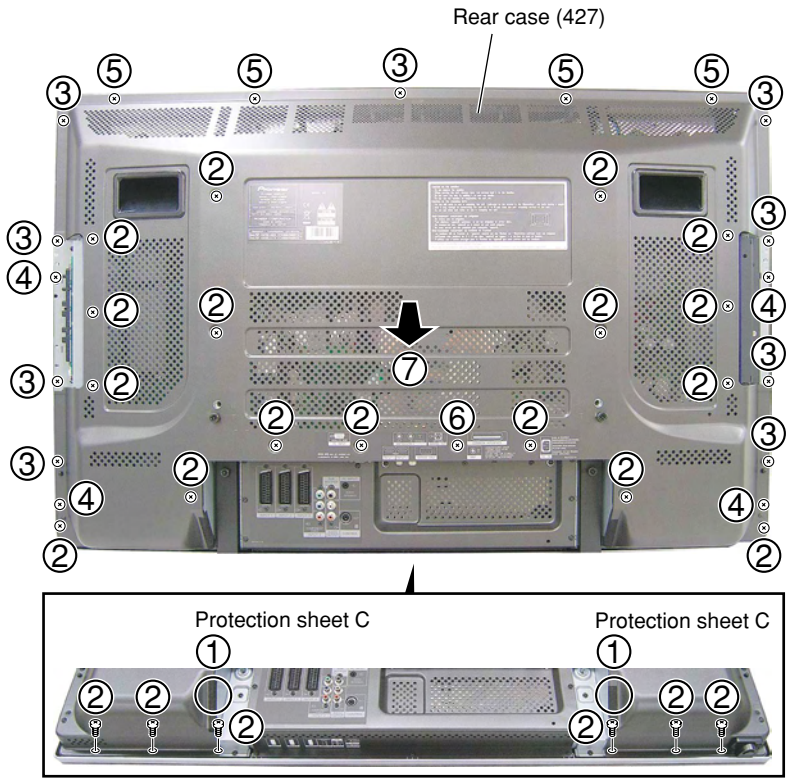

2 Access to PCB Assys

● **SIDE Assy**

① Remove the four screws.
② Remove the two screws.
③ Remove the three screws.
④ Remove the side input panel (E).

● **42 X DRIVE Assy**

① Remove the two screws.
② Remove the side input shield with PCB.

● **42 Y DRIVE Assy**

① Remove the two screws.
② Remove the function button shield with PCB.

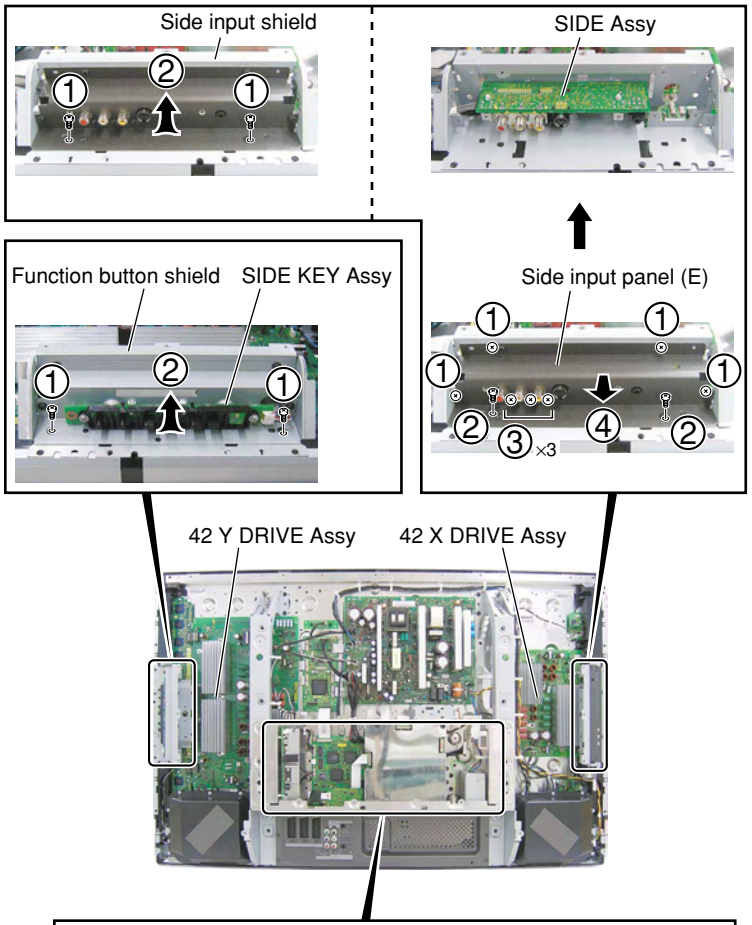

● **MAIN Assy**

① Disconnect cables, connectors, as required.
② Remove the POD cover.
③ Remove the two screws.
④ Remove the two screws.
⑤ Remove the R07 DT Assy.

PDP-427XD, PDP-4270XD only

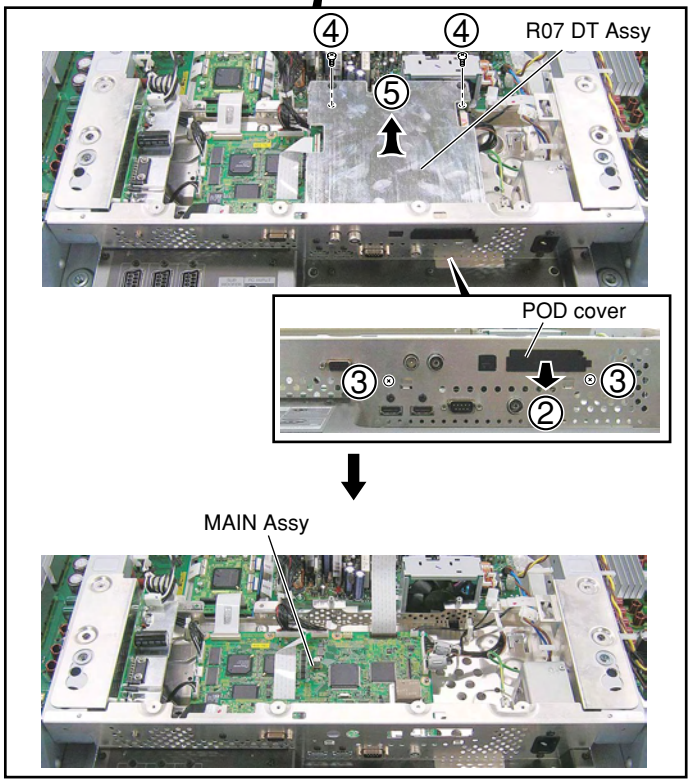

PDP-427XD

3 Terminal Panel B

① Remove the 10 screws.
② Remove the 10 screws.
③ Remove the three screws.
④ Remove the terminal panel B.

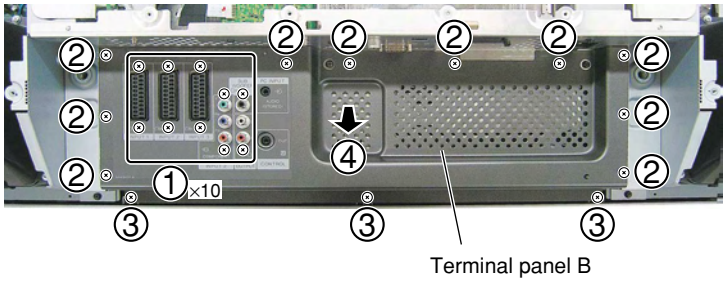

4 Front Case Assy

① Remove the one screw.
② Remove the two screws.

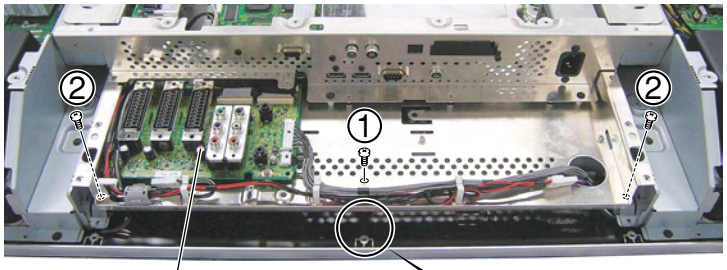

③ Pull the lower part of the Front case Assy toward you and out.
④ Remove the Front case Assy, by pulling it upward.

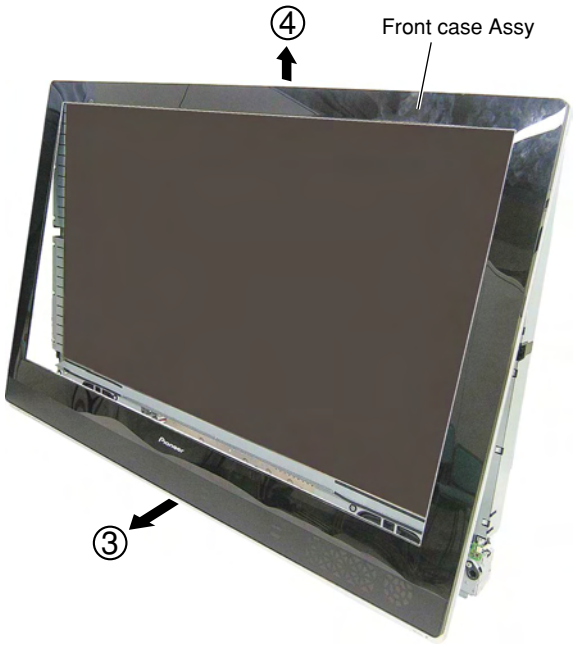

5 Speaker Box Assy L and R

● **Speaker Box Assy L**

① Disconnect cables, connectors, as required.
② Remove the two screws.
③ Remove the one screw.
④ Remove the one screw.
⑤ Remove the speaker box Assy L.

● **Speaker Box Assy R**

① Remove the one screw.
② Remove the switch holder.
③ Disconnect cables, connectors, as required.
④ Remove the two screws.
⑤ Remove the one screw.
⑥ Remove the one screw.
⑦ Remove the speaker box Assy R.

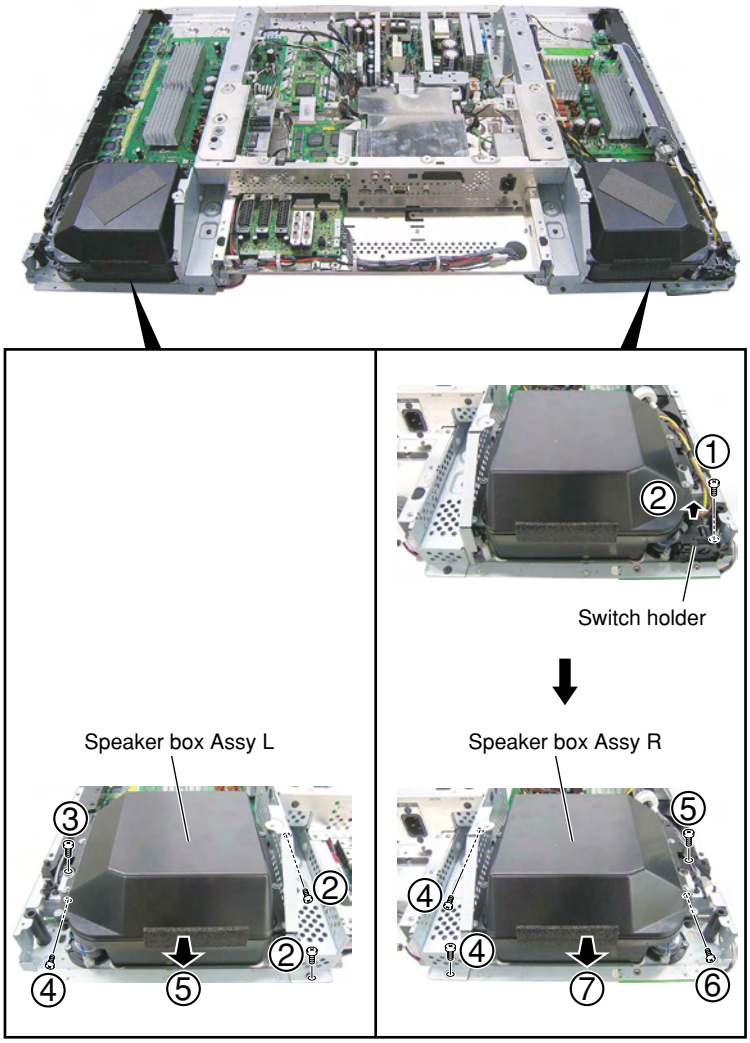

6 Exchange of SCAN IC

① Loosen the jumper wire.
② Remove the LED IR Assy by removing the one nyron rivet.
③ Remove the locking wire saddle.
④ Remove the two screws.
⑤ Unhook the six hooks.
⑥ Remove the panel holders V1 (427) and V2 (427).

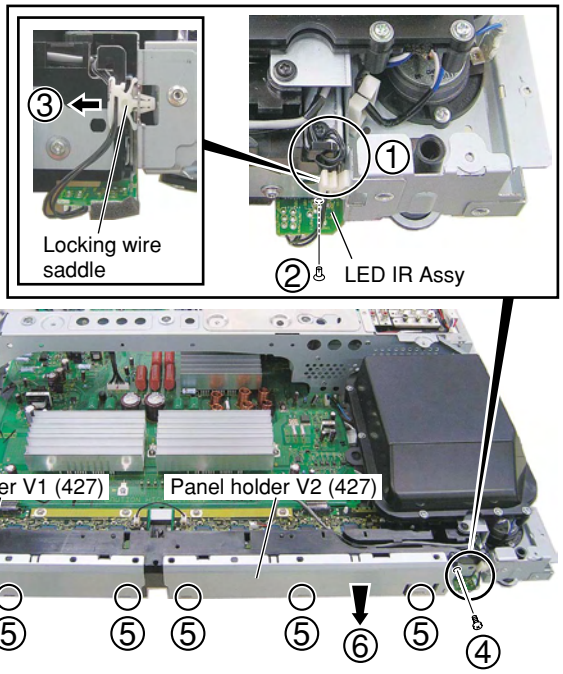

⑦ Remove the three screws.
⑧ Remove the front chassis VL (427).

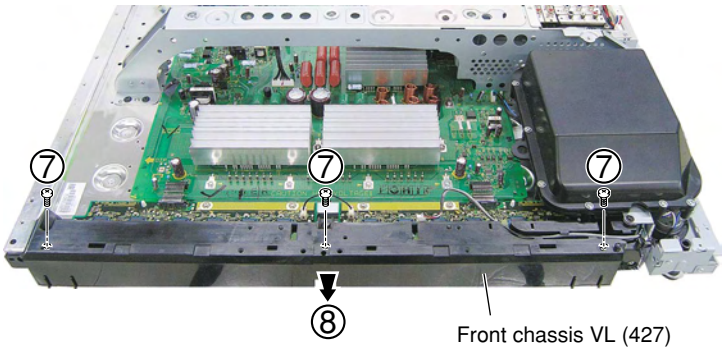

Exchange

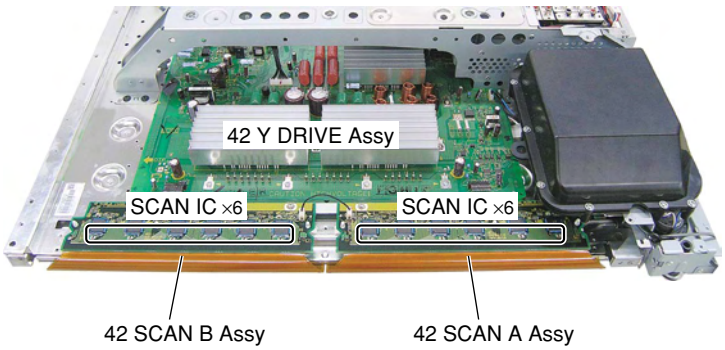

7. ADJUSTMENT

1. At shipment, the unit is adjusted to its best conditions. Normally, it is not necessary to readjust even if an assembly is replaced. If the adjustment is shifted or if it becomes necessary to readjust because of part replacement, etc., perform the adjustment as described below.
2. Any value changed in Service/Factory mode will be stored in memory as soon as it is changed. Before readjustment, take note of the original values for reference in case you need to restore the original settings.
3. Use a stable AC power supply.

7.1 ADJUSTMENT REQUIRED WHEN THE SET IS REPAIRED OR REPLACED

■ When any of the following assemblies is replaced

POWER SUPPLY Unit	➡	Refer to "7.4 HOW TO CLEAR HISTORY DATA".
DIGITAL Assy	➡	Writing of backup data is required. Refer to the "7.3 BACKUP WHEN THE PANEL UNIT IS ADJUSTED. "
X MAIN DRIVE Assy	➡	No adjustment required
X SUB DRIVE Assy	➡	No adjustment required
Y MAIN DRIVE Assy	➡	No adjustment required
Y SUB DRIVE Assy	➡	No adjustment required
Service Panel Assy	➡	Refer to "7.5 ADJUSTMENTS WHEN THE SERVICE PANEL ASSY IS REPLACED."
MAIN Assy	➡	Switching to SR+ from RS-232C
SENSOR Assy	➡	Writing of backup data is required. Refer to the "7.3 BACKUP WHEN THE PANEL UNIT IS ADJUSTED. "
TANSHI Assy	➡	No adjustment required
R07 DT Assy (PDP-427XD / 4270XD only)	➡	No adjustment required

7.2 ADJUSTMENT REQUIRED WHEN PART IS REPLACED

Notes on replacing parts

For the parts described in the list below, replacement is required for the whole Assy, not only the defective part.
If any part listed below is identified as defective and needs replacement, replace the whole Assy, and make necessary adjustments after replacement.

Reason: The whole Assy must be replaced, because adjustments and data rewriting for the Assy at the level of production line are required.

PCB Assy No.	Function Name	Parts that Require Whole-Assy Replacement		
		Ref No.	Function Name	Part No.
AWW1240	42 DIGITAL Assy	IC3151	Module microcomputer	AGC1011
		IC3401	Sequence IC	PEG239A
		IC3301	Flash memory	AGC1009
		IC3156	EEPROM	BR24L04FJ-W
AWW1140	SENSOR Assy	IC3652	EEPROM	BR24L02FJ-W
AWV2318 (PDP-427XD and PDP-427XA) AWV2320 (PDP-4270XD and PDP-4270XA)	MAIN Assy	IC4603	Flash ROM	AGC1020
		IC4701	AV switch	R2S11002AFT
		IC4901	RGB switch	R2S11001FT
		IC5101	MAIN VDEC	UPD64015GM-UEU
		IC5103	SUB VDEC	TVP5150AM1PBS
		IC5301	A/D Converter	AD9985KSTZ-110
		IC5403	EEPROM	BR24L02FJ-W
		IC5404	EEPROM	BR24L02FJ-W
		IC8202	Flash ROM	AGC1019
		IC8301	Flash UCOM	AGC1016
		IC8402	Flash ROM	AGC1018

POWER SUPPLY Unit	The assembly must be replaced as a unit, and no part replacement is allowed.
MAIN Assy	No adjustment is required after replacement of parts other than those mentioned above.
DIGITAL Assy	No adjustment is required after replacement of parts other than those mentioned above.
X MAIN DRIVE Assy	No adjustment is required after replacement of parts other than those shown in the following page.
X SUB DRIVE Assy	No adjustment required
Y MAIN DRIVE Assy	No adjustment is required after replacement of parts other than those shown in the following page.
Y SUB DRIVE Assy	No adjustment required
ADDRESS Assy	No adjustment required
SENSOR Assy	No adjustment is required after replacement of parts other than those mentioned above.
TANSHI Assy	No adjustment required
R07 DT Assy (PDP-427XD / 4270XD only)	The assembly must be replaced as a unit, and no part replacement is allowed.

7.3 BACKUP WHEN THE PANEL UNIT IS ADJUSTED

■ Outline

Adjustment data are stored in the EEPROM (IC3156/4K) on the DIGITAL Assy in the production process. Those adjustment data are also automatically stored in the EEPROM (for backup: IC3652) on the SENSOR Assy.
If the DIGITAL Assy is replaced, those adjustment data for backup can be copied from the EEPROM on the SENSOR Assy to a new DIGITAL Assy.

■ Backed up data

- Drive voltage adjustment value
- Hour-meter count
- Pulse-meter count
- Panel white balance adjustment value
- Serial No.
- Drive waveform adjustment value
- P-ON counter value
- PD/SD histories

■ How to copy backup data

1. When the DIGITAL Assy is replaced with one for service (usual service)

Adjustment data can be restored by copying the data backed up in the SENSOR Assy to the EEPROM on a new DIGITAL Assy.
The EEPROM on the new DIGITAL Assy has no adjustment data, and the EEPROM for backup in the SENSOR Assy has adjustment data. After replacing the DIGITAL Assy, enter PANEL FACT. mode, display the PANEL INFORMATION page, then check if "NO DATA!" is set for "DIG. EEP" and "ADJUSTED" is set for "BACKUP". Then, proceed in the following steps:

(1) Copying, using the Factory menu

① Plug in the AC cord, press the Power switch on the unit to set it to ON, then enter Standby mode.
② Turn on the power, using the remote control unit, then enter Panel Factory mode.
Copy the backup data, as shown in the figure below.

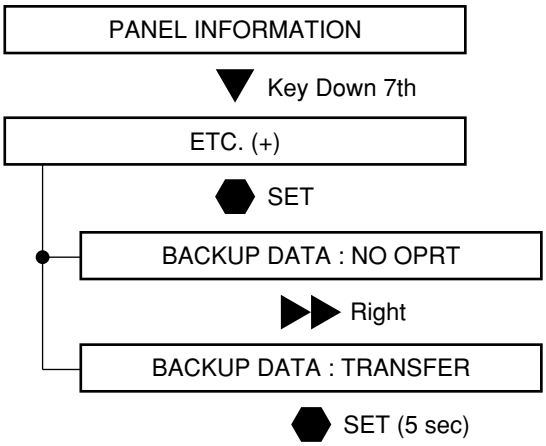

③ Turn the power off.

- After the DIGITAL Assy is replaced with one for service, be sure to check if "NO DATA!" is set for "DIG. EEP" on the PANEL INFORMATION page of the PANEL FACT. mode.
- If copying of the backup data fails in the above procedure, the red LED lights, and the blue LED flashes, as a warning that no backup data were copied.
- If both the DIGITAL and SENSOR Assys are to be replaced, first replace the SENSOR Assy, turn the unit on and back off again, then replace the DIGITAL Assy.

(2) Copying, using the RS-232C commands

① Switch the RS-232C/SR+ setting to RS-232C so that RS-232C commands can be received.
② Turn on the unit, using the remote control unit or by issuing the PON command. Then issue the FAY command.
③ Issue the BCP command to transfer the data stored in the EEPROM for backup.
④ Turn the power off.

2. When a secondhand DIGITAL Assy that had been mounted in another product is to be reused

As adjustment data for another product are already stored in the secondhand DIGITAL Assy, first delete those data then copy the backup data stored in the EEPROM on the SENSOR Assy.

(1) Copying, using the Factory menu

① Plug in the AC cord, press the Power switch on the unit to set it to ON, then enter Standby mode.
② Turn on the power, using the remote control unit, then enter Panel Factory mode.
Copy the backup data, as shown in the figure below.

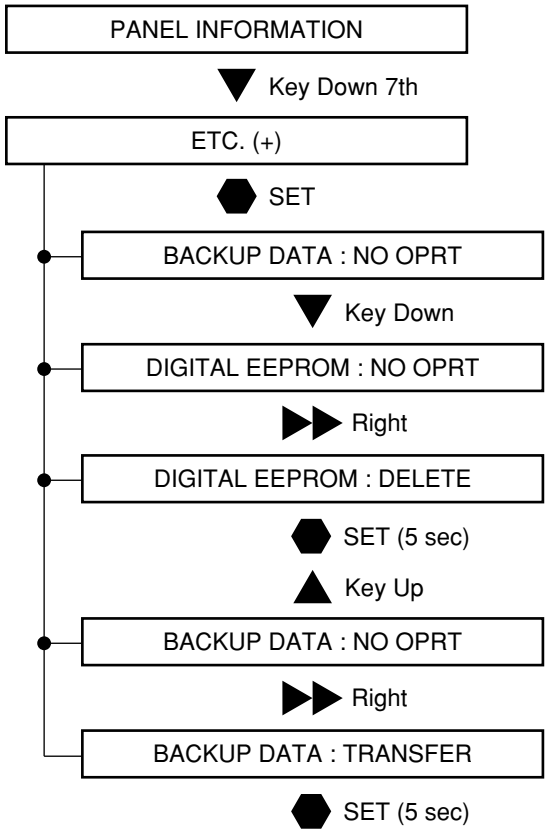

③ Turn the power off.

Note:
If the secondhand DIGITAL Assy is mounted in the product then the unit is turned on then back off again, the data in the EEPROM on the DIGITAL Assy are copied over the EEPROM in the SENSOR Assy. Thus the backup data can never be restored. During the first power-on after the DIGITAL Assy is replaced, be sure to enter Factory mode to copy the backup data. Or, before removing the secondhand DIGITAL Assy from the original product, delete the adjustment data on it, using the Factory mode (DIGITAL EEPROM: DELETE), mount it to the product to be repaired, then copy the data from the backup EEPROM.

(2) Copying, using the RS-232C commands

① Switch the RS-232C/SR+ setting to RS-232C so that RS-232C commands can be received.
② Turn on the unit, using the remote control unit or by issuing the PON command. Then issue the FAY command.
③ Issue the UAJ command to delete data stored in the EEPROM on the DIGITAL Assy.
④ Issue the BCP command to transfer the data stored in the EEPROM for backup.
⑤ Turn the power off.

3. In a case where normal backup data are not stored in the backup EEPROM because the EEPROM on the DIGITAL Assy is defective, etc., and where manually adjusted values are to be applied to the product

Note: In this section, it is assumed that settings for various items have been completed, using Factory menu or RS-232C commands.

(1) Method using the Factory menu

① Set various setting/adjustment values.
② Proceed in the following steps.

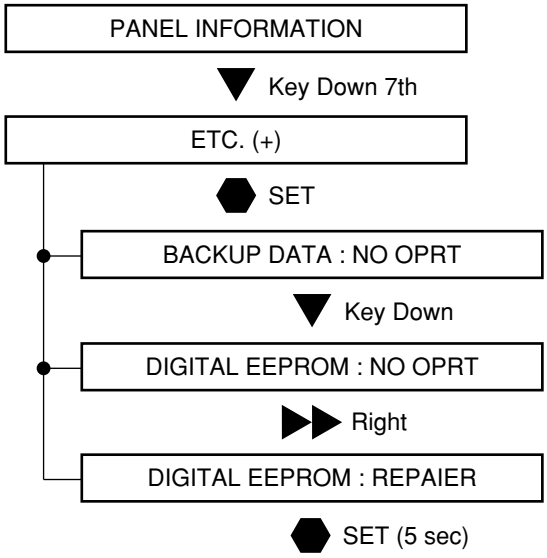

③ Turn the power off.

Note:
When a DIGITAL Assy with an EEPROM in which adjustment data are stored is mounted, this step is not required after manual adjustment. ("DIGITAL EEPROM: REPAIR" is not indicated.)

(2) Method using the RS-232C commands

Issue the FAJ command.

7.4 HOW TO CLEAR HISTORY DATA

■ Clearance of various logs after the Assys are replaced

Besides adjustment data, data on accumulated power-on time and logs on defective parts of the product are backed up. Some of those data must be cleared after the Assys are replaced for service.

(1) Clearance of logs, using the RS-232C commands

Item	Content	When the Panel is replaced	When the POWER SUPPLY Unit is replaced	When the Other parts is replaced	RS-232C Commands
Hour-meter	Accumulated power-on time	Must be cleared	No need to be cleared	No need to be cleared	CHM
Pulse-meter	Accumulated number of pulses emitted	Must be cleared (mandatory)	No need to be cleared	No need to be cleared	CPM
Shutdown history	Cause of an SD and hour-meter count	Must be cleared	No need to be cleared	No need to be cleared	CSD
Power-down history	Cause of an PD and hour-meter count	Must be cleared	No need to be cleared	No need to be cleared	CPD
Power-on counter	Relay-on count	No need to be cleared	Must be cleared (mandatory)	No need to be cleared	CPC
MAX TEMP	Historical max. temperature	Must be cleared	Must be cleared	Must be cleared	CMT

Notes:
- As the pulse-meter count is used for each correction function, it must be cleared when an Assy relevant to correction functions is replaced.
- When clearing logs, using the RS-232C commands, first enter Factory mode (by issuing FAY or PFY), then issue the corresponding command.

(2) Clearance of logs, using the Factory menu

① Plug in the AC cord, press the Power switch on the unit to set it to ON, then enter Standby mode.
② Turn on the power, using the remote control unit, then enter Panel Factory mode.
Delete various logs, as shown in the figure below.

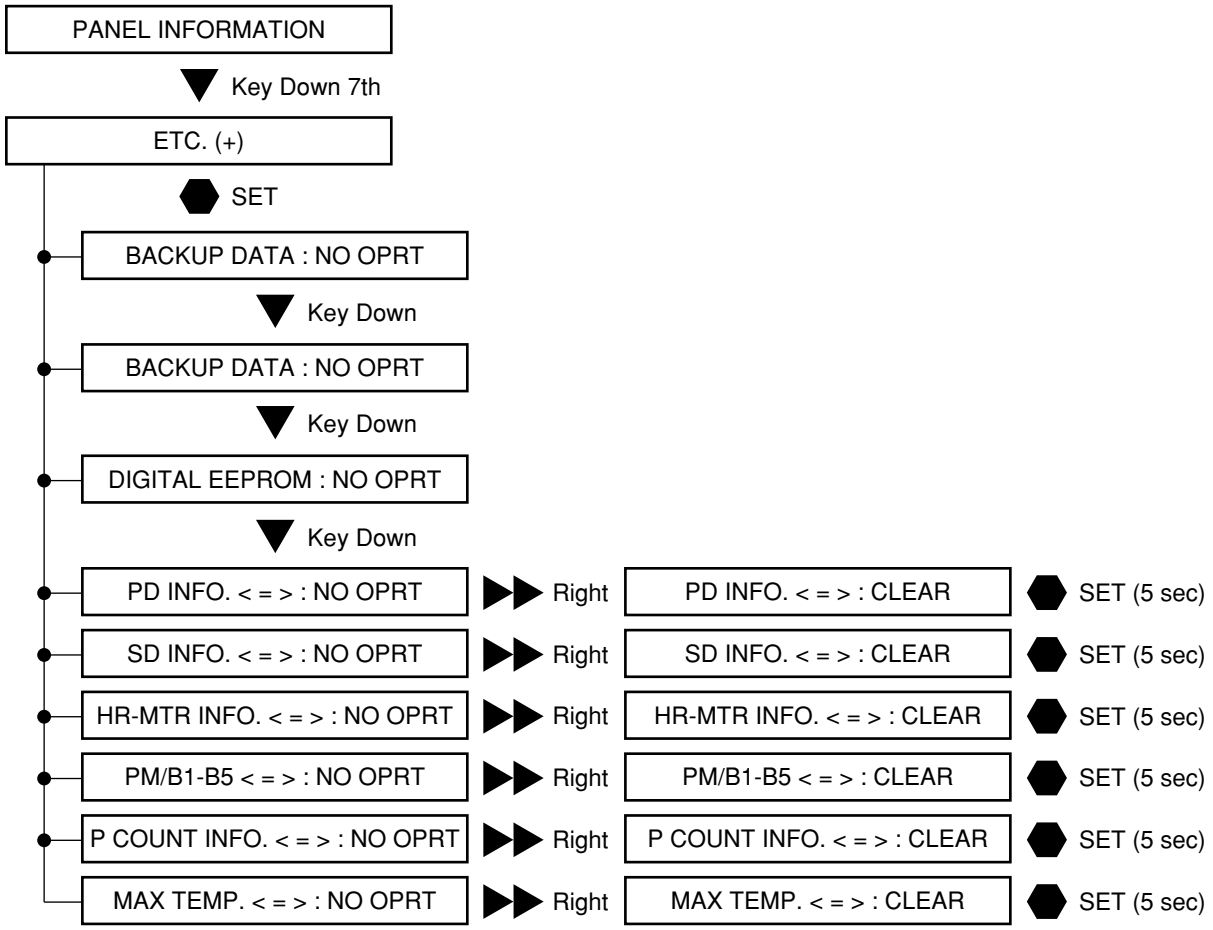

③ Turn the power off.

7.5 ADJUSTMENT WHEN THE SERVICE PANEL ASSY IS REPLACED

When the Panel Assy is replaced with one for service, the following adjustments are required:

■ Adjustments of Vofs voltage and Vyprst voltage

Enter the reference adjustment values for the Vofs voltage and Vyprst voltage that are written on the label attached to the panel for service.
Note: Enter the values, using an RS-232C command or the Factory Menu.

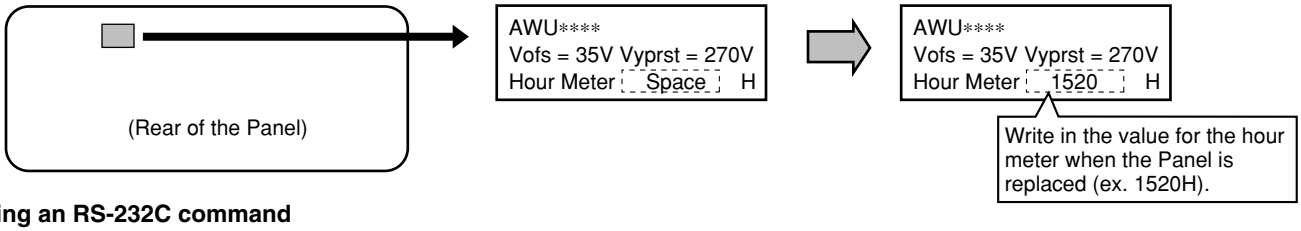

Using an RS-232C command

Enter a "PFY" command with Factory mode ON.
Convert the adjustment voltage values written on the label attached at the rear of the Panel to an input command, referring to the conversion chart. (See the next page.)
• Reference adjustment of the Vofs voltage: Ex. "Vofs = 35" → (Check the conversion chart.) Enter "VOF112."
• Reference adjustment of the Vyprst voltage: Ex. "Vyprst = 270 V" → (Check the conversion chart.) Enter "VRP078."

Using the Factory Menu

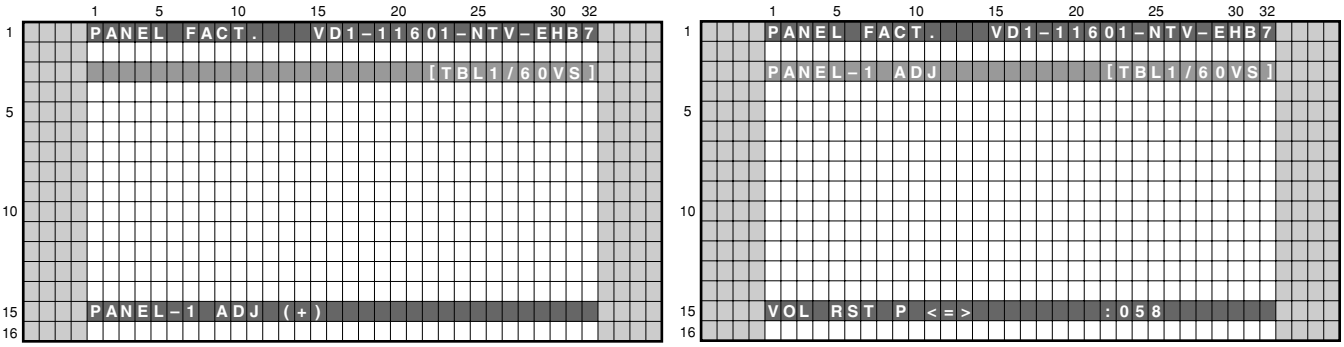

Select the main item "PANEL FACT." by pressing the MUTE key then enter Panel Factory mode by pressing the SET key.
Using the ▲/▼ keys, select "PANEL-1 ADJ" then press the SET key to enter the next lower nested layer.
Select "VOL-OFFSET" or "VOL RST P" then enter a command value converted from the voltage value, using the ◄/► keys.

■ Clearing data on various histories of the Panel, such as those on the hour meter

- It is necessary to clear the data on the hour meter, etc. to match them to the actual driving hours of the Panel.
- It is also necessary to clear the data on SD and PD, because the accumulated power-on time when a shutdown or power-down occurred is recorded.

Note: Clear the values, using an RS-232C command or the Factory Menu.
There are two types of hour meters. Do not take the MTB hour meter for the hour meter.

Using an RS-232C command

To acquire the accumulated power-on time of the product itself, use the "QS2" of RS-232C command.
1. To clear the data on the hour meter (for the Panel) : CHM
2. To clear the data on the pulse meter : CPM
3. To clear the data on the SD history : CSD
4. To clear the data on the PD history : CPD

Using the Factory Menu

See "7.4 HOW TO CLEAR HISTORY DATA."

■ Conversion charts for electronic VRs (Vprst/Vofs)

Vprst [V]	Setting value [STEP]
236	000
237	002
238	004
239	006
240	009
241	011
242	013
243	016
244	018
245	020
246	022
247	025
248	027
249	029
250	032
251	034
252	036
253	039
254	041
255	043
256	045
257	048
258	050
259	052
260	055
261	057
262	059
263	062
264	064
265	066
266	069
267	071
268	073
269	075
270	078
271	080
272	082
273	085
274	087
275	089
276	092
277	094
278	096
279	098

Vprst [V]	Setting value [STEP]
280	101
281	103
282	105
283	108
284	110
285	112
286	115
287	117
288	119
289	121
290	124
291	126
292	128
293	131
294	133
295	135
296	138
297	140
298	142
299	144
300	147
301	149
302	151
303	154
304	156
305	158
306	161
307	163
308	165
309	168
310	170
311	172
312	174
313	177
314	179
315	181
316	184
317	186
318	188
319	191
320	193
321	195
322	197
323	200

Vprst [V]	Setting value [STEP]
324	202
325	204
326	207
327	209
328	211
329	214
330	216
331	218
332	220
333	223
334	225
335	227
336	230
337	232
338	234
339	237
340	239
341	241
342	243
343	246
344	248
345	250
346	253
347	255

Vofs [V]	Setting value [STEP]
14	000
15	005
16	010
17	015
18	021
19	027
20	032
21	037
22	043
23	048
24	053
25	059
26	064
27	069
28	075
29	080
30	085
31	091
32	096
33	101
34	107
35	112
36	118
37	123
38	128
39	134
40	139
41	144
42	150
43	155
44	160
45	166
46	171
47	176
48	182
49	187
50	192
51	198
52	203
53	209
54	214
55	219
56	225
57	230

Vofs [V]	Setting value [STEP]
58	235
59	241
60	246
61	251
62	255

8. SERVICE FACTORY MODE

8.1 OUTLINE OF THE SERVICE FACTORY

8.1.1 SERVICE FACTORY MODE TRANSITION CHART

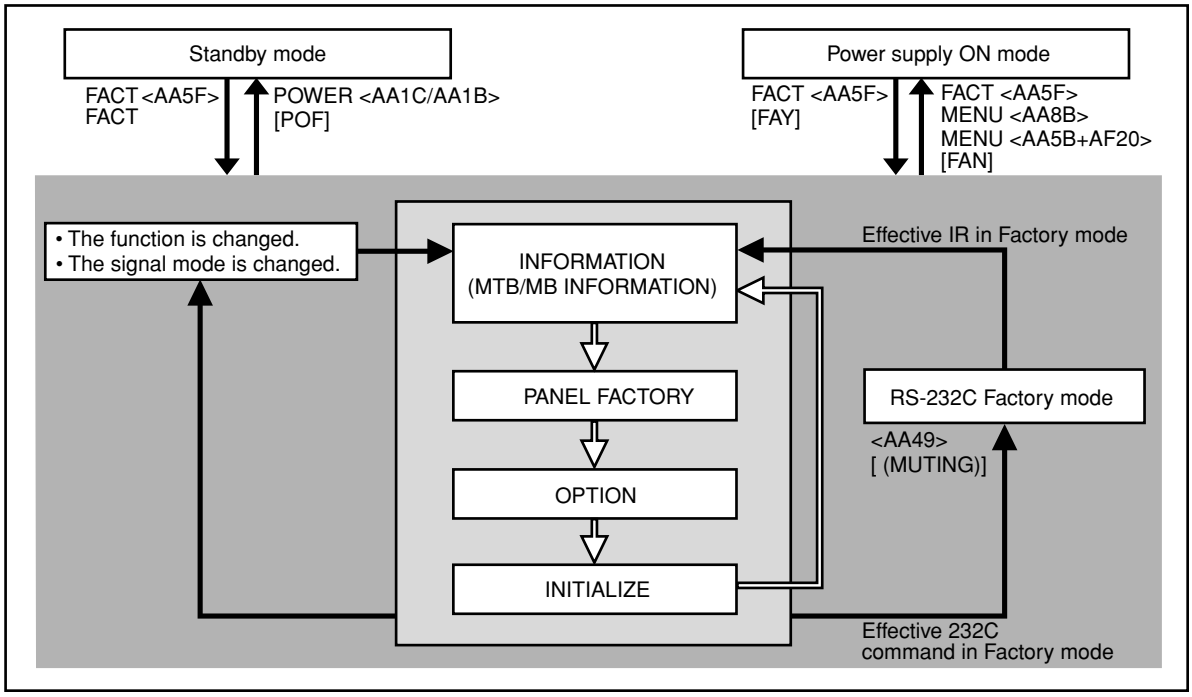

8.1.2 HOW TO ENTER/EXIT SERVICE FACTORY MODE

■ How to enter Service Factory Mode

By using a remote control unit for servicing)
- Remote control unit for servicing : Press [FACTORY1] key.

By issuing RS-232C commands)
- During normal Standby mode : Issue [PON] then [FAY].
- During normal operation mode : Issue [FAY].

■ How to exit Service Factory Mode

By using a remote control unit for servicing)
- Remote control unit for servicing : press [FACTORY1] key.
- Remote control unit supplied : press [HOME MENU] key.

By issuing RS-232C commands)
- Issue [FAN].

8.1.3 OPERATION OF SERVICE FACTORY MODE

■ Fuctions whose setting are set to OFF

No.	Function	Remarks
1	2-Screen Operation	Input function set on the main side is selected
2	FREEZE	
3	Mask Control	MTB/MB is none. It becomes processing on the PANEL side.
4	ORBITER	Central value operation

■ User data

User data will be treated as follows :

- User data on picture-quality and audio-quality adjustments are not reflected, and factory-preset data are output (user data will be retained in memory). When the unit enters Service Factory mode, the current audio-quality adjustment data will be still be retained in memory.
- As to data on various settings, user data will be applied to the items that are associated with signal format change (screenize switching, etc).
- Data on screen (i.e., screen position; meaning clock dividers, and not including data on screen size). Are reset to the default values (data stored in memory will be retained). Screen size will be retained.

8.1.4 REMOTE COTROL CODE

SR/R Keys	Basic Functions	Remarks
MUTING	Switching the main items.	Shifting to the next main item (top).
⬇ (DOWN) (Note1)	Switching the subtitled items.	Shifting downward to the next subtitiled item.
⬆ (UP) (Note1)	Switching the subtitled items.	Shifting upward to the next upper layer.
⬅ (LEFT) (Note1)	Decreasing the adjustment value.	Decreasing the adjustment value.
➡ (RIGHT) (Note1)	Increasing the adjustment value.	Increasing the adjustment value.
ENTER/SET (Note1)	Switching the layers.	Shifting downward or upward to the next lower or upper layer.
INPUT	Selecting INPUT.	Shifting the INPUT to the next function.
INPUTxx (Note1)	Selecting INPUT.	Switching the INPUT to xx. (xx=1 to 6 etc)
CH+/P+	Increasing the channel number.	Advanving
CH-/P-	Decreasing the channel number.	
Numeric Keys	Function: TV	Function: TV (previously selected channel number is selected)
POWER	Power OFF.	Turning the power off.
FACTORY	Factory OFF (Factory mode)	In Factory mode, turning Factory mode off.
	Factory ON (Non-Factory mode).	In Non-Factory mode, turn Fuctory mode on.
HOME MENU (Note1)	Menu ON.	In Factory mode, turn Factory mode off.
VOLUME+	Volume UP.	Increasing 10 the adjustment value. (PANEL FACTORY)
VOLUME-	Volume DOWN.	Decreasing 10 the adjustment value. (PANEL FACTORY)
DRIVE ON/OFF (Note2)	Drive Mode OFF.	Turning Drive mode off.
INTEGRATOR (Note1)	INTEGRATOR MENU ON.	Enter INTEGRATOR MODE.

(Note 1) A pertinent key that exists in the service remote control becomes effective only in the factory mode and the integrator mode. Please use the remote control of the attachment when you normally operate it in the mode (home menu operation etc.).

(Note 2) When ten seconds have passed since the [DRIVE ON/OFF] key was pressed at the standby, it becomes invalid. Please press [POWER] key from the [DRIVE ON/OFF] key pressing within ten seconds when you do power supply ON while driven OFF.

Remote control unit for Servicing | PDP-427XD | PDP-427XA | PDP-4270XD | PDP-4270XA

8.1.5 FACTORY HIERARCHICAL TABLE

Large Item	Middle Item	Small Item	Variable / Adjustment Range	Remarks
8.2.1 INFORMATION				
	8.2.1.1 VERSION (1)			
	8.2.1.2 VERSION (2)			
	8.2.1.3 MAIN NG	CLEAR <=>	OFF <=> ON	
	8.2.1.4 TEMPERATURE			
	8.2.1.5 HOUR METER			
	8.2.1.6 HDMI SIGNAL INFO 1			
	8.2.1.7 HDMI SIGNAL INFO 2			
	8.2.1.8 VDEC SIGNAL INFO			
8.2.2 PANEL FACTORY (+)				
	8.2.2.1 PANEL INFORMATION			
	8.2.2.2 PANEL WORKS			
	8.2.2.3 POWER DOWN			
	8.2.2.4 SHUT DOWN			
	8.2.2.5 PANEL-1 ADJ (+)	X-SUS B <=>	120 to 136	Equivalent to XSB
		Y-SUS B <=>	120 to 136	Equivalent to YSB
		Y-SUSTAIL T1 <=>	120 to 136	Equivalent to YTG
		Y-SUSTAIL T2 <=>	120 to 136	Equivalent to YTB
		Y-SUSTAIL W <=>	120 to 136	Equivalent to YTW
		XY-RST W1 <=>	120 to 136	Equivalent to RSW
		XY-RST W2 <=>	120 to 136	Equivalent to RYW
		VOL SUS <=>	000 to 255	Equivalent to VSU
		VOL OFFSET <=>	000 to 255	Equivalent to VOF
		VOL RST P <=>	000 to 255	Equivalent to VRP
		SUS FREQ. <=>	MODE 1 to MODE 8	Equivalent to SFR
	8.2.2.6 PANEL-2 ADJ (+)	R-HIGH <=>	000 to 511	Equivalent to PRH
		G-HIGH <=>	000 to 511	Equivalent to PGH
		B-HIGH <=>	000 to 511	Equivalent to PBH
		R-LOW <=>	000 to 999	Equivalent to PRL
		G-LOW <=>	000 to 999	Equivalent to PGL
		B-LOW <=>	000 to 999	Equivalent to PBL
		ABL <=>	000 to 255	Equivalent to ABL
	8.2.2.7 PANEL REVISE (+)	R-LEVEL <=>	LV-0 to LV-7	Equivalent to RRL
		G-LEVEL <=>	LV-0 to LV-7	Equivalent to RGL
		B-LEVEL <=>	LV-0 to LV-7	Equivalent to RBL
	8.2.2.8 ETC. (+)	BACKUP DATA <=>	NO OPRT <=> TRANSFER or ERR	Equivalent to BCP
		DIGITAL EEPROM <=>	NO OPRT <=> DELETE/REPAIR	Equivalent to FAJ/UAJ
		PD INFO. <=>	NO OPRT <=> CLEAR	Equivalent to CPD
		SD INFO. <=>	NO OPRT <=> CLEAR	Equivalent to CSD
		HR-MTR INFO. <=>	NO OPRT <=> CLEAR	Equivalent to CHM
		PM/B1-B5 <=>	NO OPRT <=> CLEAR	Equivalent to CPM
		P COUNT INFO. <=>	NO OPRT <=> CLEAR	Equivalent to CPC
		MAX TEMP. <=>	NO OPRT <=> CLEAR	Equivalent to CMT
	8.2.2.9 RASTER MASK SETUP (+)	MASK OFF	<=> 48V <=> 50V <=> 60V <=> 60P <=> 70P <=> 72V <=> 75V <=>	Equivalent to MKS+S00
		RST MASK 01 <=>		Equivalent to MKS+S51
		• • •		• • •
		RST MASK 24 <=>		Equivalent to MKS+S74
	8.2.2.10 PATTEN MASK SETUP (+)	MASK OFF	<=> 48V <=> 50V <=> 60V <=> 60P <=> 70P <=> 72V <=> 75V <=>	Equivalent to MKS+S00
		PTN MASK 01 <=>		Equivalent to MKS+S01
		• • •		• • •
		PTN MASK 39 <=>		Equivalent to MKS+S39
	8.2.2.11 COMBI MASK SETUP (+)	MASK OFF	<=> 48V <=> 50V <=> 60V <=> 60P <=> 70P <=> 72V <=> 75V <=>	Equivalent to MKC+S00
		CMB MASK 01 <=>		Equivalent to MKC+S01
		• • •		• • •
		CMB MASK 10 <=>		Equivalent to MKC+S10
8.2.3 OPTION				
	8.2.3.1 EDID WRITE MODE <=>			Exclusively used for production line
	8.2.3.2 CH PRESET <=>			
8.2.4 INITIALIZE				
	8.2.4.1 SYNC DET (+)			for the technical analysis
	8.2.4.2 SG MODE <=>		SG OFF <=> • • •	
	8.2.4.3 SG PATTERN <=>		SG PATTERN <=> COLOR BAR 1 • • •	
	8.2.4.4 SIDE MASK LEVEL (+)	R MASK LEVEL <=>	000 to 255	
		G MASK LEVEL <=>	000 to 255	
		B MASK LEVEL <=>	000 to 255	
	8.2.4.5 FINAL SETUP (+)	DATA RESET <=>	OFF <=> ON	
	8.2.4.6 CVT AUTO <=>			Exclusively used for technical analysis (details omitted)
	8.2.4.7 HDMI INTR POSITION (+)	INTR-POS1 (0x75) <=>	000 to 255	
		INTR-POS2 (0x76) <=>	000 to 255	
		INTR-POS3 (0x77) <=>	000 to 255	
		INTR-POS4 (0x78) <=>	000 to 255	

8.1.6 INDICATIONS IN SERVICE FACTORY MODE

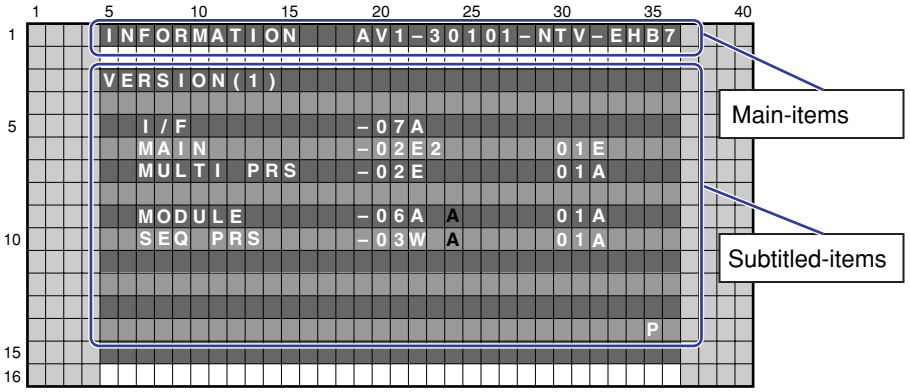

■ Main-item indications

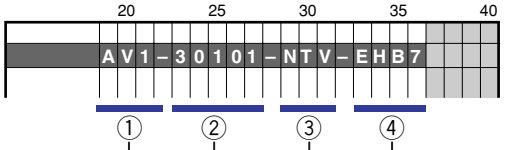

① Input function

Input Functions	OSD
AV 1 to 4	AV 1 to 4
AV 5 (Step-up model only)	AV5
Terrestrial Analog Wave	AIR
Terrestrial Digital Wave	ARD
Cable	CBL
PC (Step-up model only)	PC

② SIG mode and Screen size

Note: See SIG-Mode Tables. (See next page.)

③ Color system and Signal type

Color System and Signal Type	OSD1	OSD2
NTSC	NTV	NTS
PAL	PLV	PLS
PAL M	PMV	PMS
PAL N	PNV	PNS
SECAM	SCV	SCS
4.43 NTSC	4NV	4NS
BLACK/WHITE	BWV	BWS
Y/CB/CR	CBR	
Y/PB/PR	PBR	
RGB	RGB	
Digital Video signal	DIG	

Note: OSD1 (Composite input), OSD2 (S-Connector input)

④ Option (Destination, Panel Generation, etc.)

Options	OSD
Step-up D system	EHB7
Step-up A system	ESB7
Regular D system	ETB7
Regular A system	ERB7

② SIG Mode and Screen size (by User is displayed)

1st and 2nd characters : Resolutin of the input signal
3rd and 4th characters : Refresh rate of the input signal
5th character : Selection of the screen size

■ Input signal mode table for video signals (resolutions and V frequencies)

1st to 4th Character		Signal Type	Fv (Hz)	Fh (kHz)
10	50	SDTV*525i	60.000	15.750
	60	SDTV*525i	60.000	15.750
20	50	SDTV*625p	60.000	31.500
	60	SDTV*525p	60.000	31.500
30	50	HDTV*1125i	60.000	33.750
	60	HDTV*1125i	60.000	33.750
40	50	HDTV*750p	60.000	45.000
	60	HDTV*750p	60.000	45.000
50	24	HDTV*1125p	24.000	27.000

Fv: Vertical Frequency, Fh: Horizontal Frequency

■ Input signal mode table for PC signals (resolutions and V frequencies)

1st to 4th Character		Signal Type	Fv (Hz)	Fh (kHz)
C1	70	720 x 400	70.087	31.469
C2	60	640 x 480	59.940	31.469
	72		72.809	37.861
	75		75.000	37.500
C4	56	800 x 600	56.250	35.1556
	60		60.317	37.879
	72		72.188	48.077
	75		75.000	46.875
C7	60	1024 x 768	60.004	48.363
	70		70.069	56.476
	75		75.029	60.023
C9	60	1360 x 768	60.015	47.712

Fv: Vertical Frequency, Fh: Horizontal Frequency

■ Current selection of the screen size

5th Character	GUI Notation	VIDEO	PC	Remarks
0	DOT BY DOT	–	●	
1	4:3	●	●	
2	FULL (FULL1)	●	●	
3	ZOOM	●	–	
4	CINEMA	●	–	
5	WIDE	●	–	
6	FULL 14:9	●	–	
7	CINEMA 14:9	●	–	
8	FULL2	–	●	

●: supported, –: unsupported

8.2 FACTORY MENU
8.2.1 INFORMATION

● **Operation items**

No.	Function/Display	Context	RS-232C Command
1	VERSION (1)	The software versions for each microcomputer are displayed. (Common part)	QS1
2	VERSION (2)	The Flash memory versions for each device are displayed. (Individual part)	QS6
3	MAIN NG	The Shutdown Message ID/Event Times in Main Microcomputer are displayed.	QNG
4	TEMPERATURE	The Temperature/FAN rotating status in Main Microcomputer are displayed.	QMT
5	HOUR METER	The HOUR METER/P-COUNT information are displayed.	QIP
6	HDMI SIGNAL INFO 1	The Information of HDMI information files are displayed.	–
7	HDMI SIGNAL INFO 2		
8	VDEC SIGNAL INFO	Display the Signal Information on VDEC.	–

8.2.1.1 VERSION (1)

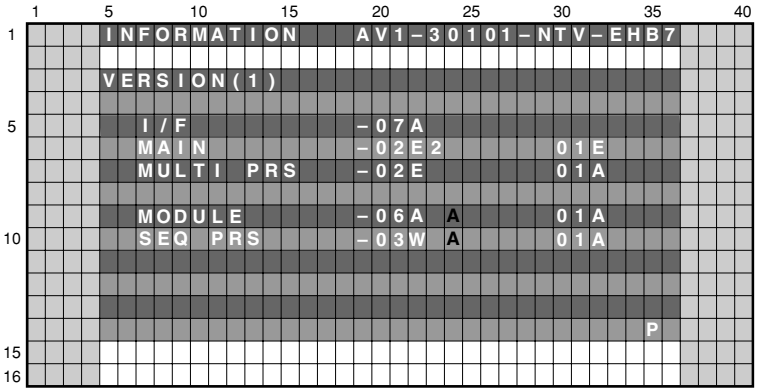

Microcomputer	Item Name	Display Example (Execution program block)	Display Example (Boot block)
I/F microcomputer	I/F	-07A	–
Main microcomputer	MAIN	-02E2	01E
Multi processor	MULTI PRG	-02E2	01A
Module microcomputer	MODULE	-06A_A	01A
Sequence processor	SEQ PRS	-03W_A	01A

Note: In the 29-32 rows, the Boot version information on each device is displayed.
In the 19-24 rows, the version of the execution program is displayed.
At the position "14x35", The Past/Highly effective panel distinction information is displayed.

8.2.1.2 VERSION (2)

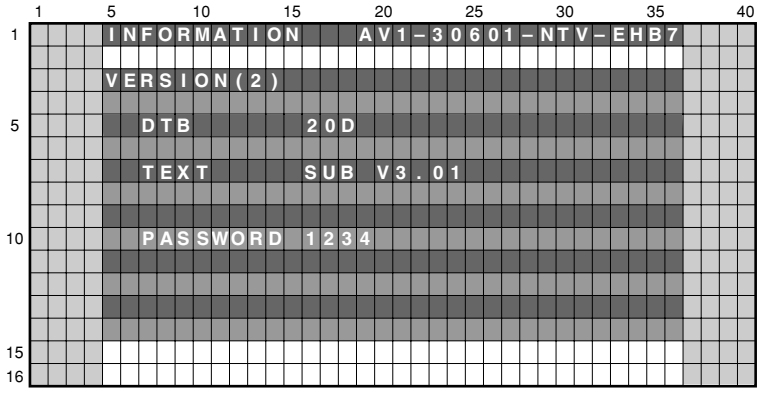

Step-up D / Regular D

Flash Device	Item Name	Display Example
Digital Tuner	DTB	20D
TeleTEXT	TEXT	SUB V3.01
User Password	PASSWORD	1234

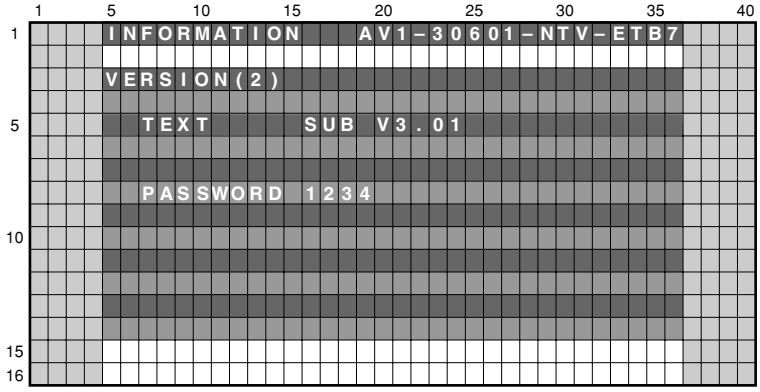

Step-up A / Regular A

Flash Device	Item Name	Display Example
TeleTEXT	TEXT	SUB V3.01
User Password	PASSWORD	1234

8.2.1.3 MAIN NG

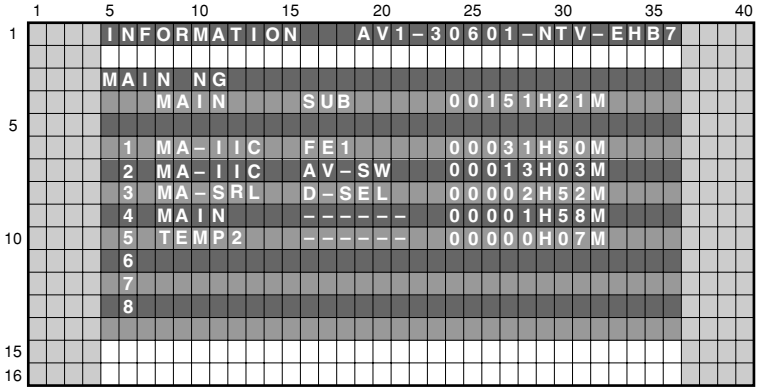

MTB side's Shutdown NG information

OSD: MAIN	OSD: SUB	Cause of Shutdown
AUDIO	----	
MODULE	----	Failure of communication to Module microcomputer.
MA-SRL		3-wire Serial Communication of Main microcomputer.
	IF	Communication failure of IF microcomputer
	MULTI1	Multi Processor communication failure (MULIT1)
	I/P	Multi Processor communication failure (I/P)
	D-SEL	Multi Processor communication failure (D-SEL)
MA-IIC		IIC Communication failure of Main microcomputer
	FE1	Analog Tuner 1 (Front End 1)
	MPX	MPX
	AUDIO	
	AV-SW	AV Switch
	RGB-SW	RGB Switch
	M-VDEC	Main VDEC
	S-VDEC	Sub VDEC
	ADC	AD/PLL
	HDMI	HDMI
	TX-COM	TX communication failure
	TX-BSY	TX Busy
	MA-EEP	64k EEPROM
MAIN		Communication failure of Main microcomputer &Unknown Error
FAN		Fan stopped
TEMP2		Abnormally high temperature at MTB.
DTUNER		Failure of Digital Tuner
	PS/RST	Failure to DTB Starting
	RETRY	DTB communication failure.
MA-PWR	M-DCDC	Abnormally in RST2 of MTB. (power decrease of DC-DC converter)
	RELAY	Relay Power Supply

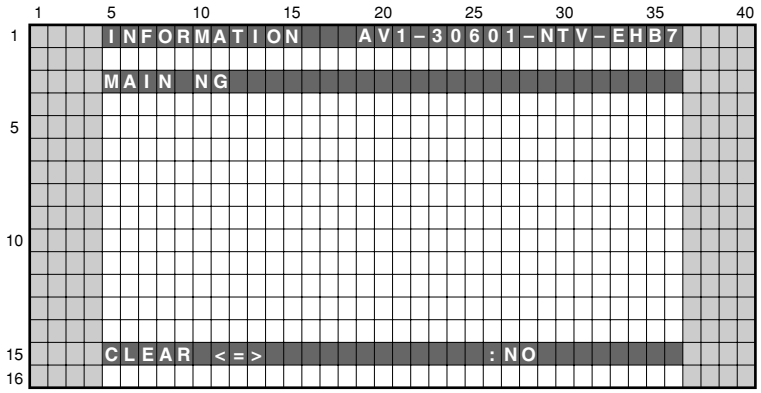

Operation:

Even if [⬅] key or [➡] key is pressed, "CLEAR ⇔ YES" ⇔ "CLEAR ⇔ NO" is repeated.
If the [ENTER] key is kept on pressing for 5 second when the status of this menu is <YES>, clear process will begin.

8.2.1.4 TEMPERATURE

A present temperature and the FAN rotation are displayed.
If either [⬅] key or [➡] key is pressed, the display data is refreshed.

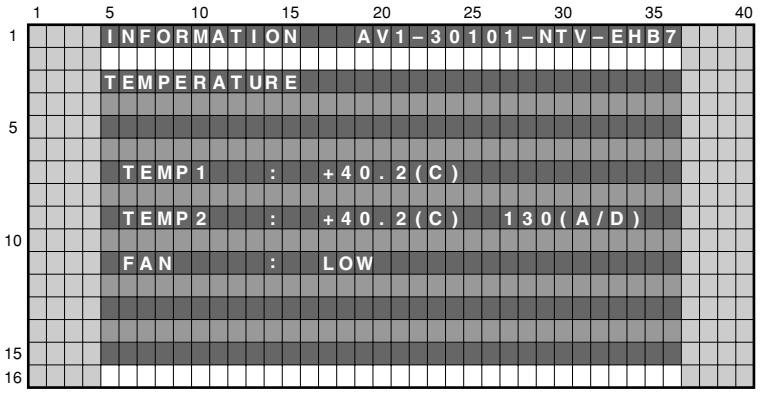

• Display/Meaning

TEMP1 : The temperature of the sensor on the panel side is displayed by the centigrade.
TEMP2 : The temperature conversion display is done with 10bit the A/D input value of Main uCON 76 pin (AN0). It is displayed by both the centigrade (C) and 8bit A/D value.
(Remark:When temperature (C) of the sensor becomes more than a specified temperature, the shutdown start of processing.)
FAN : The value of the Fan rotating state is displayed.
STOP : stopped, LOW: slow speed, HIGH: high speed.

8.2.1.5 HOUR METER

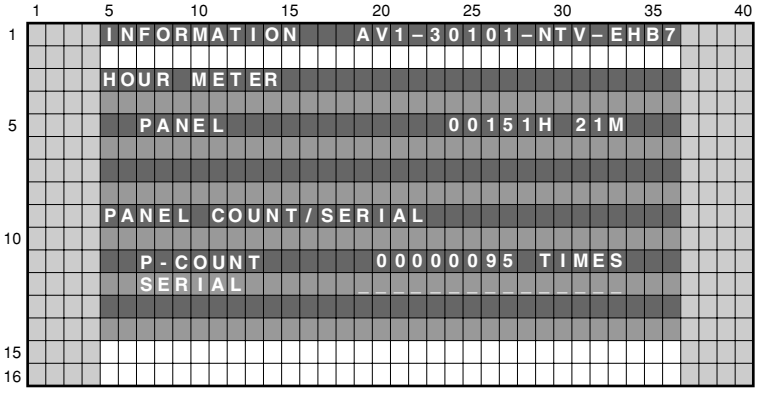

• Display/Meaning

Meaning	Item Name	Display Example	Corresponding RS-232C Command
HOUR METER (PANEL)	PANEL	00151H 21M	QIP
POWER ON COUNTER	P-COUNT	00000095 TIMES	QIP
SYSTEM SERIAL	SERIAL		QIP

Note 1: The SYSTEM SERIAL displays only FHD. It corresponds by sticking the seal in G7 model.
Note 2: The PANEL-side's HOUR METER/P-COUNT acquires information from the PANEL-side.

8.2.1.6 HDMI SIGNAL INFO (1)

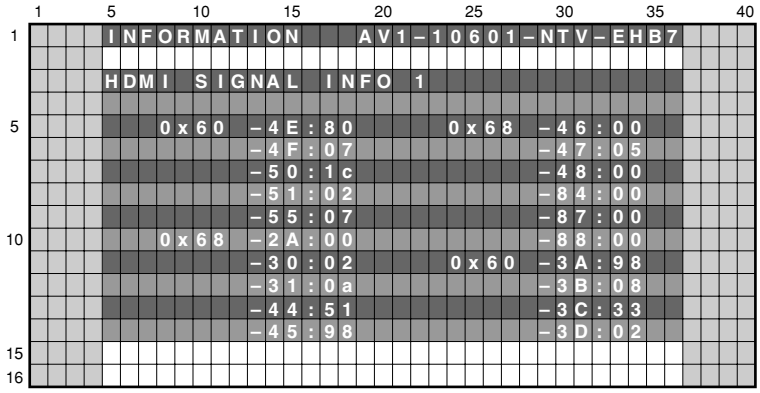

Displays the input signal information of HDMI terminal

Device	SA	Context
0×60	-4E:	Video information: valid horizontal pixel numbers (low order bit)
	-4F:	Video information: valid horizontal pixel numbers (high order bit)
	-50:	Video information: valid vertical line numbers (low order bit)
	-51:	Video information: valid vertical line numbers (high order bit)
	-55:	Video information: interlace/non-interlace, sink polarity
0×68	-2A:	Audio information: PCM/non PCM, copyright protected or not
	-30:	Audio information: sampling frequency
	-31:	Audio information: sampling bit rate
	-44:	Audio information: color space
	-45:	Video information: aspect ratio
	-46:	Video information: scaling
	-47:	Video information: video format
	-48:	Video information: pixel count
	-84:	Audio information: channel count
	-85:	Audio information: not used (zero at all times)
	-86:	Audio infromation: not used (zero at all times)
	-87:	Audio information: speaker allocation
	-88:	Audio information (down mix prohibit flag)
0×60	-3A:	Video information: valid horizontal pixel numbers (low order bit)
	-3B:	Video information: valid horizontal pixel numbers (high order bit)
	-3C:	Video information: valid vertical line numbers (low order bit)
	-3D:	Video information: valid vertical line numbers (high order bit)

8.2.1.7 HDMI SIGNAL INFO (2)

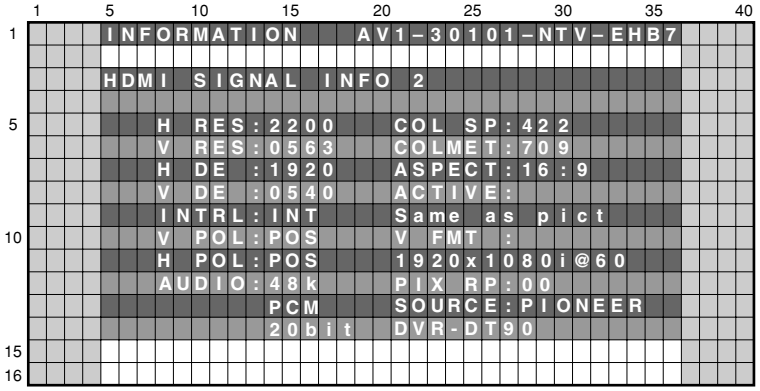

Displays input signal status of MVDEC terminal

Display Item	Meaning
H RES	Number of horizontal pixels (decimal)
V RES	Number of vertical lines (decimal)
H DE	Number of effectively horizontal pixels (decimal)
V DE	Number of effectively vertical lines (decimal)
INTRL	Intetlace (=INT) or progressive (=PRG)
V POL	VSYNC polarity
H POL	HSYNC polarity
AUDIO (first line)	Sampling frequency. (ex. DVD: 48kHz, CD: 44.1kHz) *1
AUDIO (second line)	PCM (PCM) or No PCM (=no PCM)
AUDIO (third line)	Quantization bit
COL SP	Color space (AVI Info) (422 or 444 or RGB) *2
COLMET	Colormetry (AVI Info) (SD: 601, HD:709) *2
ASPECT	Aspect (AVI Info)
ACTIVE	Video active format (AVI Info)
V FMT	Video identification code (AVI Info)
PIX RP	Pixel repeat value for 2880 dot
SOURCE (first line)	Vendor name of the emission device
SOURCE (second line)	Model name of the emission device

*1: Please confirm whether to be displayed here when the sound is not emitted.
*2: There is a possibility of not suitable for the state of the source equipment when the color is amusing.

Display of HDMI FACTORY and correspondence of resolution
Please confirm the following 5 items when the picture doesn't come out.

Input Signal	FACTORY Display				
	H RES	V RES	H DE	V DE	V FMT
480i (525i)	858	262 or 263	720	240	720x480i @ 60
480p (525p)	858	525	720	480	720x480p @60
1080i (1125i)	2200	562 or 563	1920	540	1920x1080i @ 60
720p (750p)	1650	750	1280	720	1280x720p @ 60

8.2.1.8 VDEC SIGNAL INFO

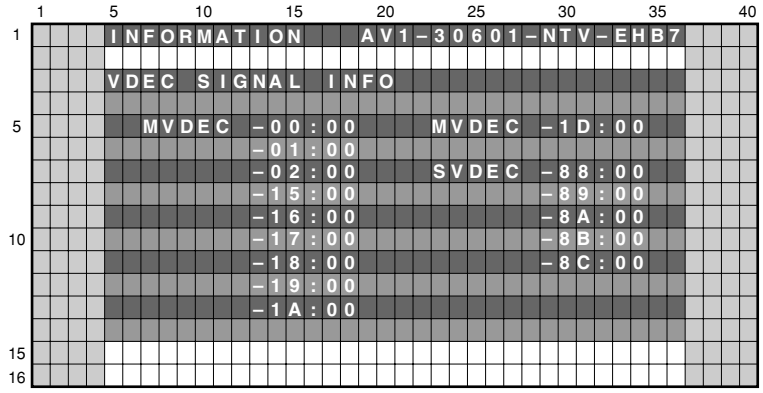

Step-up

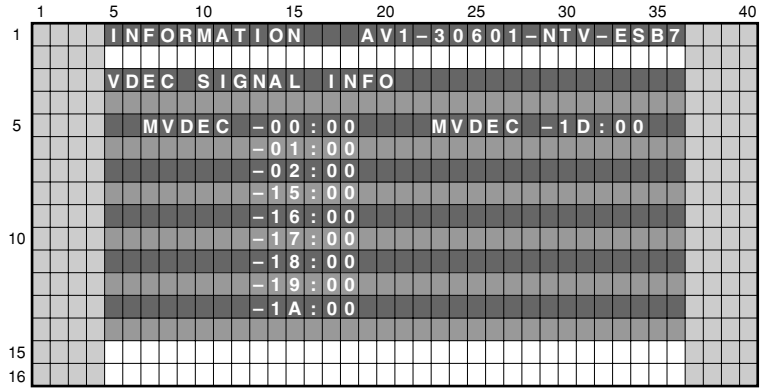

Regular

Displays input signal status of VDEC terminal.

Device	SA	Context
MVDEC	00h	Signal distinction result 1
	01h	Signal distinction result 2
	02h	Flag detection output
	15h	Noise level distinction 1
	16h	Noise level distinction 2
	17h	Non-standard signal detection
	18h	Subcarrier signal detection
	19h	ACC data output
	1Ah	ACC information output
	1Dh	Input signal mode
SVDEC	88h	Status register 1 (TV/VCR status)
	89h	Status register 2 (Macrovision detection, etc.)
	8Ah	Status register 3 (Front-end AGC gain value)
	8Bh	Status register 4 (Subcarrier to horizontal (SCH) phase)
	8Ch	Status register 5 (Signal distinction)

Displays digital broadcast signal information and status upon receiving digital signal.

8.2.2 PANEL FACTORY

■ Operation Items

This is the menu screen for the adjustment of the panel. Data acquisition and value adjustment can be performed for the following items:

No.	Indication	Description of functions
8.2.2.1	PANEL INFORMATION	Data, such as the version of the microcomputer of the panel, product serial number, and statuses of memories for adjustment values for the main unit and for backup, are displayed.
8.2.2.2	PANEL WORKS	Operation data, such as accumulated pulse-meter count, accumulated hour-meter count, accumulated power-on count, and the temperature detected by the sensor, are displayed.
8.2.2.3	POWER DOWN	The power-down history is displayed, with the hour-meter values that indicate the hour values when power-downs occurred.
8.2.2.4	SHUT DOWN	The shutdown history is displayed, with the hour-meter values that indicate the hour values when shutdowns occurred.
8.2.2.5	PANEL-1 ADJ (+)	Settings of the driving pulse timing and driving voltage can be performed.
8.2.2.6	PANEL-2 ADJ (+)	White balance and ABL (power consumption) for the panel can be set.
8.2.2.7	PANEL REVISE (+)	The level for correction of panel degradation can be set.
8.2.2.8	ETC. (+)	Copying of backup data and clearance of various data can be performed.
8.2.2.9	RASTER MASK SETUP (+)	The mask indication (RASTER) can be set and indicated.
8.2.2.10	PATTEN MASK SETUP (+)	The mask indication (PATTERN) can be set and indicated.
8.2.2.11	COMBI MASK SETUP (+)	The mask indication (COMBI) can be set and indicated.

■ Details of indications in each layer

• In the following examples, GUI images for a 50-inch model are indicated. Although the display areas for the menu for 42-inch and 50-inch models are different, the items to be displayed are the same.

8.2.2.1 PANEL INFORMATION

• Data, such as the version of the microcomputer of the panel, product serial number, and statuses of memories for adjustment values for the main unit and for backup, are displayed. No other layers are nested below this layer, and there are no adjustment items.

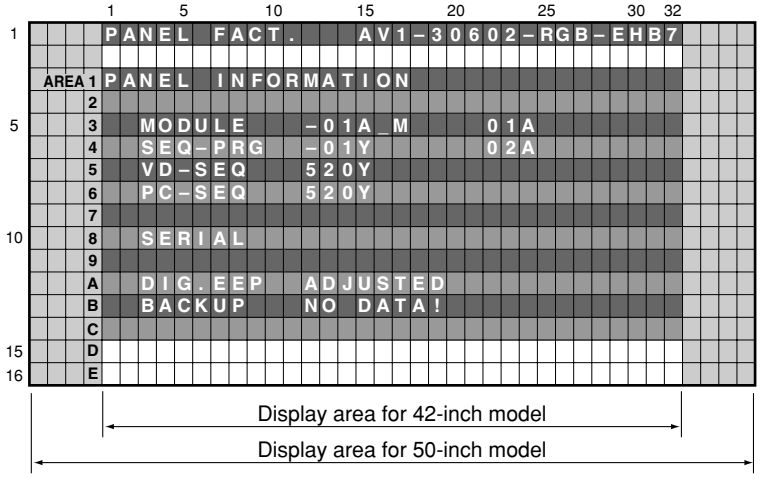

■ Key operation

<DOWN> : Shifting to PANEL WORKS
<UP> : Shifting to COMBI MASK SETUP (+)
<L/R> : Updating displayed information

■ Display items:

MODULE : The version of data written in the Module microcomputer (IC3151) is indicated.
SEQ-PRG : The version of data written in the Sequence Program Storage Memory (IC3301) is indicated.
VD-SEQ : The Drive Sequence version for Video mode is indicated.
PC-SEQ : The Drive Sequence version for PC mode is indicated.
SERIAL : The serial number of the module is indicated.
DIG.EEP : The adjusted status of the EEPROM that is mounted on the DIGITAL Assy is indicated.
BACKUP : The adjusted status of the EEPROM for backup that is mounted on the SENSOR Assy is indicated.

8.2.2.2 PANEL WORKS

• Data on operations, such as the accumulated pulse-meter counts, hour-meter count, power-on count, and temperature detected by the sensor, are sent back. No other layers are nested below this layer, and there are no adjustment items.

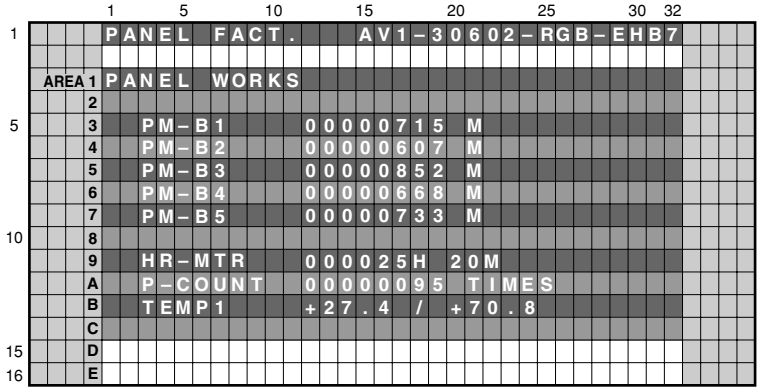

■ Key operation

<DOWN> : Shifting to POWER DOWN
<UP> : Shifting to PANEL INFORMATION
<L/R> : Updating displayed information

← Temperature unit is " °C (Centigrade) ".

■ Contents of the Display item

• PM-B1 to B5: The accumulated pulse-meter counts for the 5 blocks on the screen are indicated. (the lowest-order digit represents millions of pulses.)
• HR-MTR: The hour-meter value (accumulated power-on hours) is indicated.
• P-COUNT: The accumulated power-on count is indicated.
• TEMP1: The current panel temperature and the historical maximum temperature recorded in memory are indicated. The range of temperature indication is from -50.0 to +99.9. (The temperature unit is " °C (Centigrade) ".)

8.2.2.3 POWER DOWN

- The power-down history is displayed. The last most 8 power-down histories are displayed with the hour-meter values that indicate the hours when power-downs occurred. No other layers are nested below this layer, and there are no adjustment items.

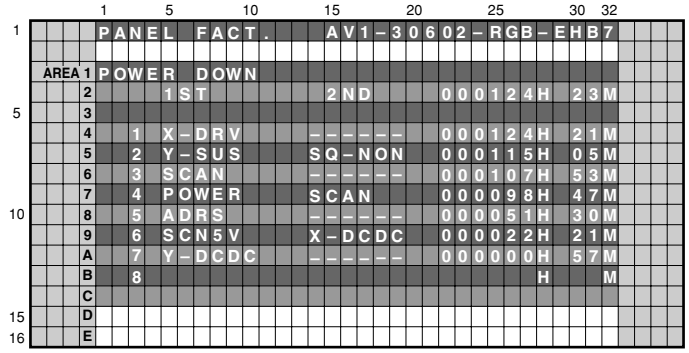

■ Key operation

<DOWN> : Shifting to SHUT DOWN
<UP> : Shifting to PANEL WORKS
<L/R> : Updating displayed information

<Causes of power-down and corresponding OSD indications>

Cause of power-down	OSD Indication	Cause of power-down	OSD Indication
POWER SUPPLY Unit	P-PWR	ADDRESS Assy	ADRS
SCAN Assy	SCAN	X DRIVE Assy	XDRV
5V power for SCAN Assy	SCAN5V	DC/DC converter for X drive	X-DCDC
Y DRIVE Assy	YDRV	X-drive SUS circuit	X-SUS
DC/DC converter for Y drive	Y-DCDC	Specification inability	UNKNOWN
Y-drive SUS circuit	Y-SUS		

* When power-down is confirmed, the factor is displayed as "1st", "2nd", according to the accuracy order.
* The power-down history is not recorded when the power-down occurred at the same place and same time.

8.2.2.4 SHUT DOWN

- The shutdown history is displayed. The last most 8 shutdown histories are displayed with the hour-meter values that indicate the hours when shutdowns occurred. No other layers are nested below this layer, and there are no adjustment items.

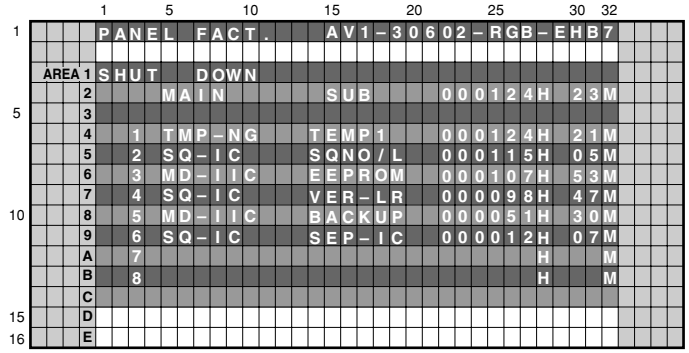

■ Key operation

<DOWN> : Shifting to PANEL-1 ADJ (+)
<UP> : Shifting to POWER DOWN
<L/R> : Updating displayed information

* When there is detail information when shutdown occurred, the possible defective part is displayed as Sub information.

<Cause of shut-down and corresponding OSD Indication >

Cause of shut-down (MAIN)		Cause of shut-down (SUB)	
Item	**OSD Indication**	**Item**	**OSD Indication**
Drive Processing IC	SQ-IC	Communication Error	RTRY
		Drive Stop	SQNO
		Communication Busy	BUSY
		Incoherent Version	VER-HS
MDU-IIC	MD-IIC	MAIN EEPROM Communication Error	EEPROM
		BACKUP EEPROM Communication Error	BACKUP
		DAC Communication Error	DAC
High temperature of the panel	TMP-NG	Temperature NG	TEMP

8.2.2.5 PANEL-1 ADJ (+)

- Timing and voltage for the driving pulse are set. At third line of the screen, the WB (White Balance) table and frequency table indicating operation status are displayed, and at fifteenth line of the screen, the item for the upper nested layer (PANEL-1 ADJ [+]) is displayed. Pressing the SET key shifts the screen to the next nested layer below for item selection.

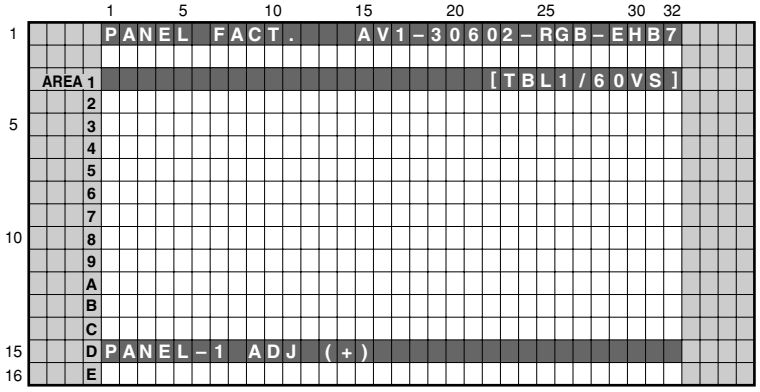

■ Key operation

<DOWN> : Shifting to PANEL-2 ADJ (+)
<UP> : Shifting to SHUT DOWN
<SET> : Shifting to the next nested layer

- When the screen is shifted to the next nested layer below, the item of the layer above is indicated at third line of the screen, and the item of the layer below is indicated at fifteenth line.
- The configuration of the menu screen is the same for any adjustment item that has lower layers.

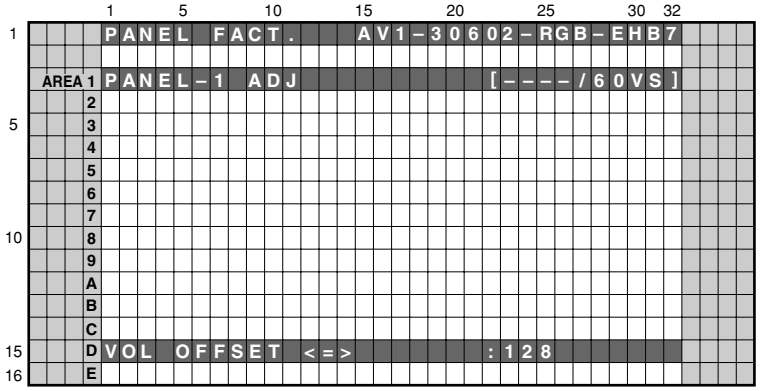

■ Key operation

<DOWN> : Shifting to the next item
<UP> : Shifting to the previous item
<RIGHT> : Adding by one to the adjustment/ setting value
<LEFT> : Subtracting by one from the adjustment/setting value
<VOL+> : Adding by 10 to the adjustment/ setting value
<VOL-> : Subtracting by 10 from the adjustment/setting value
<SET> : Determining the adjustment/setting value and shifting to the upper layer

8.2.2.6 PANEL-2 ADJ (+)

- White balance can be adjusted by adjusting R, G, and B gain. Pressing the SET key shifts the screen to the next nested layer below for item selection.

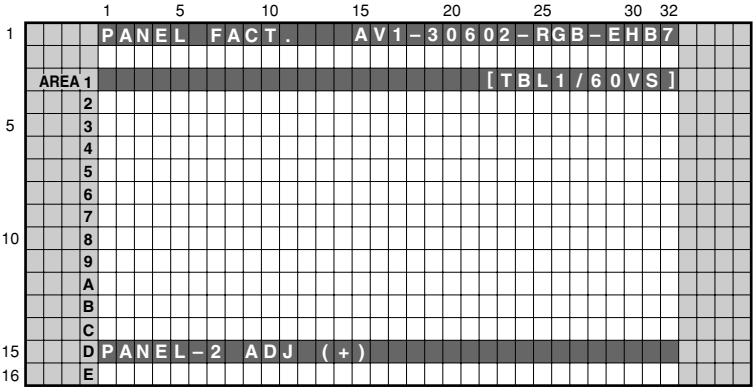

■ Key operation

<DOWN> : Shifting to PANEL REVISE (+)
<UP> : Shifting to PANEL-1 ADJ (+)
<SET> : Shifting to the next nested layer

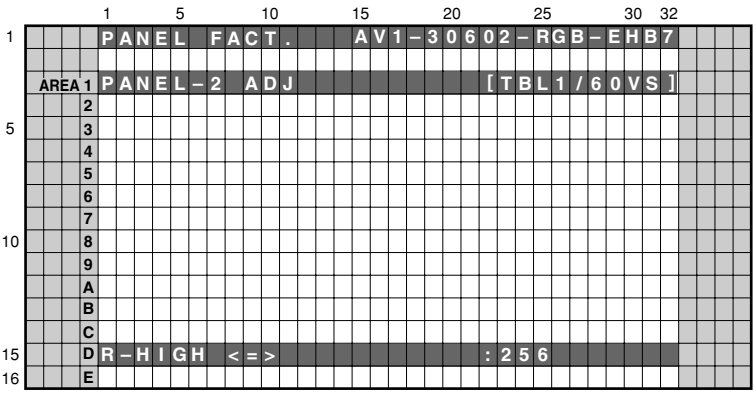

■ Key operation

<DOWN> : Shifting to the next item
<UP> : Shifting to the previous item
<RIGHT> : Adding by one to the adjustment/ setting value
<LEFT> : Subtracting by one from the adjustment/setting value
<VOL+> : Adding by 10 to the adjustment/ setting value
<VOL-> : Subtracting by 10 from the adjustment/setting value
<SET> : Determining the adjustment/setting value and shifting to the upper layer

8.2.2.7 PANEL REVISE (+)

- A setting for panel degradation correction can be made. Pressing the SET key shifts the screen to the next nested layer below for item selection.

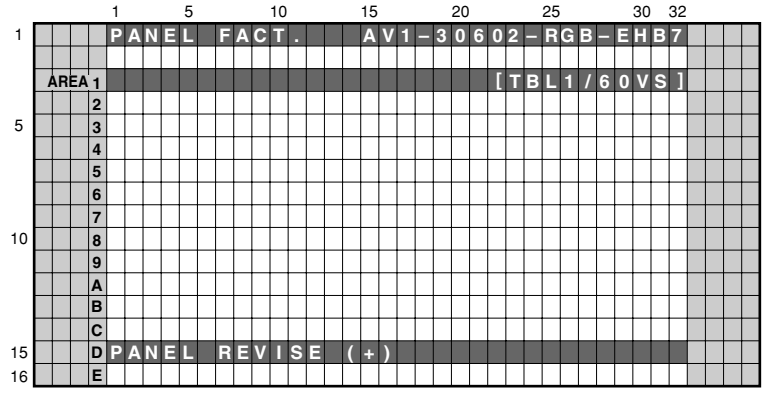

■ Key operation

<DOWN> : Shifting to ETC.(+)
<UP> : Shifting to PANEL-2 ADJ (+)
<SET> : Shifting to the next nested layer

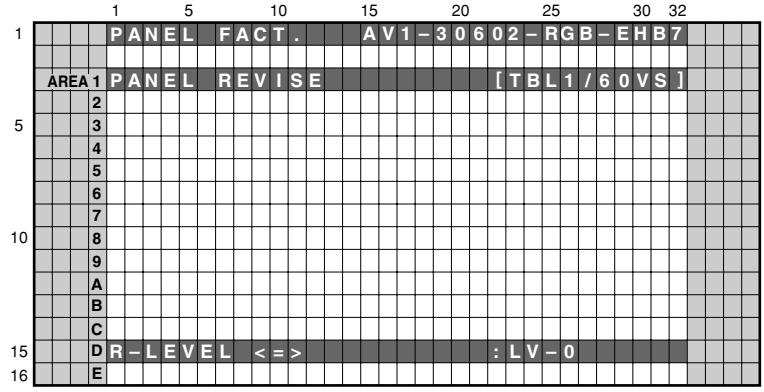

■ Key operation

<DOWN> : Shifting to the next item
<UP> : Shifting to the previous item
<RIGHT> : Adding by one to the adjustment/ setting value
<LEFT> : Subtracting by one from the adjustment/setting value
<SET> : Determining the adjustment/setting value and shifting to the upper layer

8.2.2.8 ETC. (+)

- The setting about the backup of panel adjusting value and various data on panel operational information can be cleared. Pressing the SET key shifts the screen to the next nested layer below for item selection.

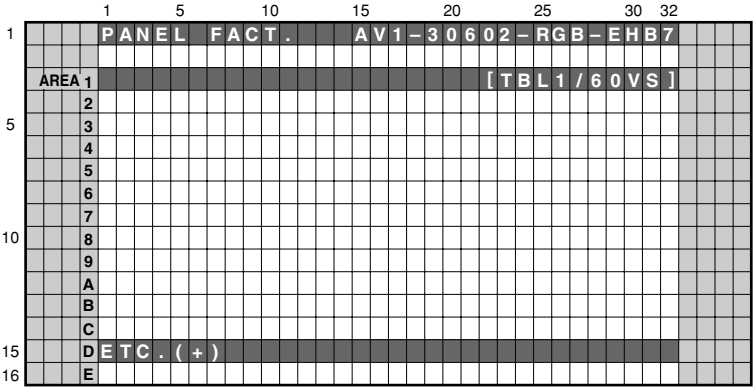

■ **Key operation**

<DOWN> : Shifting to RASTER MASK SETUP (+)
<UP> : Shifting to PANEL REVISE (+)
<SET> : Shifting to the next nested layer

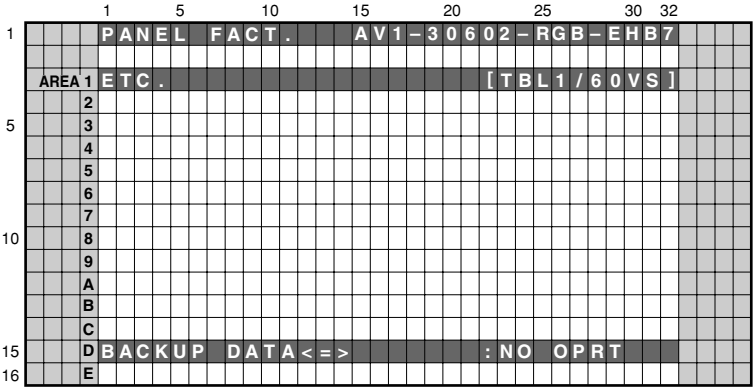

■ **Key operation**

<DOWN> : Shifting to the next item
<UP> : Shifting to the previous item
<RIGHT> : Adding by one to the adjustment/setting value
<LEFT> : Subtracting by one from the adjustment/setting value
<SET> : Determining the adjustment/setting value and shifting to the upper layer

8.2.2.9 RASTER MASK SETUP (+)

• This menu set the RASTER MASK and the drive sequence at RASTER MASK state. Pressing the SET key shifts the screen to the next nested layer below for item selection.

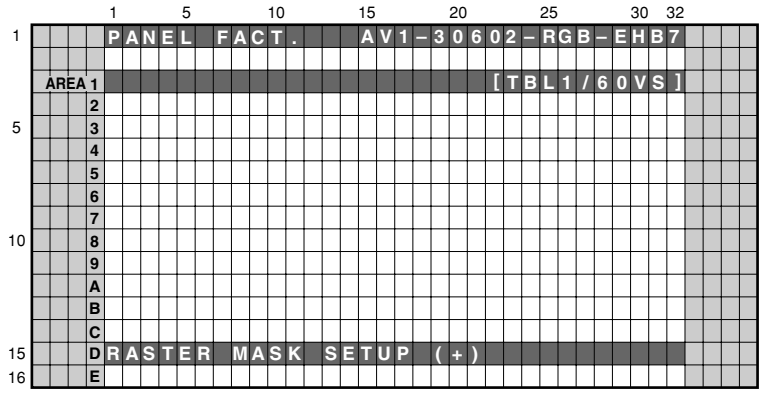

■ Key operation

<DOWN> : Shifting to PATTEN MASK SETUP (+)
<UP> : Shifting to ETC. (+)
<SET> : Shifting to the next nested layer

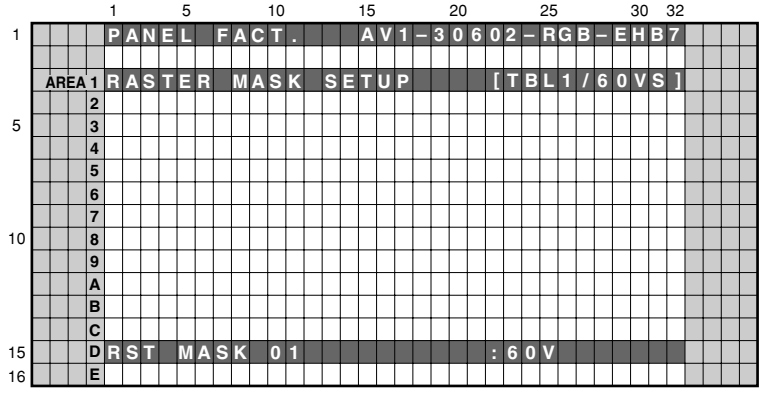

■ Key operation

<DOWN> : Shifting to the next MASK
<UP> : Shifting to the previous MASK
<RIGHT> : Changing MASK sequence (+)
<LEFT> : Changing MASK sequence (-)
<SET> : Determining the adjustment/setting value and shifting to the upper layer

• The MASK indication sequence can be changed among 48V, 50V, 60V, 72V, 75V, 60P, and 70P, using the Right or Left key. The selected sequence and the ABL/WB table are retained until the mask is turned off.
• 48 V and 60 P are deleted from the sequence, and represented by 50 V and 60 V, respectively. The ABL/WB table is changed to the PC table.

8.2.2.10 PATTEN MASK SETUP (+)

• This menu set the PATTEN MASK and the drive sequence at PATTEN MASK state.

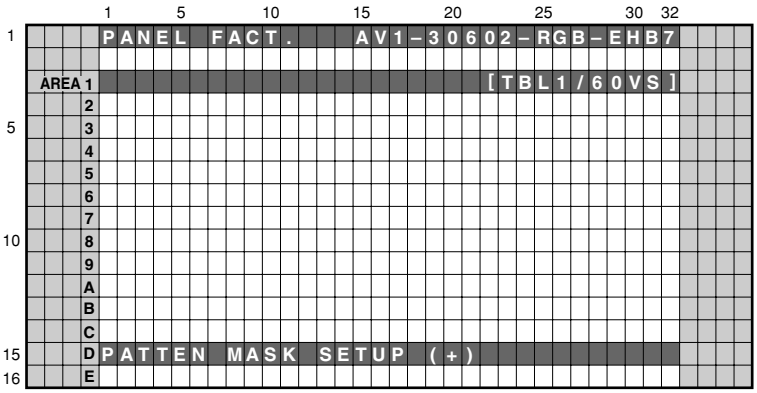

■ **Key operation**

<DOWN> : Shifting to COMBI MASK SETUP (+)
<UP> : Shifting to RASTER MASK SETUP (+)
<SET> : Shifting to the next nested layer

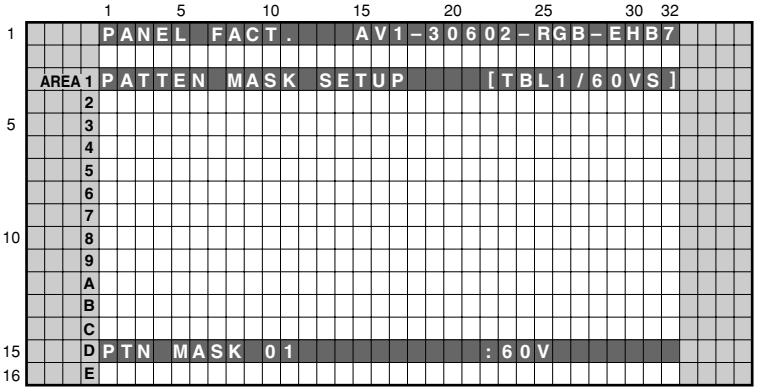

■ **Key operation**

<DOWN> : Shifting to the next MASK
<UP> : Shifting to the previous MASK
<RIGHT> : Changing MASK sequence (+)
<LEFT> : Changing MASK sequence (-)
<SET> : Determining the adjustment/setting value and shifting to the upper layer

• The MASK indication sequence can be changed among 48V, 50V, 60V, 72V, 75V, 60P, and 70P, using the Right or Left key. The selected sequence and the ABL/WB table are retained until the mask is turned off.
• 48 V and 60 P are deleted from the sequence, and represented by 50 V and 60 V, respectively. The ABL/WB table is changed to the PC table.

8.2.2.11 COMBI MASK SETUP (+)

• This menu set the COMBI MASK and the drive sequence at COMBI MASK state.

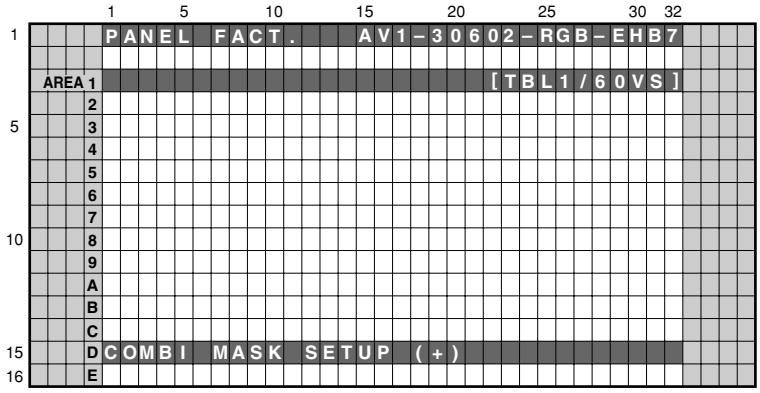

■ Key operation

<DOWN> : Shifting to PANEL INFORMATION
<UP> : Shifting to PATTEN MASK SETUP (+)
<SET> : Shifting to the next nested layer

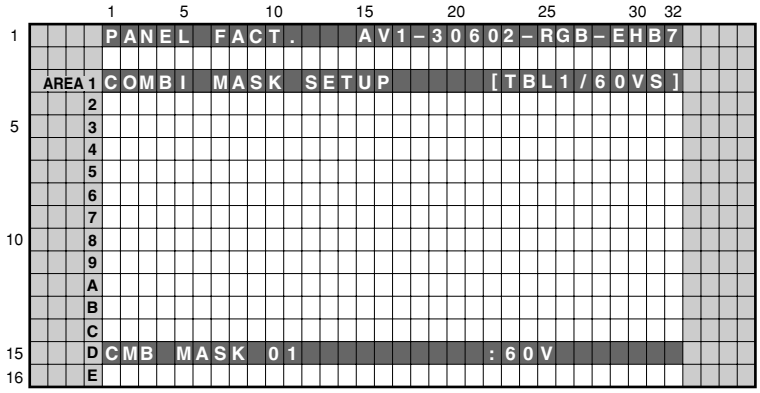

■ Key operation

<DOWN> : Shifting to the next MASK
<UP> : Shifting to the previous MASK
<RIGHT> : Changing MASK sequence (+)
<LEFT> : Changing MASK sequence (-)
<SET> : Determining the adjustment/setting value and shifting to the upper layer

• The MASK indication sequence can be changed among 48V, 50V, 60V, 72V, 75V, 60P, and 70P, using the Right or Left key. The selected sequence and the ABL/WB table are retained until the mask is turned off.
• 48 V and 60 P are deleted from the sequence, and represented by 50 V and 60 V, respectively. The ABL/WB table is changed to the PC table.

8.2.3 OPTION

Operation item

No.	Function	Content	RS2-32C
1	EDID WRITE MODE ⇔	DISABLE ⇔ ENABLE	–––
2	CH PRESET ⇔	USER ⇔ FACTORY	–––

8.2.3.1 EDID WRITE MODE

Exclusively used for production line.

8.2.3.2 CH PRESET

Exclusively used for production line.

8.2.4 INITIALIZE

Operation item

No.	Function	Content	RS2-32C
1	SYNC DET (+)	Exclusively used for technical analsyis.	–––
2	SG MODE ⇔	Paired SG_MODE with SG_PATTERN. Select SG Route.	–––
3	SG PATTERN ⇔	Paired SG_MODE with SG_PATTERN. Select SG Pattern.	–––
4	SIDE MASK LEVEL (+)	Configure the color of the side mask.	BSL, GSL, RSL
5	FINAL SETUP (+)	Initialize flash memorys on virgin product status	FST
6	CVT AUTO ⇔	Exclusively used for technical analsyis.	–––
7	HDMI INTR POSITION (+)	Exclusively used for technical analsyis.	–––

8.2.4.1 SYNC DET (+)

Exclusively used for technical analsyis (details omitted).

8.2.4.2 SG MODE

SG MODE (SG's route selection) / SG PATTERN (signal pattern selection) are used as pair.
In SG MODE, select the SG route and then select the SG pattern to be sent by the selected route.
In SG MODE, make sure to select the route first.

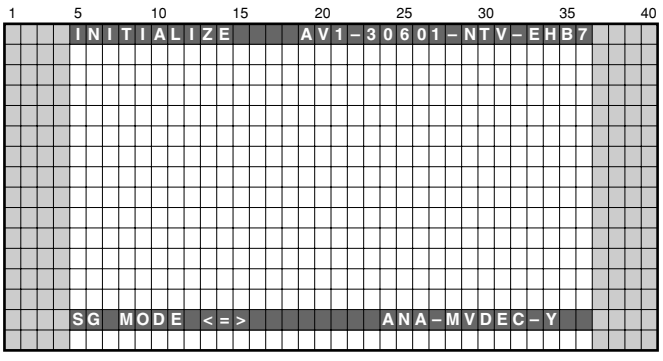

Operation item

No.	Display	Content
1	SG OFF	SG Mode is OFF.
2	DIG MVDEC YCBCR	MAIN VDEC: YCbCr (Digital output mode)
3	ANA MVDEC Y	MAIN VDEC: Y (Analog output mode: SG VDEC return setting)
4	ANA MVDEC RGB	MAIN VDEC:RGB
5	ANA SVDEC Y	SUB VDEC:Y
6	ANA AD YCBCR	AD: YcbCr (Analog output to the RGB SW)
7	ANA AD RGB	AD: RGB (Analog output to the RGB SW)

8.2.4.3 SG PATTERN

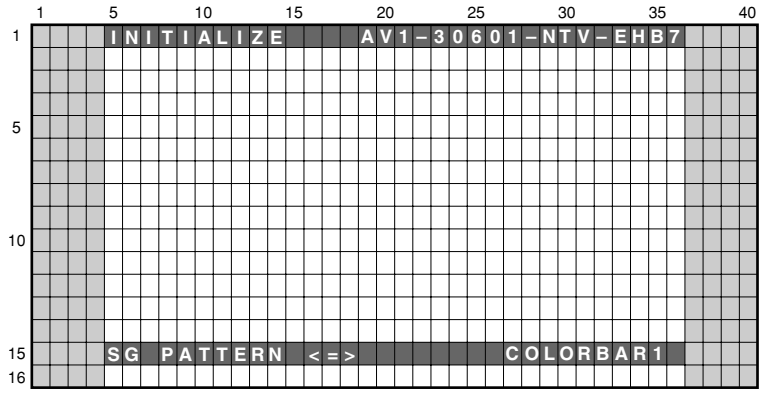

Operation item

No.	Display	SG Pattern (Brightness IRE Level/Color)	No.	Display	SG Pattern (Brightness IRE Level/Color)
1	COLOR BAR1	Colorbar (75%)	11	RASTER4	Raster (75% Green)
2	COLOR BAR2	Colorbar (100%)	12	RASTER5	Raster (75% Magenta)
3	RAMP1	Ramp (100% white)	13	RASTER6	Raster (75% Red)
4	RAMP2	Ramp (100% Yellow)	14	RASTER7	Raster (75% Blue)
5	RAMP3	Ramp (75% Green)	15	RASTER8	Raster (– % Black)
6	RAMP4	Ramp (75% Red)	16	10STEP1	10STEP (100% white)
7	RAMP5	Ramp (75% Blue)	17	10STEP2	10STEP (100% Yellow)
8	RASTER1	Raster (100% White)	18	10STEP3	10STEP (75% Green)
9	RASTER2	Raster (75% Yellow)	19	10STEP4	10STEP (75% Red)
10	RASTER3	Raster (75% Cyanide)	20	10STEP5	10STEP (75% Blue)

■ Notes when using SG MODE/SG PATTERN

- During factory mode, choose the correct route when changing.
- Basically, during VDEC SG output, make sure to connect SG output's Y or G to the AVI input terminal of VDEC.
- During SG MODE, turn off the blanking 50IRE setup function.
- During VDEC SG output, set the YC seperation setting to NTSC.
- It is possible to use ANALOG OUT MODE together during DIGITAL OUT MODE.
  The Main VDEC can output digital color difference, in which colors will appear.
  But the route to VDEC input cannot be analysed therefore care should be taken when using.
  Depending on the situation, please use the proper analog/digital output.
- The SG MODE outputs color difference and RGB only. Therefore, in the case of CVBS, only the Y input is used resulting in no color.
  This is not a damage result nor error.
- The SG MODE's ANA AD RGB (route to input 525i to AD by RGB) as a set's route, the setting does not exist. For this account the latter part from MVDEC does not have set values, resulting in having funny colors in colorbar, the brightness changes after switching, etc.
  This is not a damage result nor error.
- Depending on MVDEC's part version, ANA_MVDEC_YCBCR may not display colors.

8.2.4.4 SIDE MASK LEVEL

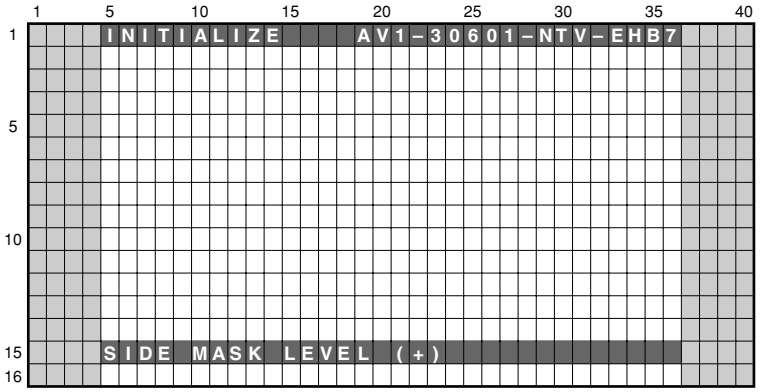

To configure sidemask's R, G, B level (To adjust the values, input signal is required).

No.	Display	Content	RS-232C
1	R MASK LEVEL ⇔	Adjust Side Mask R (Adjustable range: 000 to 255)	RSL
2	G MASK LEVEL ⇔	Adjust Side Mask G (Adjustable range: 000 to 255)	GSL
3	B MASK LEVEL ⇔	Adjust Side Mask B (Adjustable range: 000 to 255)	BSL

8.2.4.5 FINAL SETUP

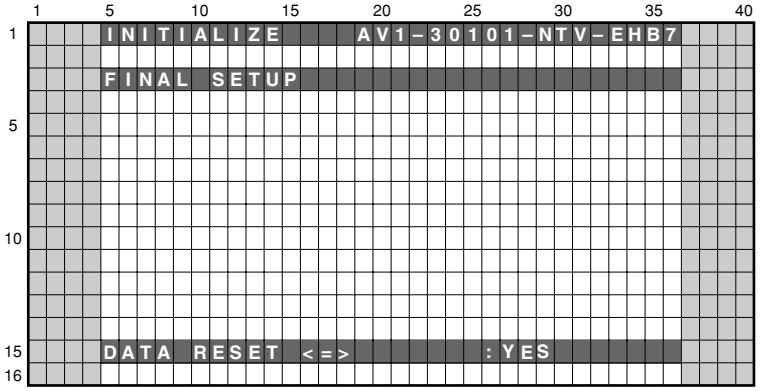

- To reset each memory value sto factory default values. Factory command is "FST".
- When the configuration is set to <NO> and the [SET] key is pressed, no action is taken and the menu returns to previous screen.
- When the configuration is set to <YES> and the [SET] key is pressed for 5 seconds, the reset action executes.

8.2.4.6 CVT AUTO

Exclusively used for technical analsyis (details omitted).

8.2.4.7 HDMI INTR POSITION (+)

Exclusively used for technical analsyis (details omitted).

9. RS-232C

9.1 OUTLINE OF RS-232C COMMAND

9.1.1 PREPARED TOOLS

It is necessary to prepare the following one to use 232C command.

- PC
- Application for control
- 232C cable (straight)

∗ It is likely not to move correctly in Win 98 faction/Me and Win for foreign countries.

∗ The setting of the Com port cannot be communicated if it doesn't do correctly.
(Please follow a set explanation of PC in the Com port)

9.1.2 USING RS-232C COMMANDS

For the PDP-4270XD, PDP-4270XA, PDP-427XD and PDP-427XA series Plasma Displays, the circuitry is structured as shown in the diagram below to support the SR+ system. Controlling with either the SR+ system or RS-232C commands can be selected.
As the SR+ system is selected at shipment, to control with RS-232C commands in servicing it is necessary to switch the paths. After servicing, be sure to return the setting to the SR+ system.

■ Rough diagram of switching between SR+ and RS-232C (STEP-UP Model Only)

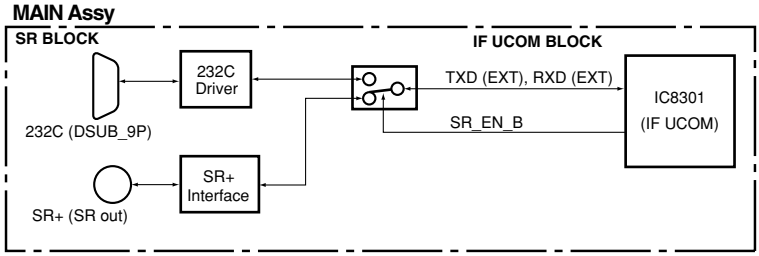

■ How to switch SR+/RS-232C (STEP-UP Model Only)

There are "How to switch SR+/RS-232C by remote control in the Standby Mode" and "How to switch SR+/RS-232C by remote control in the INTEGRATOR MENU" as a Method

① To select SR+/RS-232C by remote control in Standby Mode.
- During Standby mode, hold the keys other than the [POWER] key on the remote control, the following operation is done within 10 seconds.

To select from SR+ to RS-232C/To select from RS-232C to SR+.
- During standby mode, hold the [VOLUME+ (or -)] key on the remote control unit pressed for 3 to 10 seconds.
→Then within 3 seconds after the key is released, hold the [2-screen] key released, use the [SET (ENTER)] key on the remote control unit to set to RS-232C (the baud rate last selected is chosen) or the [HOME MENU] key to set to SR+.
- During IF Standby mode (once 10 seconds or more has passed after the LED goes dark during communication), the first keypress may not be accepted. In such a case, for a key operation, first press any key other than the [POWER] key and [CH] keys, then the desired key.
- At the switch SR+/RS-232C, the LED will be blinked on the fixed time.

② To select SR+/RS-232C in the INTEGRATOR MENU.
- How to enter INTEGRATOR MENU.
During standby mode, press the [Home Menu] key, and then press the [POWER] key within 3 seconds. During factory mode, hold the [INTEGRATOR] key.
- In INTEGRATOR MENU, there is a OSD where SR+ (or RS-232C) is turned on/off, and it switches on the screen.

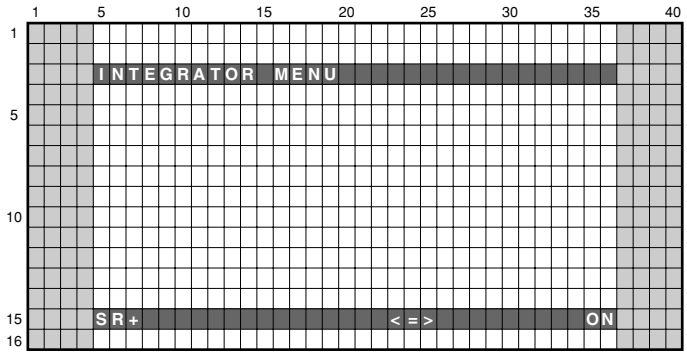

9.1.3 COMMAND PROTOCOL

■ **Communication protocol : Asynchronous serial communication by RS-232C**

Start bit length : 1 bit
Data width : 8 bit (ASCII codes/There is no distinction between the capital letter and the small letter)
Parity : None
Stop bit length : 1 bit
Baud rate : 9600 bps (Fixed)

■ **Regulating function**

Direct numerical value effective: The adjustment value can be set directly by transmitting the figure to the mark of the command.

■ **Data format**

The control signal format sent from the user side controller is as follows. When the transmission data is completed STX (02 (Hex)), the command of ETX (03 (Hex)) is arranged when beginning to communicate. And, ID, the command, and the parameter are arranged between those. Data is assumed to be ASCII form alphanumeric character. Neither the capital letter nor the small letter are distinguished.

• Only for the command

STX	ID	Command	ETX
0x02	**	□□□	0x03

• When you accompany setting/adjustment data

STX	ID	Command	Parameter	ETX
0x02	**	□□□	△△△	0x03

■ **Command processing**

When the command is input, the command processing begins processing.
ID is assumed to be 2 asterisk "**".

■ **Reception confirmation**

The module microcomputer judges right or wrong for the command received from the main side.
If it is an effective command, processing is executed. And, the reply of the received command is done when entering the following state of the command standby after processing is completed.
The replying data replies data that deletes the ID code from the reception command by the capital letter.

• When you accompany setting/adjustment data

Send data to PC

STX	ID	Command	Parameter	ETX
0x02	**	□□□	△△△	0x03

→ Receive data

STX	Command	Parameter	ETX
0x02	□□□	△△△	0x03

• Only for the command

Send data to PC

STX	ID	Command	ETX
0x02	**	□□□	0x03

→ Receive data

STX	Command	ETX
0x02	□□□	0x03

In this case, "ERR" replies if it is a command of the uncorrespondence.
The command replies "XXX" when processing on status cannot be executed even if it is effective.

• For an Invalid command

Send data to PDP system

STX	ID	Command	ETX
0x02	**	□□□	0x03

→ Receive data

STX	Command	ETX
0x02	ERR	0x03

• For the command that cannot be executed on status

Send data to PDP system

STX	ID	Command	ETX
0x02	**	□□□	0x03

→ Receive data

STX	Command	ETX
0x02	XXX	0x03

■ **Processing in the case of an error**

When the communication error occurs from STX between ETX, the processing of a pertinent command is discontinued, and the reception buffer is cleared. When STX is received, the command reception processing keeps storing the transmitted character string in the register.
And, the character string placed by the ETX reception between STX-ETX is interpreted as a command.

9.1.4 COMMAND DEFINITION

■ Single functional command

The command to which operation is concluded only by command. The command parts are 3 characters.

Send data to PC

STX	ID	Command	ETX
0x02	**	PON	0x03

→

Receive data

STX	Command	ETX
0x02	PON	0x03

■ Adjustment command and adjustment value

- The command to which value of parameter is changed attended with adjustment value. The command parts are 3 characters.
- The adjustment value is the numeric character data of the decimal number 3 characters. It is made the range of 000-999. The range that can be adjusted is different according to the function to adjust (It is noted that then, it is not uniformly to 999).

Send data to PC

STX	ID	Command	Parameter	ETX
0x02	**	CNT	128	0x03

→

Receive data

STX	Command	Parameter	ETX
0x02	CNT	128	0x03

* When the received command exceeds the range where the adjustment value can be adjusted, "XXX" is transmitted.
* When the same adjustment value is continuously transmitted two times or more, "XXX" doesn't reply, though it is an invalid command. It's overwrited, and ACK that deletes ID replies.

■ Set command and Set value

- The command to which set value of parameter is changed attended with set value. The command parts are 3 characters.
- Set values are three characters. The first character is fixed to "S". 2 remainder characters are assumed to be assumption S00-S99 as the decimal number.

Send data to PDP system

STX	ID	Command	Parameter	ETX
0x02	**	MKS	S02	0x03

→

Receive data

STX	Command	Parameter	ETX
0x02	MKS	S02	0x03

* When the received command doesn't exist as a set value, "XXX" is transmitted.
* When the same set value is continuously transmitted two times or more, "XXX" doesn't reply, though it is an invalid command. It's overwrited, and ACK that deletes ID replies.

■ State acquisition command

- The command that reports on state of operation and set value, etc. to system side.
- The content that corresponds by the kind of the command is read from the memory, when the command is received from the system side and it replies.
- The command parts are three characters. The first character is fixed to "Q". It sets since the second character according to the content of information.
- The reply data is transmitted adding various data that converts the received command and ASCII code and the checksum of the data. Because the content of the reply changes according to the kind of the "QUEST command", the data length follows an individual, individual specification.

Send data to PDP system

STX	ID	Command	ETX
0x02	**	QS1	0x03

→

Receive data

STX	Command	Parameter	ETX
0x02	QS1	•••••••••	0x03

■ Adjustment assistance command

The Adjustment Assistance Command is combined and used with the Adjustment Command.

- The Adjustment Command + Adjustment Assistance Command ⇒ It addition/subtracts it from a present adjustment value.
  Note: When the received command exceeds the range of the adjustment value, it changes to MAX/MIN.

- The adjustment command immediately before is made efficacy when only the adjustment command (addition/subtraction command) is received alone after the adjustment command receptions completed, and it makes it to the value addition/subtracted from a present adjustment value. However, it applies to the command when other commands are received.

- Kind of Adjustment Assistance Command (addition/subtraction command)
  UP1 to UP9, UP0, UPF: 1 to 10 is added to a setting value.
  UPF: It makes it to the maximum value ("VOL" command).
  DW1 to DW9, DW0, DWF: 1 to 10 is subtracted a setting value.
  DWF: It makes it to the minimum value ("VOL" command).
  FWD: One Priset CH is previously advanced ("CHN" command).
  REV: One Priset CH is returned in the front ("CHN" Command).

Send data to PDP system

STX	ID	Command	Subcommand	ETX
0x02	**	VOL	UP1	0x03

→

Receive data

STX	Command	Subcommand	ETX
0x02	VOL	UP1	0x03

9.2 LIST OF RS-232C COMMANDS

RS-232C commands can be used in Service Factory mode. Before using RS-232C commands, it is necessary to change the factory presetting. See "9.1 OUTLINE OF THE RS-232C".
[Note ; If you want to see version infomation (ex. QS1, QS6, Factory, Menu), Please see 10 seconds after starting.]

■ RS-232C command list

Command Name		Function	Active U-com		Last Memory	Effective only in Factory mode	Remarks
			MDU	MTB			
A							
ABL	***	Adjusting the upper limit of the power	●		Mod	●	
AMT	SD0	Audio mute OFF		●			
	SD1	Audio mute ON		●			
APW	S00	WB correction interlocked with APL: OFF	●			●	
	S01	WB correction interlocked with APL: ON	●			●	
B			**MDU**	**MTB**			
BCP		Copying the backup data in the EEPROM	●			●	
BHI	***	User white balance : BLUE highlight	●				
BLW	***	User white balance : BLUE lowlight	●				
BRT	***	User brightness	●				
BSM	S00	After image/Burning safe mode: OFF	●				
	S01	After image/Burning safe mode: ON	●				
BSL		Adjusting Side Mask Level BLUE		●			
• • •							
C			**MDU**	**MTB**			
CBU		Clearing backup data of EEPROM	●			●	
CHM		Clearing data of the hour meter	●			●	
CHN	FWD	Changing tuner preset channel (1 step forward)		●			
	REV	Changing tuner preset channel (1 step reverse)		●			
CHR		Clearing data of the hour meter of MTB side		●		●	
CNT	***	User contrast	●				
CMT		Clearing data of the maximum temperature	●			●	
CPC		Clearing power-on count data	●			●	
CPD		Clearing power-down histrory	●			●	
CPM		Clearing data of the pulse meter	●			●	
CSD		Clearing shutdown history	●			●	
CTM		Clearing working log	●			●	
D			**MDU**	**MTB**			
DRV	S00	Main power off	●				
	S01	Main power on	●				
DW*		To subtract *** to the adjustment value (*** = 000 to 999, designated by a function command)		●			
E			**MDU**	**MTB**			
ESV	S00	Setting Power Consumption mode to normal sequence & normal curve	●				
	S01	Setting Power Consumption mode to silent sequence & normal curve	●				
	S02	Setting Power Consumption mode to silent sequence & power-saving curve	●				
	• • •						
	• • •						
	• • •						
F			**MDU**	**MTB**			
FAJ		Determining the flag of the DIGITAL Assy adjustment in "adjustment is completed"	●			●	
FAN		Factory mode off	●	●		●	
FAY		Factory mode on	●	●			
FST		Set each memory setting of MTB side to the shipment state.		●			
G			**MDU**	**MTB**			
GHI	***	User white balance : GREEN highlight	●				
GLW	***	User white balance : GREEN lowlight	●				
GSL		Green side mask level adjustment		●		●	

Command Name		Function	Active U-com		Last Memory	Effective only in Factory mode	Remarks
			MDU	MTB			
I							
INA	• • •						
	• • •						
	***	Switching the terrestrial analog signal		●			
INB							
INC	***	Switching the terrestrial digital signal (EUC is Step-upD and RegularD only, and IBD is AU only)		●			
IND							
INE							
INF							
ING							
INH							
INP	S01	Input switch: INPUT 1		●			
	S02	Input switch: INPUT 2		●			
	S03	Input switch: INPUT 3		●			
	S04	Input switch: INPUT 4		●			
	S05	Input switch: INPUT 5 (Step-up Only)		●			
	S06	Input switch: INPUT 6 (PC. Step-up Only)		●			
K			**MDU**	**MTB**			
KDD							
M			**MDU**	**MTB**			
MKC	S00	MASK off	●		Mod	●	
	S01	H ramp (slant 1) M	●		Mod	●	
	S02	H ramp (slant 4) M	●		Mod	●	
	S03	Slanting ramp M	●		Mod	●	
	S04	30 for aging	●		Mod	●	
	S05	05 for aging	●		Mod	●	
	S06	Erasing afterimage 1	●		Mod	●	
	S07	Erasing afterimage 2 (RGB: zigzag, V: reverse)	●		Mod	●	
	S08	White (change in luminance level)	●		Mod	●	
	S09	PEAK SEEK RASTER	●		Mod	●	
	S10	For engineering use	●		Mod	●	
MKS	S00	MASK off	●		Mod		
	S01	H ramp (slant 1)	●		Mod	●	
	S02	H ramp (slant 4)	●		Mod	●	
	S03	V ramp (slant 1)	●		Mod	●	
	S04	Slanting ramp	●		Mod	●	
	S05	Window (Hi= 870, Lo= 102)	●		Mod	●	
	S06	Window (Hi= 1023, Lo= 102)	●		Mod	●	
	S07	Window (Hi= 1023)	●		Mod	●	
	S08	Window (Hi= 1023) 4 %	●		Mod	●	
	S09	Window (Hi= 1023) 1.25 %	●		Mod	●	
	S10	Window (1/7 LINE)	●		Mod	●	
	S11	STRIPE (MGT/GRN)	●		Mod	●	
	S12	STRIPE (GRN/MGT)	●		Mod	●	
	S13	B & W, checker (1 line)	●		Mod	●	
	S14	B & W, checker (2 lines)	●		Mod	●	

Command Name		Function	Active U-com		Last Memory	Effective only in Factory mode	Remarks
			MDU	MTB			
M							
MKS	S15	B & W, checker (4 lines)	●		Mod	●	
	S16	B & W, checker (8 lines)	●		Mod	●	
	S17	COLOR BAR	●		Mod	●	
	S18	Slanting lines	●		Mod	●	
	S19	Red & black, checker (1 line)	●		Mod	●	
	S20	Red & black, checker (2 lines)	●		Mod	●	
	S21	Red & black, checker (4 ines)	●		Mod	●	
	S22	Red & black, checker (8 lines)	●		Mod	●	
	S23	RGB zigzag, V reverse	●		Mod	●	
	S24	SUS 2000 pulses (black raster)	●		Mod	●	
	S25	Window (Hi= 870, Lo= 102) Pattern 3	●		Mod	●	
	S26	Window (Hi= 1023, Lo= 102) Pattern 3	●		Mod	●	
	S27	Window (Hi= 1023) Pattern 3	●		Mod	●	
	S28	Window (Hi= 1023) 4 % Pattern 3	●		Mod	●	
	S29	Window (Hi= 1023) 1.25 % Pattern 3	●		Mod	●	
	S30	Window (1/7 LINE) Pattern 3	●		Mod	●	
	S31	Noise ON - White	●		Mod	●	
	S32	Noise ON - Red	●		Mod	●	
	S33	Noise ON - Green	●		Mod	●	
	S34	Noise ON - Blue	●		Mod	●	
	S35	Noise ON - Black	●		Mod	●	
	S36	For engineering use	●		Mod	●	
	S37	For engineering use	●		Mod	●	
	S38	For engineering use	●		Mod	●	
	S39	For engineering use	●		Mod	●	
	S51	Raster - White	●		Mod	●	
	S52	Raster - Red	●		Mod	●	
	S53	Raster - Green	●		Mod	●	
	S54	Raster - Blue	●		Mod	●	
	S55	Raster - Black	●		Mod	●	
	S56	Raster - Cyan	●		Mod	●	
	S57	Raster - Magenta	●		Mod	●	
	S58	Raster - Yellow	●		Mod	●	
	S59	RASTER09: Red 588	●		Mod	●	
	S60	RASTER10: Cyan 460	●		Mod	●	
	S61	RASTER11: Green 774	●		Mod	●	
	S62	RASTER12: Gray 313	●		Mod	●	
	S63	RASTER13: Gray 912	●		Mod	●	
	S64	RASTER14: Magenta1023	●		Mod	●	
	S65	RASTER15: Pale orange	●		Mod	●	
	S66	RASTER16: Sky color	●		Mod	●	
	S67	RASTER17: Pale purple	●		Mod	●	
	S68	RASTER18: Magenta 54	●		Mod	●	
	S69	RASTER19: Red 1023+	●		Mod	●	
	S70	RASTER20: Green 1023+	●		Mod	●	
	S71	RASTER21: Blue 1023+	●		Mod	●	
	S72	RASTER22: Red 588+	●		Mod	●	
	S73	RASTER23: Green 588+	●		Mod	●	
	S74	RASTER24: Blue 588+	●		Mod	●	

Command Name		Function	Active U-com		Last Memory	Effective only in Factory mode	Remarks
			MDU	MTB			
M							
MST	S00	Display one screen		●			
	S01	PsideP (Main size : normal)		●			
	S02	PinP (Right_down)		●			
	S03	PinP (Right_up)		●			
	S04	PinP (Left_up)		●			
	S05	PinP (Left_down)		●			
	S06	PsideP (Main size : center)		●			
	S07	PsideP (Main size : large)		●			
	S08	SWAP (Exchanging sub-screen)		●			
O							
OSD	S00	Turning OSD setting to off		●			
	S01	Turning OSD setting to on		●			
P							
PAV	S**	Switching panel functions interlocked with the AV selection	●				
PBH	***	Panel white balance adjustment - Blue highlight	●		Mod	●	
PBL	***	Panel white balance adjustment - Blue low light	●		Mod	●	
PDM	S00	Passing PD signals to the Power SUPPLY Unit => Power-down	●				
	S01	Not passing PD signals to the Power SUPPLY Unit => No power-down	●				
PFN		Factory mode: off	●			●	
PFS		Setup at shipment	●			●	
PFY		Factory mode: on	●			●	
PGH	***	Panel white balance adjustment - Green highlight	●		Mod	●	
PGL	***	Panel white balance adjustment - Green low light	●		Mod	●	
PGM	S**	Setting of the gamma table	●				
PMT	S00	Canceling panel muting	●				
	S01	Panel muting	●				
POF		Power off	●	●	Main		
PON		Power on	●	●	Main		
PPT	S00	Panel protection: off	●			●	
	S01	Panel protection: on	●			●	
PRH	***	Panel white balance adjustment - Red highlight	●		Mod	●	
PRL	***	Panel white balance adjustment - Red low light	●		Mod	●	
PUC	S00	Pure cinema: off	●	●		●	
	S01	Pure cinema: standard	●	●		●	
	S02	Pure cinema: advanced	●	●		●	
Q							
QAJ		Acquiring various adjustment values	●				
QIP		Acquiring various input signal data	●				
QMT		Acquiring temperature of MTB side and Fan speed		●			
QNG		Acquiring shut-down information of MTB side		●			
QPD		Acquiring logs of power-down points	●				
QPM		Acquiring data of the pulse meter	●				
QPW		Acquiring panel white balance adjustment values	●				
QS1		Acquiring unit data, such as the software version common to all models, regardless of destination	●	●			
QS2		Acquiring data on the status of the unit, such as temperature	●				
QS6		Acquiring unit data, such as the software version common to all models, regardless of destination		●			
QSD		Acquiring data on shutdown	●				

Command Name		Function	Active U-com		Last Memory	Effective only in Factory mode	Remarks
			MDU	MTB			
Q							
QSI		Acquiring data related with signals	●				
R							
RBL	S**	Setting of blue level for panel degradation correction	●		Mod	●	
RGL	S**	Setting of green level for panel degradation correction	●		Mod	●	
RHI	***	User white balance - Red highlight	●				
RLW	***	User white balance - Red low light	●				
RRL	S**	Setting of red level for panel degradation correction	●		Mod	●	
RSL	***	Adjustment of the Red side mask level		●		●	
RSW	***	Adjustment of the width of XY reset pulse 1	●		Mod	●	
RYW	***	Adjustment of the width of XY reset pulse 2	●		Mod	●	
S							
SDM	S00	Shutdown enabled	●				
	S01	Shutdown prohibited	●				
SFR	S01	Measures against AM radio noise - Pattern 1	●		Mod	●	
	S02	Measures against AM radio noise - Pattern 2	●		Mod	●	
	S03	Measures against AM radio noise - Pattern 3	●		Mod	●	
	S04	Measures against AM radio noise - Pattern 4	●		Mod	●	
	S05	Measures against AM radio noise - Pattern 5	●		Mod	●	
	S06	Measures against AM radio noise - Pattern 6	●		Mod	●	
	S07	Measures against AM radio noise - Pattern 7	●		Mod	●	
	S08	Measures against AM radio noise - Pattern 8	●		Mod	●	
SMM	S**	Setting of the effective area during streaking correction	●			●	
SN0	***	Setting of the serial No. 0 (panel)	●		Mod	●	
SN1	***	Setting of the serial No. 1 (panel)	●		Mod	●	
SN2	***	Setting of the serial No. 2 (panel)	●		Mod	●	
SN3	***	Setting of the serial No. 3 (panel)	●		Mod	●	
SN4	***	Setting of the serial No. 4 (panel)	●		Mod	●	
SZM	S00	Setting the screen size to Dot by Dot or PARTIAL		●			
	S01	Setting the screen size to 4 :3		●			
	S02	Setting the screen size to FULL or FULL1080i		●			
	S03	Setting the screen size to ZOOM		●			
	S04	Setting the screen size to CINEMA		●			
	S05	Setting the screen size to WIDE		●			
	S06	Setting the screen size to FULL 14 : 9		●			
	S07	Setting the screen size to CINEMA 14 : 9		●			
	S08	Setting the screen size to FULL1035		●			
T							
–		–					
U							
UAJ		Determining the flag for the DIGITAL Assy adjustment in "not adjusted"	●				
UP*		To add *** to the adjustment value (*** = 000 to 999, designated by a function command)		●			

Command Name		Function	Active U-com		Last Memory	Effective only in Factory mode	Remarks
			MDU	MTB			
V							
VFQ	S01	Setting the frequency in Mask mode to VD-48 Hz	●		Mod	●	
	S02	Setting the frequency in Mask mode to VD-50 Hz	●		Mod	●	
	S03	Setting the frequency in Mask mode to VD-60 Hz	●		Mod	●	
	S05	Setting the frequency in Mask mode to VD-72 Hz	●		Mod	●	
	S06	Setting the frequency in Mask mode to VD-75 Hz	●		Mod	●	
	S13	Setting the frequency in Mask mode to PC-60 Hz	●		Mod	●	
	S14	Setting the frequency in Mask mode to PC-70 Hz	●		Mod	●	
	S22	Setting the frequency in Mask mode to VD-50 Hz (nonstandard)	●		Mod	●	
	S23	Setting the frequency in Mask mode to VD-60 Hz (nonstandard)	●		Mod	●	
	S25	Setting the frequency in Mask mode to VD-72 Hz (nonstandard)	●		Mod	●	
	S26	Setting the frequency in Mask mode to VD-75 Hz (nonstandard)	●		Mod	●	
VOF	***	Adjustment of the reference value of Vofs voltage	●			●	
VOL	UP*, DW*, ***	To adjust the volume (to be used in combination with UP*/DW*)		●			
VRP	***	Adjustment of the reference value of Vrst-p voltage	●			●	
VSU	***	Adjustment of the reference value of Vsus voltage	●			●	
W							
WBI	S00	Panel WB standard output mode: off	●			●	
WBI	S01	Panel WB standard output mode: on	●			●	
X							
XSB	***		●		Mod	●	
Y							
YSB	***	Y-SUS-B ADJ	●		Mod	●	
YTB	***	Y-SUSTAIL T2 ADJ	●		Mod	●	
YTG	***	Y-SUSTAIL T1 ADJ	●		Mod	●	
YTW	***	Y-SUSTAIL W ADJ	●		Mod	●	
Z							
ZDT							
ZME		Initializing the video EEPROM data		●		●	
ZPR		Initializing the setting data to which no adjustment command is provided	●			●	

9.3 OUTLINE OF EACH COMMANDS

9.3.1 ACQUISITION OF PANEL STATUS • • • [QS1]

Model information and version information are returned.

Command Format	Effective Operation Modes	Function	Remarks
[QS1]	Every Time	Output of status	Return data: 105 Byte

Data Arrangement		Data Length	Output Example
ECO		3 byte	QS1 (Fixed)
1	Display information 1 (Resolution/inch size)	1 byte	F
2	Display information 2 (Panel Generation)	1 byte	7: G7
3	Display information 3 (Destination)	1 byte	A: USA
4	Display information 4 (System Type)	1 byte	*
5	Display information 5 (Panel Product Form)	1 byte	B
6	MDUcom-Boot	3 byte	01A
7	MDUcom-Prg	8 byte	
8	Seq Prs-Boot	3 byte	01A
9	Seq Prs-Prg	8 byte	
10	SQ-VIDEO	4 byte	
11	SQ-PC	4 byte	
12	Panel Type	1 byte	P/F
13	Reserved (*)	7 byte	*******
14	, (comma)	1 byte	
15	MTB information 1 (Generation)	1 byte	7: G7
16	MTB information 2 (Regional model)	1 byte	A: USA
17	MTB information 3 (Grade)	1 byte	H: Elite
18	MTB information 4 (System Type)	1 byte	B
19	Common version for IF microcomputer	4 byte	
20	Common version for Main microcomputer	8 byte	
21	Boot version of Main microcomputer	4 byte	
22	Common version for Multi-processor	8 byte	
23	Boot version of Multi-processor	4 byte	
24	Reserved (*)	24 byte	
25	Check Sum	2 byte	FF

1: Resolution/Inch size	
3	1024*768/42
4	1024*768/43
5	1280*768/50
6	1365*768/50
7	1365*768/60
F	1920*1080/50

2: Panel Generation	
6	G6
7	G7
8	G8
9	G9
0	G10

3: Destination	
*	Commonness
A	US (Reserved)
E	EU (Reserved)
J	Japan (Reserved)

4: System Type	
*	Commonness
Z	Evaluation

5: Panel Product Form	
S	System model
B	All-in-one design TV
M	Monitor
D	Standard module
E	Simple module

12: Panel Type	
P	The past
F	High-effiective

15: MTB/MB Generation	
6	G6
7	G7
8	G8
9	G9
0	G10

16: Regional Model	
J	JP
A	US
E	EU
G	GE
C	CH
U	AU

17: MTB/MB Grade	
H	Elite/DXA/Step-upD
T	Step-upA/XG/TXC/Regular (US)
B	Not used (For Future)
S	RegularD
R	RegularA

18: MTB/MB Product Form	
S	System model
B	One body model (SX)
M	Monitor (FHD)

19 to 23: MTB/MB-side's information	
IF uCON	Common version of IF microcomputer
Main uCON	Common version of Main microcomputer
Main uCON-Boot	Boot version of Main microcomputer
Multi-prs	Common version of Multi-processor program
Multi Prs-Boot	Boot version of Multi-processor program

9.3.2 ACQUISITION OF PANEL OPERATION DATA • • • [QS2]

The command QS2 is for acquiring data on the panel's operational information.

Command Format	Effective Operation Modes	Function	Remarks
[QS2]	All operations	To acquire data on operations of the panel	Return data: 3 (ECO)+23(DATA)+2(CS)= 28 Byte

Data Arrangement		Data Length	Output Example
ECO		3 byte	QS2
1	Notification of mode shifting to STB	1 byte	1
2	Flag for adjustment of the main unit	1 byte	0
3	Flag for adjustment-data backup	1 byte	0
4	"1st PD" data	1 byte	0
5	"2nd PD" data	1 byte	0
6	Still picture detection	1 byte	0
7	Reserved	2 byte	**
8	Temperature data (TEMP 1)	3 byte	128 (*1)
9	SD main data	1 byte	0
10	SD sub data	1 byte	0
11	Operation status induced by SD	1 byte	0
12	Data from the hour meter	8 byte	00000259 (*2)
13	MASK indication	1 byte	0
CS		2 byte	4A

Note : (*1) The unit scale is centigrade. The data is A/D value from the thermal sensor.
(*2) "00000259" of "Data from the hour meter" means 2 hours 59 minuts.

1: Notification of mode shifting to Standby	
0	Entering Standby mode failed
1	Entering Standby mode succeeded

2: Adjustment of the main unit	
0	Adjustment completed
1	Adjustment not completed

3: Adjustment-data backup	
0	With backup data
1	No data (default)

4, 5: PD data	
0	No PD data
1	Not used
2	POWER
3	SCAN
4	SCN-5V
5	Y-DRV
6	Y-DCDC
7	Y-SUS
8	ADRS
9	X-DRV
A	X-DCDC
B	X-SUS
C	Not used
D	Not used
E	Not used
F	UNKNOWN

6: Still picture detection	
0	Normal screen
1	Still picture

9: SD main data	
0	No SD
1	SQ-IC
2	MDU-IIC
3	RST2
4	TEMP

10-1: SD-Sub (SQ-IC)	
0	No SD-Sub data
1	Communication error
2	Drive stop
3	BUSY
6	Version mismatching

10-2: SD-Sub (IIC)	
0	No SD-Sub data
1	EEPROM
2	BACKUP
3	DAC

10-3: SD-Sub (TEMP)	
0	No SD-Sub data
1	TEMP1
2	Reserved

11: Operation status induced by SD	
0	Normal
1	Relay-off completed
2	During warning indication

13: MASK indication	
0	MASK-OFF
1	MASK-ON

9.3.3 ACQUISITION OF OTHER DATA ON THE PANEL • • • [QIP]

The command QIP is for acquiring data on operational information of the panel.

Command Format	Effective Operation Modes	Function	Remarks
[QIP]	All operations	To acquire data on operations of the panel	Return data: 3 (ECO)+58(DATA)+2(CS)= 63 Byte

Data Arrangement		Data Length	Output Example
ECO		3 byte	QIP
1	SERIAL	15 byte	- - - - - - - - - - - - - - -
2	HOUR METER	8 byte	00000000
3	TOTAL HOUR METER	8 byte	00000000
4	PON COUNTER	8 byte	00000000
5	TEMP1 acquisition (Temperature value)	5 byte	+23.5 (*1)
6	TEMP0 acquisition (Temperature value)	5 byte	+28.7 (*1)
7	MAX-TEMP1 acquisition (Temperature value)	5 byte	+78.3 (*1)
8	Reserved	4 byte	****
CS		2 byte	94

Note
(*1) : Centigrade scale

9.3.4 ACQUISITION OF PANEL ADJUSTMENT DATA (COMMON DATA) • • • [QAJ]

The command QAJ is for acquiring the panel's factory-preset data.

Command Format	Effective Operation Modes	Function	Remarks
[QAJ]	All operations	To acquire data on operations of the panel	Return data: 3 (ECO)+41(DATA)+2(CS)= 46 Byte

Data Arrangement		Data Length	Output Example
ECO		3 byte	QAJ
1	V-SUS adjustment value	3 byte	128
2	V-OFT adjustment value	3 byte	128
3	V-RST-P adjustment value	3 byte	128
4	Reserved	3 byte	***
5	XSB adjustment value	3 byte	128
6	YSB adjustment value	3 byte	128
7	YTG adjustment value	3 byte	128
8	YTW adjustment value	3 byte	128
9	RSW adjustment value	3 byte	128
10	YTB adjustment value	3 byte	128
11	RYW adjustment value	3 byte	128
12	R-REVICE setting value	1 byte	0
13	G-REVICE setting value	1 byte	0
14	B-REVICE setting value	1 byte	0
CS		2 byte	B7

• For each REVISE setting value, the level set for RRL, RGL, or RBL is transmitted as one character.

9.3.5 ACQUISITION OF ABL/WB ADJUSTMENT DATA • • • [QPW]

The command QPW is for acquiring the factory-preset data about the video of the panel.

Command Format	Effective Operation Modes	Function	Remarks
[QPW]	All operations	To acquire data on operations of the panel	Return data: 3 (ECO)+35(DATA)+2(CS)= 40 Byte

Data Arrangement		Data Length	Output Example
ECO		3 byte	QPW
1	Drive sequence	3 byte	60V
2	Standard/nonstandard	1 byte	S
3	Type of ABL/WB tables	2 byte	T2
4	ABL adjustment value	3 byte	128
5	R-HIGH adjustment value	3 byte	256
6	G-HIGH adjustment value	3 byte	256
7	B-HIGH adjustment value	3 byte	256
8	R-LOW adjustment value	3 byte	512
9	G-LOW adjustment value	3 byte	512
10	B-LOW adjustment value	3 byte	512
11	Gamma setting	1 byte	A
12	Streaking correction	1 byte	1
13	Peripheral luminance correction	1 byte	0
14	Reserved	1 byte	*
15	WB interlocked with APL	1 byte	0
16	Transition of protective operations	1 byte	0
17	Reserved	2 byte	**
CS		2 byte	37

1: Drive sequence

48V	Video 48 Hz
50V	Video 50 Hz
60V	Video 60 Hz
72V	Video 72 Hz
75V	Video 75 Hz
60P	PC 60 Hz
70P	PC 70 Hz

2: Standard/ nonstandard

S	Standard
N	Nonstandard

3: Type of ABL/WB tables

Tn	n: 1 to 4

11: Gamma setting

n	0 to F

12, 15: Setting for Items 12 and 15

0	OFF
1	ON

13: Peripheral luminance correction

0	OFF
2	ON (interlocked with APL)

16: Transition of brightness by protective operations

0	Upper limit state for brightness
1	Brightness being reduced
2	Lower limit state for brightness
3	Brightness being increased

9.3.6 ACQUISITION OF PULSE METER VALUE • • • [QPM]

The command QPM is for acquiring the accumulated number of pulses of the panel.

Command Format	Effective Operation Modes	Function	Remarks
[QPM]	All operations	To acquire data on operations of the panel	Return data: 3 (ECO)+40(DATA)+2(CS)= 45 Byte

Data Arrangement		Data Length	Output Example
ECO		3 byte	QPM
1	Pulse meter B 1	8 byte	00000000
2	Pulse meter B 2	8 byte	00000000
3	Pulse meter B 3	8 byte	00000000
4	Pulse meter B 4	8 byte	00000000
5	Pulse meter B 5	8 byte	00000000
CS		2 byte	E7

9.3.7 ACQUISITION OF PD LOGS • • • [QPD]

The command QPD is for acquiring data from the 8 latest power-down (PD) logs.

Command Format	Effective Operation Modes	Function	Remarks
[QPD]	All operations	To acquire data on the power-down logs	Return data: 3 (ECO)+80(DATA)+2(CS)= 85 Byte

Data Arrangement		Data Length	Output Example
ECO		3 byte	QPD
1	Latest "1st PD" data	1 byte	A
2	Latest "2nd PD" data	1 byte	2
3	Data from the hour meter for the latest PD	8 byte	00010020
4	Second latest "1st PD" data	1 byte	E
5	Second latest "2nd PD" data	1 byte	9
6	Data from the hour meter for the second latest PD	8 byte	00008523
7	Third latest "1st PD" data	1 byte	4
8	Third latest "2nd PD" data	1 byte	3
9	Data from the hour meter for the third latest PD	8 byte	00004335
10	Fourth latest "1st PD" data	1 byte	2
11	Fourth latest "2nd PD" data	1 byte	0
12	Data from the hour meter for the fourth latest PD	8 byte	00000945
13	Fifth latest "1st PD" data	1 byte	4
14	Fifth latest "2nd PD" data	1 byte	0
15	Data from the hour meter for the fifth latest PD	8 byte	00000715
16	Sixth latest "1st PD" data	1 byte	A
17	Sixth latest "2nd PD" data	1 byte	2
18	Data from the hour meter for the sixth latest PD	8 byte	00000552
19	Seventh latest "1st PD" data	1 byte	A
20	Seventh latest "2nd PD" data	1 byte	0
21	Data from the hour meter for the seventh latest PD	8 byte	00000213
22	Eighth latest "1st PD" data	1 byte	D
23	Eighth latest "2nd PD" data	1 byte	0
24	Data from the hour meter for the eighth latest PD	8 byte	000001A7
CS		2 byte	27

1, 2, 4, 5: PD data	
0	No PD
1	Not used
2	P-POWER
3	SCAN
4	SCN-5V
5	Y-DRIVE
6	Y-DCDC
7	Y-SUS
8	Address
9	X-DRIVE
A	X-DCDC
B	X-SUS
C	Not used
D	Not used
E	Not used
F	UNKNOWN

9.3.8 ACQUISITION OF SD LOGS • • • [QSD]

The command QSD is for acquiring the data from the 8 latest shutdown (SD) logs.

Command Format	Effective Operation Modes	Function	Remarks
[QSD]	All operations	To acquire data on the shutdown logs	Return data: 3 (ECO)+80(DATA)+2(CS)= 85 Byte

Data Arrangement		Data Length	Output Example
ECO		3 byte	QSD
1	Latest SD data	1 byte	1
2	Latest SD subcategory data	1 byte	0
3	Data from the hour meter for the latest SD	8 byte	00752013
4	Second latest SD data	1 byte	5
5	Second latest SD subcategory data	1 byte	0
6	Data from the hour meter for the second latest SD	8 byte	00495204
7	Third latest SD data	1 byte	2
8	Third latest SD subcategory data	1 byte	3
9	Data from the hour meter for the third latest SD	8 byte	00100355
10	Fourth latest SD data	1 byte	2
11	Fourth latest SD subcategory data	1 byte	5
12	Data from the hour meter for the fourth latest SD	8 byte	00075620
13	Fifth latest SD data	1 byte	1
14	Fifth latest SD subcategory data	1 byte	0
15	Data from the hour meter for the fifth latest SD	8 byte	00000852
16	Sixth latest SD data	1 byte	2
17	Sixth latest SD subcategory data	1 byte	5
18	Data from the hour meter for the sixth latest SD	8 byte	000000451
19	Seventh latest SD data	1 byte	0
20	Seventh latest SD subcategory data	1 byte	0
21	Data from the hour meter for the seventh latest SD	8 byte	00000000
22	Eighth latest SD data	1 byte	0
23	Eighth latest SD subcategory data	1 byte	0
24	Data from the hour meter for the eighth latest SD	8 byte	00000000
CS		2 Byte	7D

● SD data	
0	No SD
1	SQ-IC
2	MDU-IIC
3	RST2
4	TEMP

● SD subcategory (SQ-IC)	
0	No SD-Sub data
1	Communication error
2	Drive stop
3	BUSY
6	Version mismatching

● SD subcategory (MDU-IIC)	
0	No SD-Sub data
1	EEPROM
2	BACKUP
3	DAC

● SD subcategory (TEMP)	
0	No SD-Sub data
1	TEMP1
2	Reserved

9.3.9 QS6

Induce it peculiar, individual information is acquired.

Command Format	Effective Operation Modes	Function	Remarks
[QS6]	Every time	Output of status	

Order	Part	Data Arrangement	Data Length	Remarks
00	–	Received Command name	3 byte	QS6
01		DTB version	4 byte	
02		Reserved	8 byte	
03		TELE-TEXT version	60 byte	
04		USER PASSWORD	4 byte	
05	–	Check Sum	2 byte	

9.3.10 QMT

Temperature information (TEMP2) / FAN rotation state information on the MTB side is returned.

Command Format	Effective Operation Modes	Function	Remarks
[QMT]	Every time	Output of status	MTB-side's temperature/FAN rotating status

Order	Part	Data Arrangement	Data Length	Remarks
0	–	Received Command name	3 byte	QMT
01	MTB	MTB-side Temperature (TEMP2)	3 byte	
02		MTB-side FAN rotating speed	1 byte	0: STOP 1: LOW, 5: HIGH, 3: MIDDLE (FHD only)

9.3.11 QNG

MTB/MB side's shutdown information is acquired.

Command Format	Effective Operation Modes	Function	Remarks
[QNG]	Every time	Output of status	

Order	Part	Data Arrangement	Data Length	Remarks
00	–	Received Command name	3 byte	QNG
01	MTB	1st latest NG No.	1 byte	
02		Subcategory No. for the 1st latest NG.	1 byte	
03		MTB hour meter for the 1st latest NG.	7 byte	
04		Temperature for the 1st latest NG.	3 byte	
05		2nd latest NG No.	1 byte	
06		Subcategory No. for the 2nd latest NG.	1 byte	
07		MTB hour meter for the 2nd latest NG.	7 byte	
08		Temperature for the 2nd latest NG.	3 byte	
09		3rd latest NG No.	1 byte	
10		Subcategory No. for the 3rd latest NG.	1 byte	
11		MTB hour meter for the 3rd latest NG.	7 byte	
12		Temperature for the 3rd latest NG.	3 byte	
:		:	:	
29		8th latest NG No.	1 byte	
30		Subcategory No. for the 8th latest NG.	1 byte	
31		MTB hour meter for the 8th latest NG.	7 byte	
32		Temperature for the 8th latest NG.	3 byte	
33	–	Check Sum	2 byte	

< SD Information No. >

Value	Shutdown Factor	Remarks (Operation)
0	Normal	
1	Failure of communication to Module microcomputer	MODULE (immediately Shutdown)
2	3-wire serial communication of Main microcomputer	Go to No. 1 Subcategory Information
3	IIC communication failure of Main microcomputer and Unknown error	Go to No. 2 Subcategory Information
4	Communication failure of Main microcomputer	MAIN (immediately Power Supply OFF)
5	FAN stopped	FAN (immediately Power Supply OFF)
6	Abnormally high temperature at MTB	TEMP2 (After 30 seconds warning, turn the power supply off)
7	Failure of Digital Tuner	Go to No. 3 Subcategory Information
8	Failure of Power Supply	Go to No. 4 Subcategory Information
B	Speaker short-circuit	

< No. 1 Subcategory Information on "Failure in 3-wire serial communication of Main microcomputer" >

Value	Shutdown Factor	Remarks (Operation)
0	Non subcategory	
1	IF microcomputer communication failure	IF (immediately Power Supply OFF)
2	MANTA communication failure (MULTI)	MULTI1 (immediately Power Supply OFF)
4	MANTA communication	I/P
5	MANTA communication	D-SEL

< No. 2 Subcategory Information on "Failure in IIC communication of Main microcomputer" >

Value	Shutdown Factor	Remarks (Operation)
0	Non subcategory	
1	Analog tuner1 (Front end 1)	FE1 (immediately Power Supply OFF)
3	MPX	MPX (After 3 times reset action, turn Power Supply off (except for us))
4	AV switch	AV-SW (immediately Power Supply OFF)
5	RGB switch	RGB-SW (immediately Power Supply OFF)
8	Main VDEC	M-VDEC (immediately Power Supply OFF)
9	Sub VDEC	S-VDEC (immediately Power Supply OFF)
A	AD/PLL	ADC (immediately Power Supply OFF)
B	HDMI	HDMI (immediately Power Supply OFF)
E	M2 communication	TX-COM (After 3 times reset action, turn Power Supply off)
F	M2 busy	TX-BSY (After 3 times reset action, turn Power Supply off)
G	64k EEPROM	MA-EEP (immediately Power Supply OFF)
H	AUDIO IC	

< No. 3 Subcategory Information on "Digital tuner" >

Value	Shutdown Factor	Remarks (Operation)
0	Non subcategory	
1	DTV starting failure	PS/RST (The history is left, and intercepts it the communication)
2	DTV communication failure	RETRY (The history is left, and intercepts it the communication)

< No. 4 Subcategory Information on "POWER" >

Value	Shutdown Factor	Remarks (Operation)
1	DCDC Converter heden	M-DCDC (immediately Power Supply OFF)
2	Relay Power supply heden	RELAY (immediately Power Supply OFF)

9.3.12 DRV

Drive ON/OFF: ON/OFF control for only the large-power system

Command Format	Effective Operation Modes	Function	Remarks
[DRV+S00]	Every time	DRIVE OFF	At standby mode, when 10 seconds passed after issuing [DRV+S00], command becomes invalid.
[DRV+S01]	Every time	DRIVE ON	

9.3.13 OTHER COMMANDS

• SETTING FOR FACTORY MODE PERMISSION / PROHIBITION o o o [FAY / FAN]

The commands FAY/FAN are for prohibiting/permitting panel-adjustment commands.

Command Format	Operation		Remarks
	Effective Operation Modes	Control	
[FAY]	Normal operation mode while the power is on	Adjust command is valid.	Mask indications will be forcibly turned off.
[FAN]	During FAY	Adjust command is invalid.	

• BACKUP FUNCTION FOR ADJUSTMENT VALUE FOR THE MAIN UNIT o o o [FAJ / UAJ / CBU / BCP]

When the DIGITAL Assy is to be replaced, adjustment values can be copied from the backup EEPROM to the EEPROM of the Assy for service.

Command Format	Operation			Remarks
	Effective Operation Modes	Control		
[FAJ]	During FAY	To make the flag setting that indicating that adjustment of the panel unit has been completed	Writing 00 to the 4 k byte ROM and copying to the 2 k byte ROM	This takes at least 350 ms.
[UAJ]		To make the flag setting that indicating that adjustment of the main unit has not been completed	Writing F0 to the 4 k byte ROM	
[CBU]		To make the flag setting that indicating that backup data have not been copied	Writing F0 to the 2 k byte ROM	The backup ROM is initialized.
[BCP]		To copy Digital backup data to EEPROM	Copying backup data	

10. GENERAL INFORMATION
10.1 POWER ON SEQUENCE

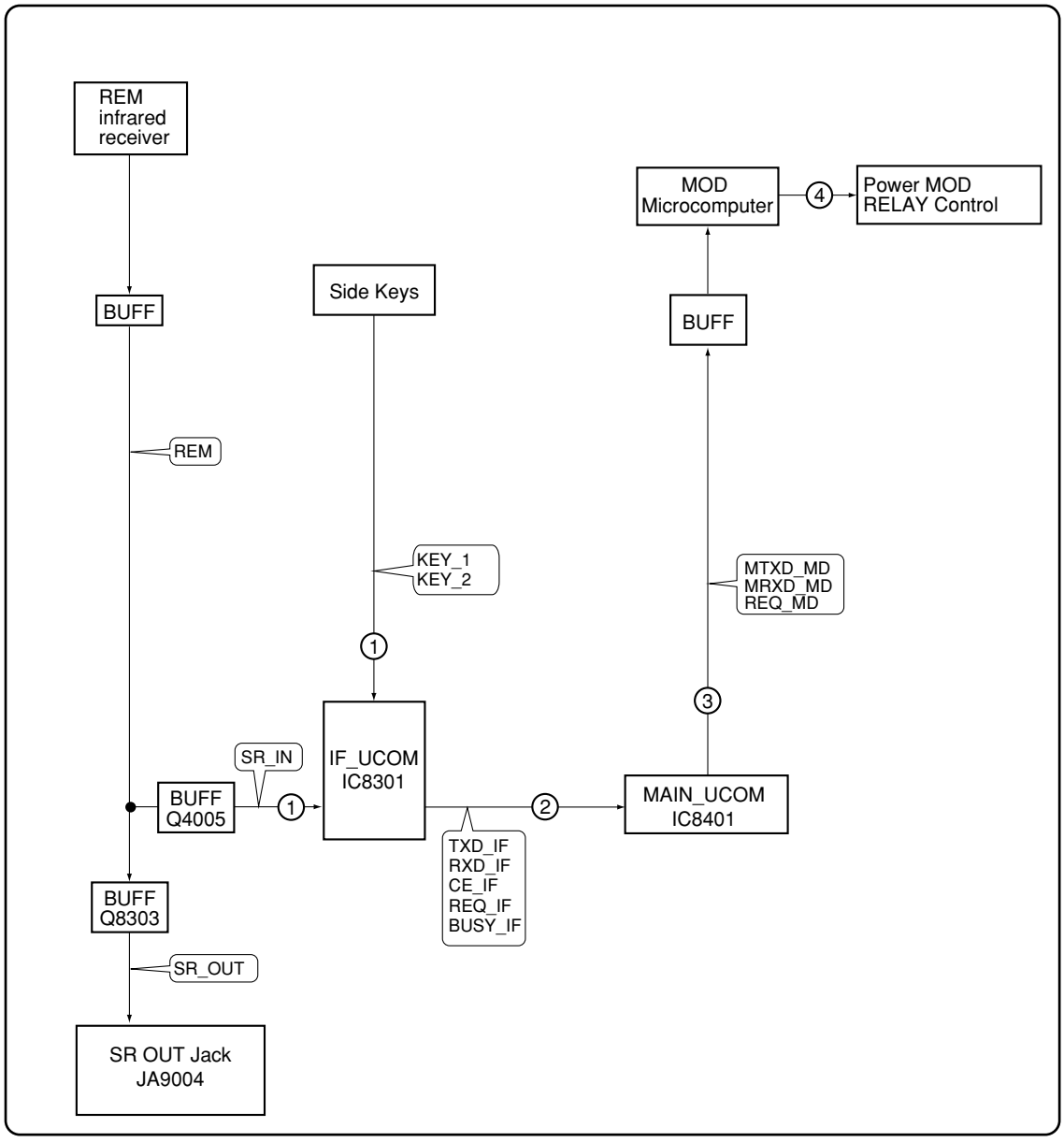

① : The remote control (or KEY) signal is input to the IF microcomputer.
② : The IF microcomputer sends the operation data to the main microcomputer.
③ : The main microcomputer issues a startup command to the MOD microcomputer.
④ : The MOD microcomputer controls the relay of the power MOD of the PDP to startup the power of the PDP.

A

B

C

D

E

F

Power supply status - ON

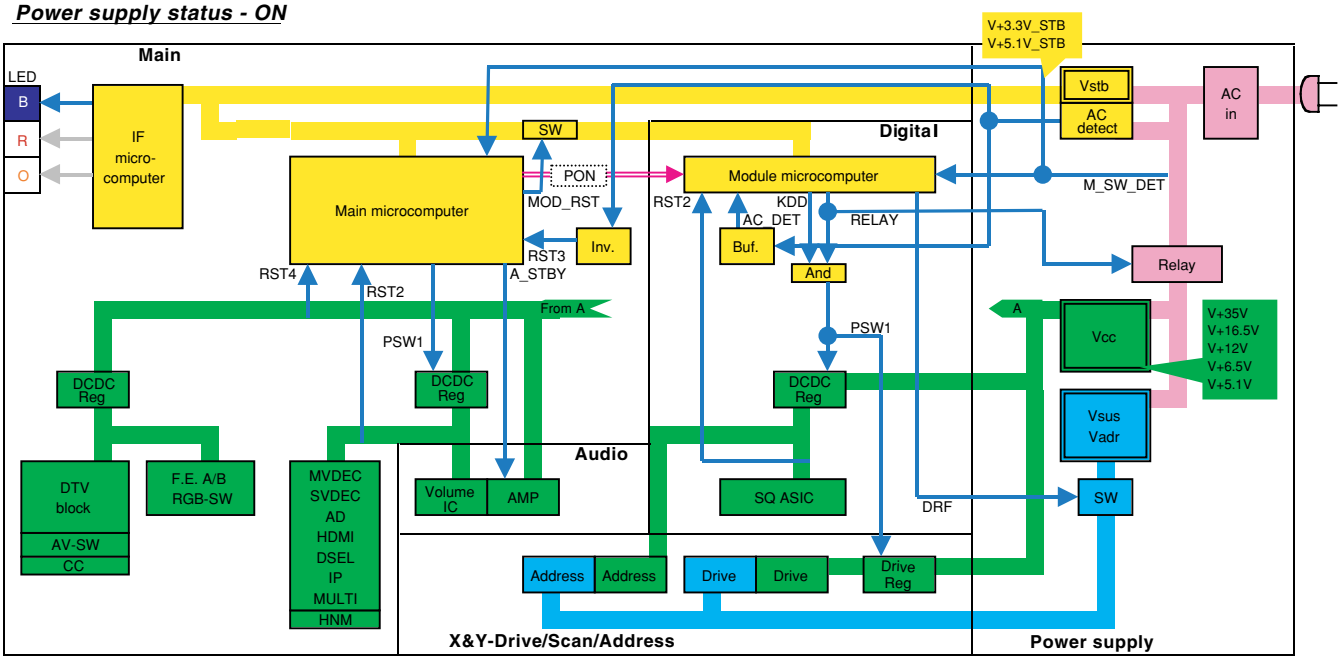

Power supply status - Standby

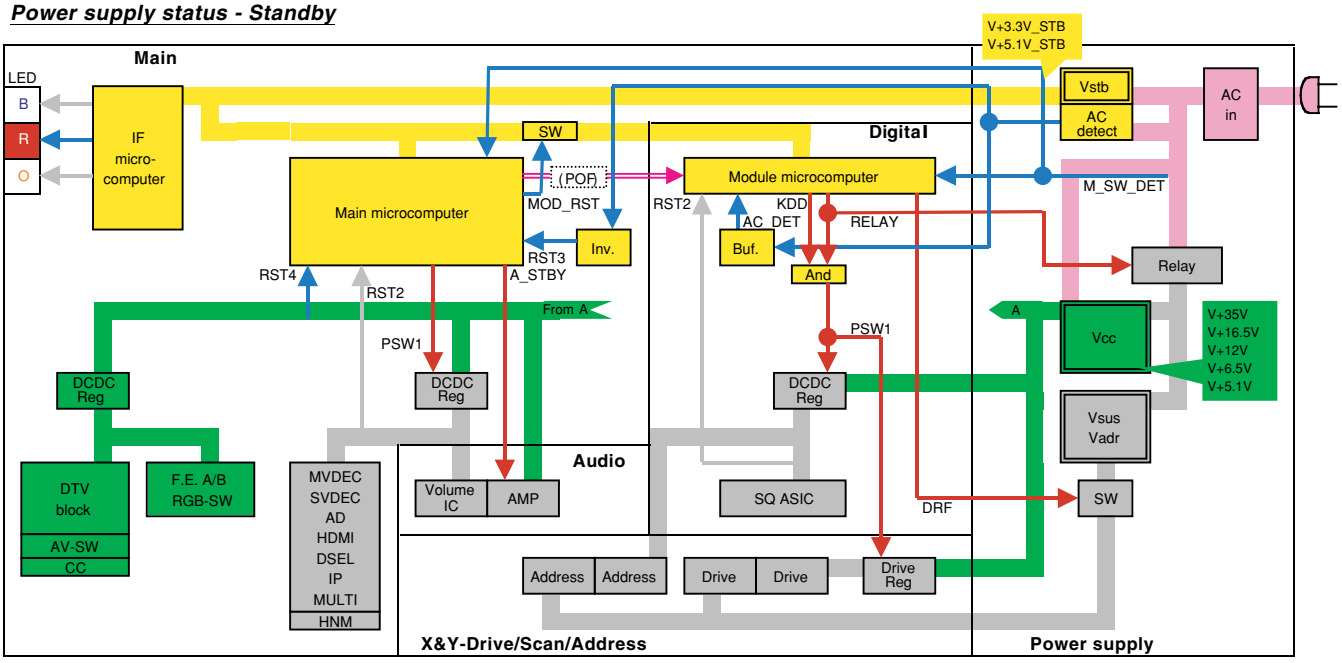

Power supply status - POWER button off

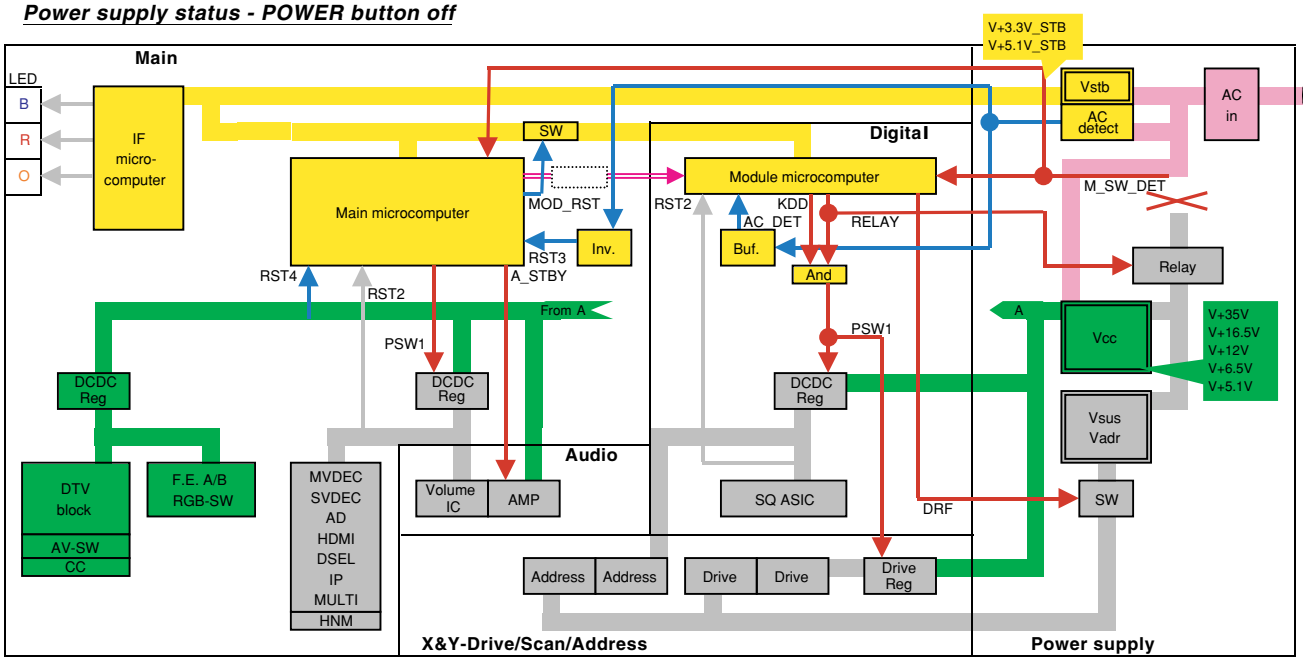

This state of the power supply is the same as the Standby mode.
However, all LED is turned off, and the operation by the user is not effective.

Power supply status - AC off

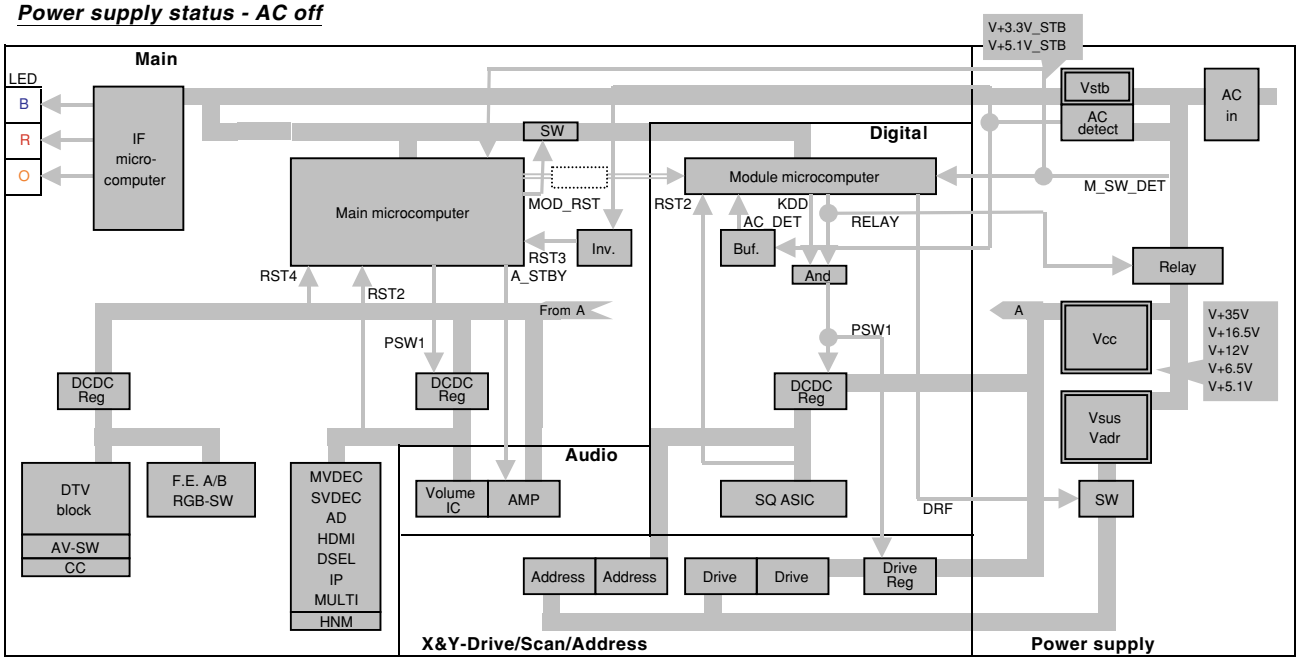

10.2 POWER SUPPLY TRANSITION STATUS

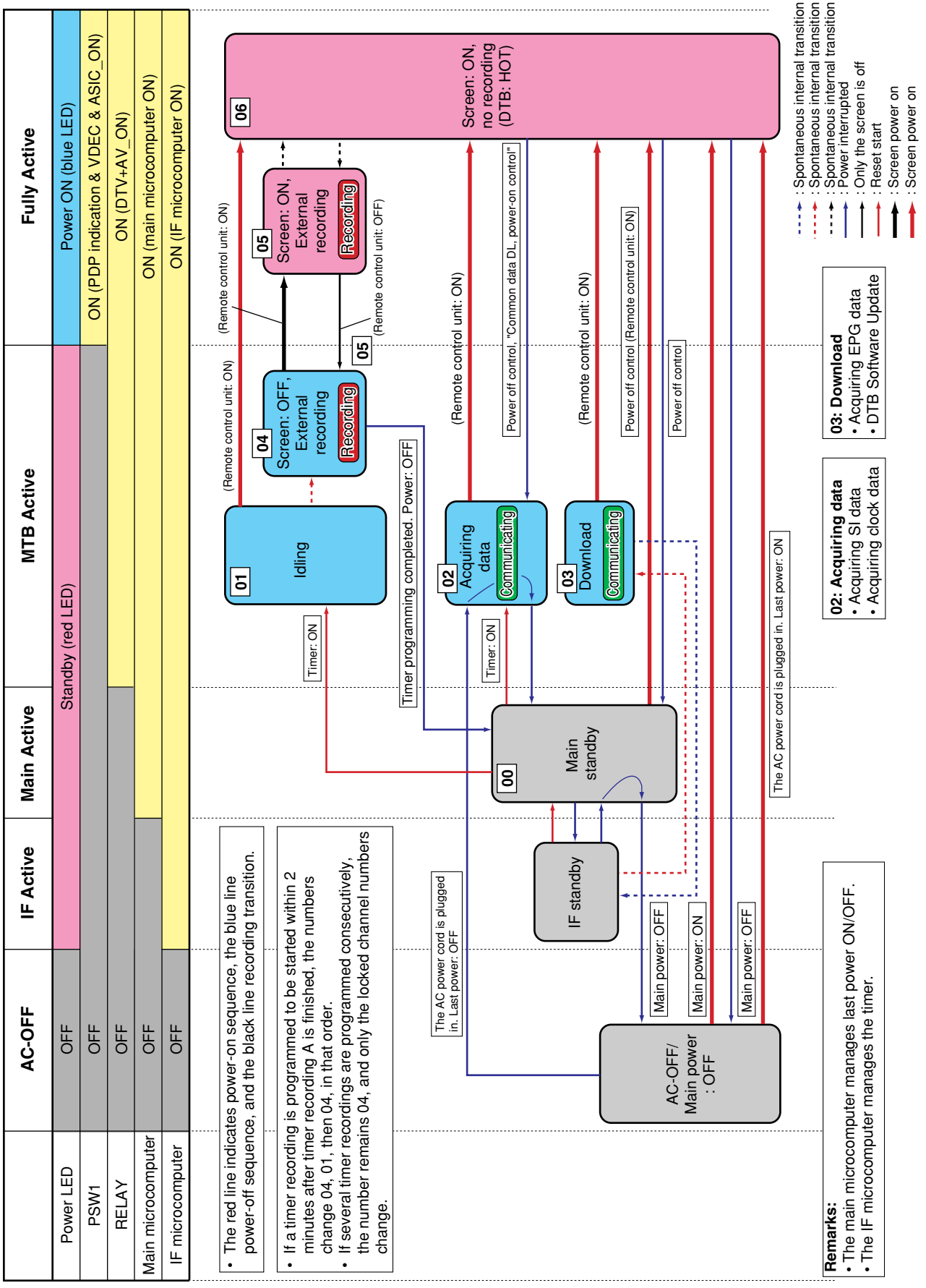

10.3 POWER ON/OFF FUNCTION FOR THE LARGE-SIGNAL SYSTEM

Function:
It is an operational mode where the digital signal processing performs circuit operation but the power is not supplied to the panel driving system (large signal system) in order to avoid a power down.

Application:
1. When it is necessary to check whether the signal output is correctly reaching the drive system in a repairing activity etc.
2. In the case of a PD, to determine whether the problem is with the large signal system power supply or with the small signal system power supply.

Method:
1. Make shorting between the specified location (refer to the illustration below) of the PCB surface of the DIGITAL ASSY and the nearby pattern.
2. Execute [DRV S00] by RS232C command. ([DRV S01] for release)

Supplemental explanation:
- When the large signal system power supply is in OFF state, there will be no PD, except PS_PD, as the PD signal has been muted.
- If the clip is removed in the OFF state of the large signal system power supply, PD will take place at the instance of clip removal. Therefore, be sure to remove the clip after turning the power OFF.
- Under RS-232C command control, [DRVS01] (release) is possible during power ON. However, there is a possibility of damaging the set. Therefore, make this operation only after turning the power OFF.
- Command [DRVS00/S01] is effective even during standby. When the main power is turned OFF, however, [DRVS01] (release) will be effective.

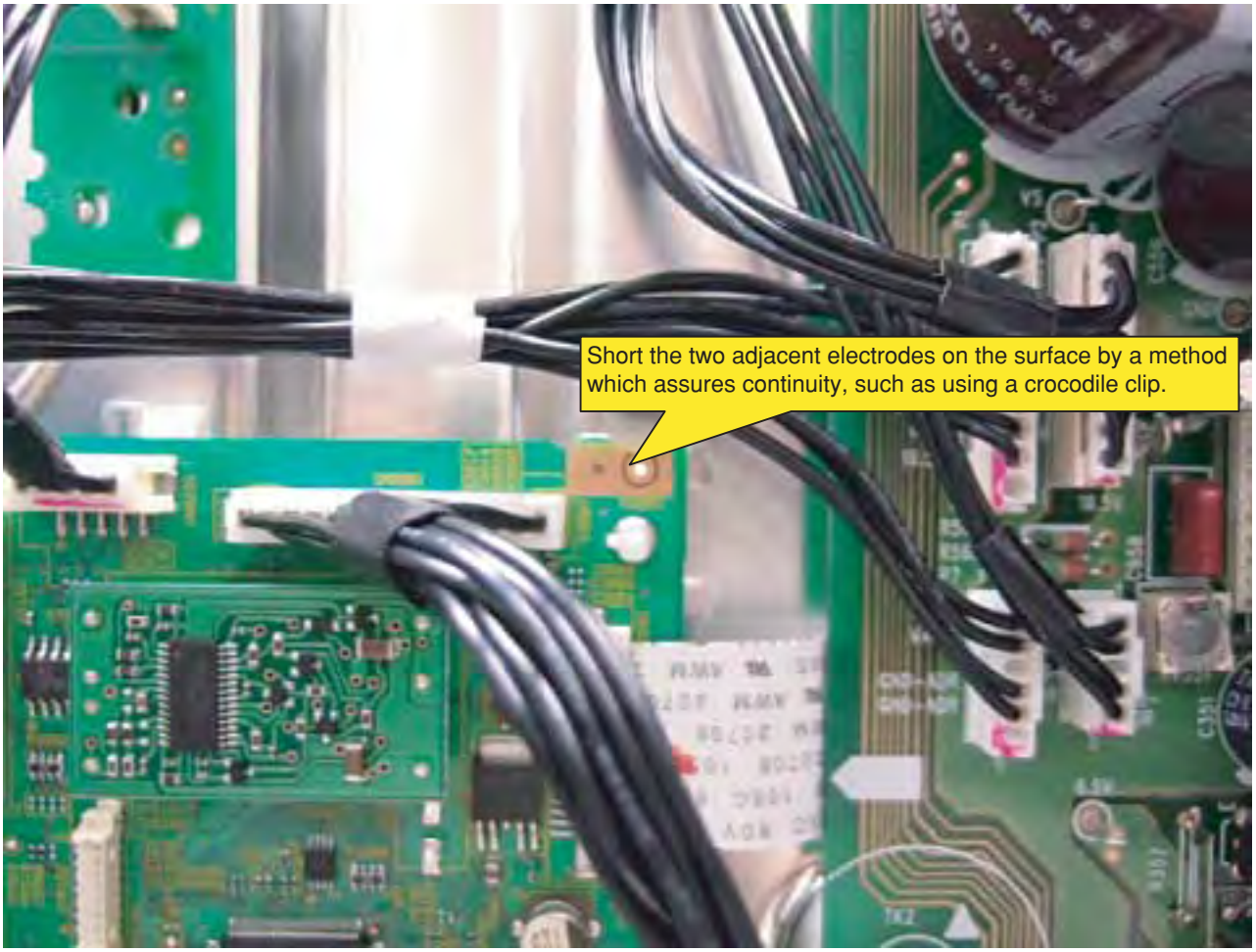

10.4 LED INFORMATION

■ LED Pattern

State	LED Pattern	
AC OFF or Main power switch OFF	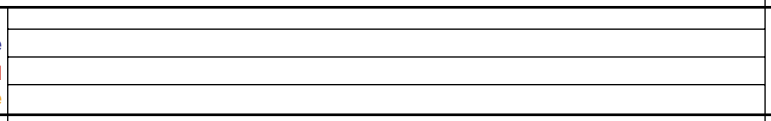	
Standby power management		
Power ON	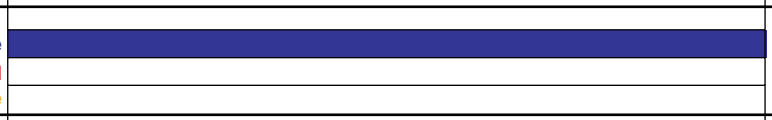	
Power-down	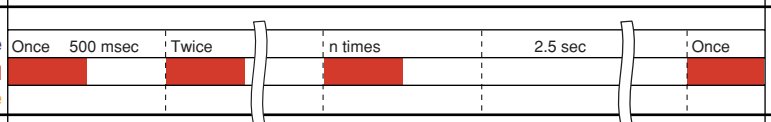	
Shutdown	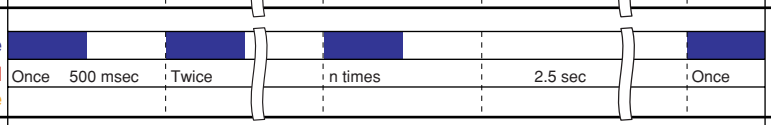	
No digital adjustment data copied for backup	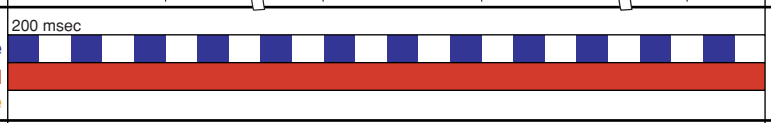	
In the process of rewriting the program of the microcomputer	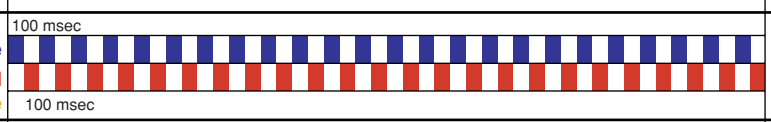	
During reservation video recordings (Unit: Standby)	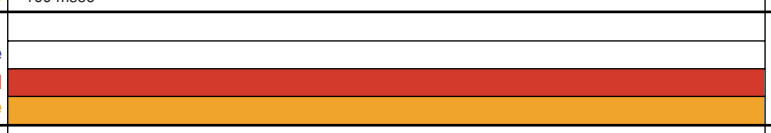	PDP-4270XD and PDP-427XD only
During factory operation During reservation video recordings (Unit: ON) ∗1 During sleep timer operation (∗2)		
RS-232C <=> SR+ switch	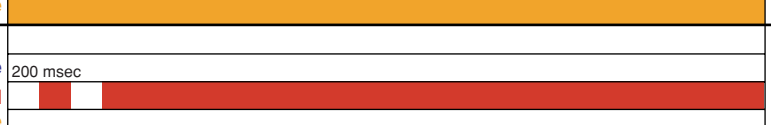	

∗1: PDP-4270XD and PDP-427XD types
∗2: PDP-4270XA and PDP-427XA types

10.5 SPECIFICATION ABOUT THE THERMAL PROTECTION

∗ The change of HI / LO have hysterisis curve below.

■ Reading Value of the Sensor and FAN Drive

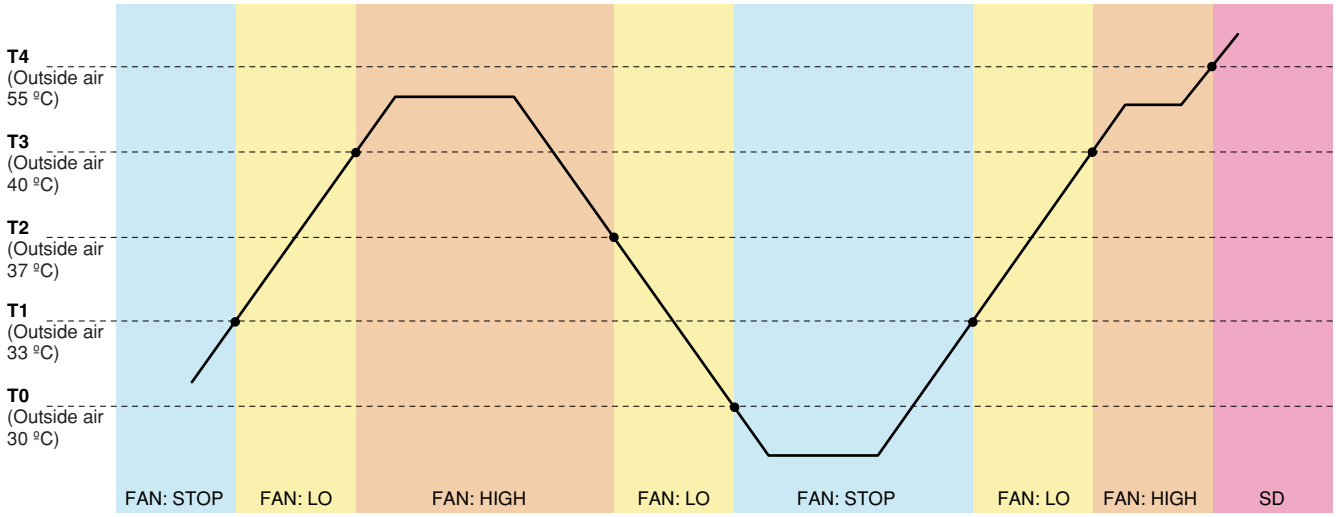

Assign			AD Value 10 bit	Aims (Sensor Position)	Aims (Outside Air)
Pin 76	TEMP2	T4 setting	440	55 ºC	55 ºC
		T3 setting	568	40 ºC	40 ºC
		T2 setting	592	37 ºC	37 ºC
		T1 setting	627	33 ºC	33 ºC
		T0 setting	653	30 ºC	30 ºC

Assign	FAN: HIGH	FAN: LO	STOP
Pin 149 (FAN_CONT)	H	H	L
Pin 17 (FAN_CONT_POW)	H	L	–

■ Unit State and Fan Drive

POWER	PSW1	State	Control	FAN Operation
ON	ON	ON	According to the reading value of above table sensor.	HIGH or LO
ON	ON	DT_REC	According to the reading value of above table sensor.	HIGH or LO
OFF	–	STB	FAN_CONT: "L"	OFF

[System block diagram]

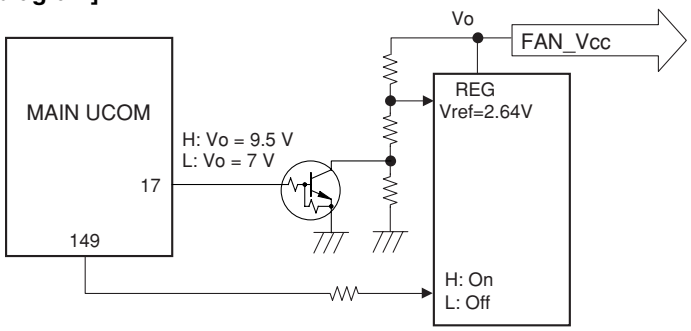

■ Operation when executing FAN control command

When executing [FCNS00], [FCNS01], [FCNS02] command, detect the FAN_NG signal. When NG is detected, it becomes shutdown.
When [FCNS03] command is executed, FAN_NG detection is not operated.

10.6 PROCESSING IN ABNORMALITY

Speaker short-circuit

● **Circuit diagram**

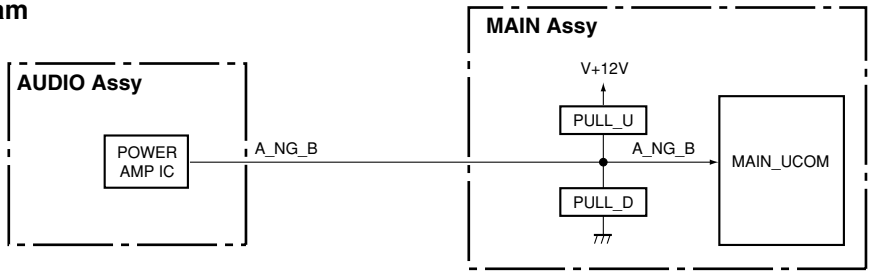

● **Specifications for port monitoring**

Port Name	SD/PD Indication	Assigned Pin	Active
A_NG_B	AUDIO		Shutdown with L

Power supply and DC-DC converter

● **Circuit diagram**

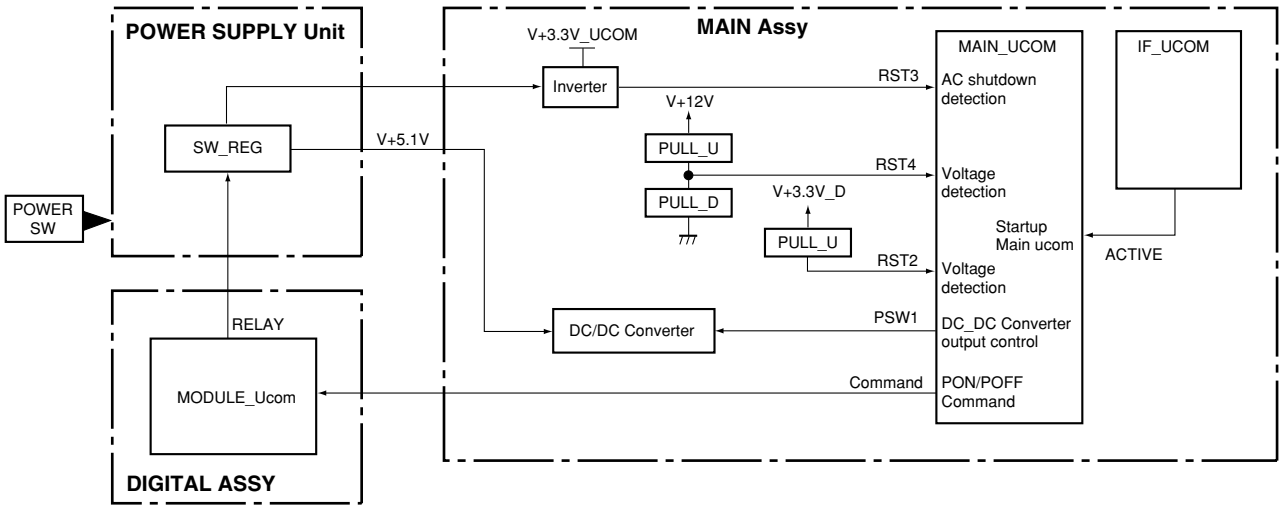

● **Specifications for port monitoring**

Port Name	SD/PD Indication	Assigned Pin	Active
RST2	ASIC power		Shutdown with L
RST3	AC power		AC_OFF with H
RST4	MAIN power		Shutdown with L

Fan and temperature sensor

● **Circuit diagram**

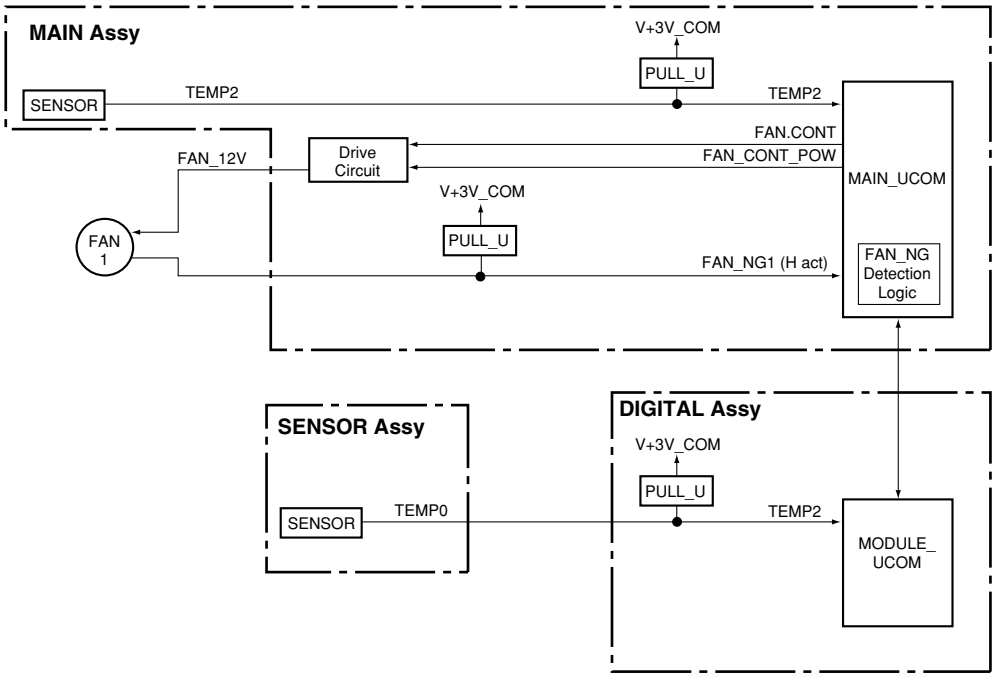

● **Specifications for port monitoring**

Port Name	SD/PD Indication	Assigned Pin	Active
FAN_NG 1	FAN		Shutdown with H
TEMP2	Abnormally high temperature in the MR		Shutdown when the value exceeds the predetermined value
TEMP0	Abnormally high temperature in the Drive circuit		Shutdown when the value exceeds the predetermined value

DTB antenna power supply

● **Circuit diagram**

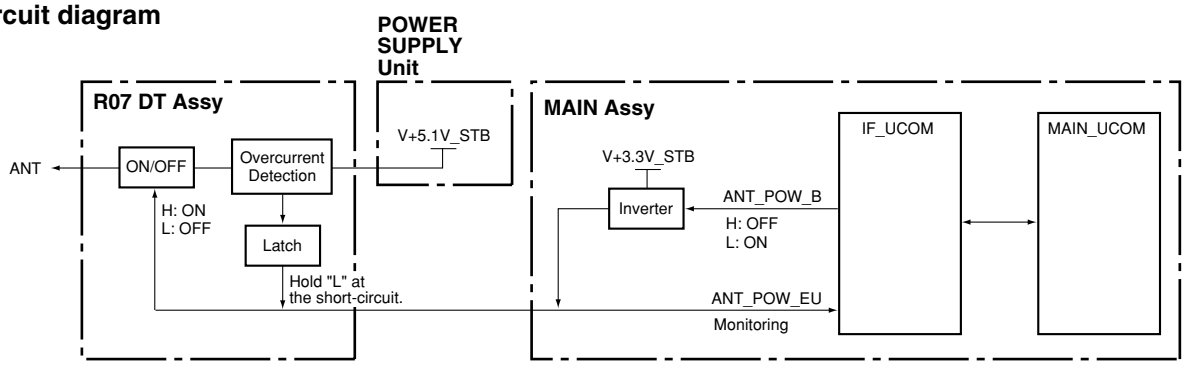

● **Specifications for port monitoring**

Port Name	SD/PD Indication	Assigned Pin	Active
ANT_POW_EU	DTB antenna short	IF_37	Warning with L

11. SPECIFICATIONS

11.1 SPECIFICATIONS

Item			42" Plasma Television, model: PDP-427XD, PDP-4270XD, PDP-427XA, PDP4270XA
Number of pixels			1024 x 768 pixels
Audio amplifier			13 W + 13 W (1 kHz, 10 %, 8 Ω)
Speakers			Woofer: 4.8 cm x 13 cm cone type
			Tweeter: 2.5 cm semidome type
Surround System			SRS/FOCUS/TruBass
Power Requirements			220 V to 240 V AC, 50 Hz/60 Hz, 291 W (0,7 W Standby) : PDP-427XD, Only
			220 V to 240 V AC, 50 Hz/60 Hz, 287 W (0,3 W Standby) : PDP-427XA, Only
Dimensions			1040 mm (W) x 679 mm (H) x 115 mm (D)
Weight			32.1 kg (70.8 lbs.): PDP-4270XD, 29.6 kg (65.3 lbs.): PDP-427XD
			31.5 kg (69.5 lbs.): PDP-4270XA, 29.0 kg (64.0 lbs.): PDP-427XA
Colour System		Analogue	PAL/SECAM/NTSC 3.58/NTSC 4.43/PAL 60
		Digital	PAL/SECAM
TV Function	Receiving System		B/G, D/K, I, L/L'
(Analogue)	Tuner	VHF/UHF	E2-E69 ch, F2-F10 ch, I21-I69 ch, IR A-IR J ch
		CATV	Hyper-band, S1-S41 ch
	Auto Channel Preset		99 ch, Auto Preset, Auto Label, Auto Sort
	STEREO		NICAM/A2
TV Function	Receiving System		DVB-T (2 K / 8 K COFDM)
(Digital)	Tuner	VHF/UHF	VHF Band III (170 MHz to 230 MHz) and UHF Band IV, V (470 MHz to 862 MHz)
	Auto Channel Preset		999 ch, Auto Preset, Auto Label, Auto Sort
	STEREO		MPEG layer I/II, Dolby Digital
Terminals	Rear	INPUT 1	SCART (AV in, RGB in, TV out)
		INPUT 2	SCART (AV in/out, S-VIDEO in, AV link *1), Component Video in
		INPUT 3	SCART (AV in/out, S-VIDEO in, RGB in, AV link *1), HDMI in *2
		INPUT 4	HDMI in *2 (PDP-427XD, PDP-427XA only)
		CONTROL OUT	1 (PDP-427XD, PDP-427XA only)
		Antenna	75 Ω Din Type for VHF/UHF in (Analogue)
			75 Ω Din Type for VHF/UHF in (Digital)
			75 Ω Din Type for VHF/UHF out (Digital)
		PC	Analogue RGB in PC INPUT (AUDIO) (PDP-427XD, PDP-427XA only)
	Side	INPUT 4	S-VIDEO, AV in (PDP-4270XD, PDP-4270XA only)
	Side	INPUT 5	S-VIDEO, AV in (PDP-427XD, PDP-427XA only)
AUDIO OUTPUT terminal		(Rear)	AUDIO out (Fixed)
SUB WOOFER OUTPUT terminal		(Rear)	Variable (PDP-427XD, PDP-427XA only)
PHONES OUTPUT terminal		(Side)	16 Ω to 32 Ω recommended
DIGITAL OUT terminal		(Rear)	Digital audio output (Optical)
COMMON INTERFACE		(Rear)	CA module

*1 Switchable from menu.

*2 This conforms to HDMI1.1 and HDCP1.1. HDMI (High Definition Multimedia Interface) is a digital interface that handles both video and audio using a single cable. HDCP (High-bandwidth Digital Content Protection) is a technology used to protect copyrighted digital contents that use the Digital Visual Interface (DVI).

Design and specifications are subject to change without notice.

Trademarks

- FOCUS, WOW, SRS and ●® symbol are trademarks of SRS Labs, Inc.
- F OCUS and SRS technologies are incorporated under license from SRS Labs, Inc.
- This product includes FontAvenue®fonts licensed by NEC Corporation. FontAvenue is a registered trademark of NEC Corporation.
- HDMI, the HDMI logo and High-Definition Multimedia Interface are trademarks or registered trademarks of HDMI Licensing LLC.
- Manufactured under license from Dolby Laboratories. "Dolby" and the double-D symbol are trademarks of Dolby Laboratories.
- The names of companies or institutions are trademarks or registered trademarks of the respective companies or institutions.

11.2 ACCESSORIES

Power cord (2 m)
(ADG1214)

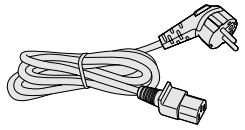

(For Europe, except UK and Eire)

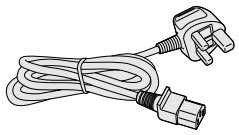

(For UK and Eire)

Only the power cord that is appropriate in your country or region is supplied.

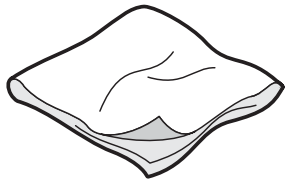

Cleaning cloth
(AED1285)

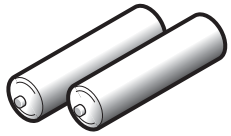

AA size battery x 2
(VEM1031)

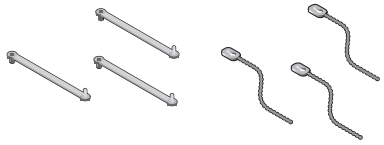

Speed clamp x 3 Bead band x 3

Binder Assy (AEC1908)

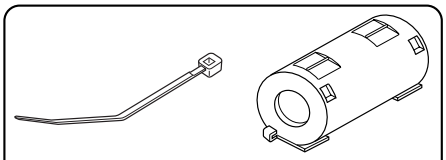

Cable tie Ferrite core

Ferrite core (ATX1039)

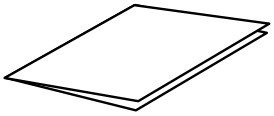

Warranty card

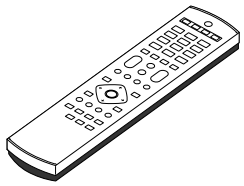

Remote control unit
(AXD1515: PDP-4270XD/WYVIXK5)
(AXD1532: PDP-427XD/WYVIXK5)
(AXD1541: PDP-4270XA/WYVIXK5, WYV5)
(AXD1540: PDP-427XA/WYVIXK5, WYV5)

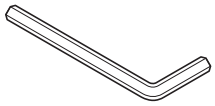

Hexagonal wrench
(Diagonal size : 6 mm)
(AEF1029)

PDP-4270XD and PDP-4270XA only

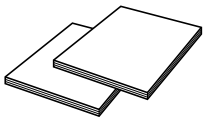

Two operating instructions PDP-4270XA One operating instructions Only.

11.3 PANEL FACILITIES

11.3.1 PDP-427XD, PDP-4270XD

• **Front/side view**

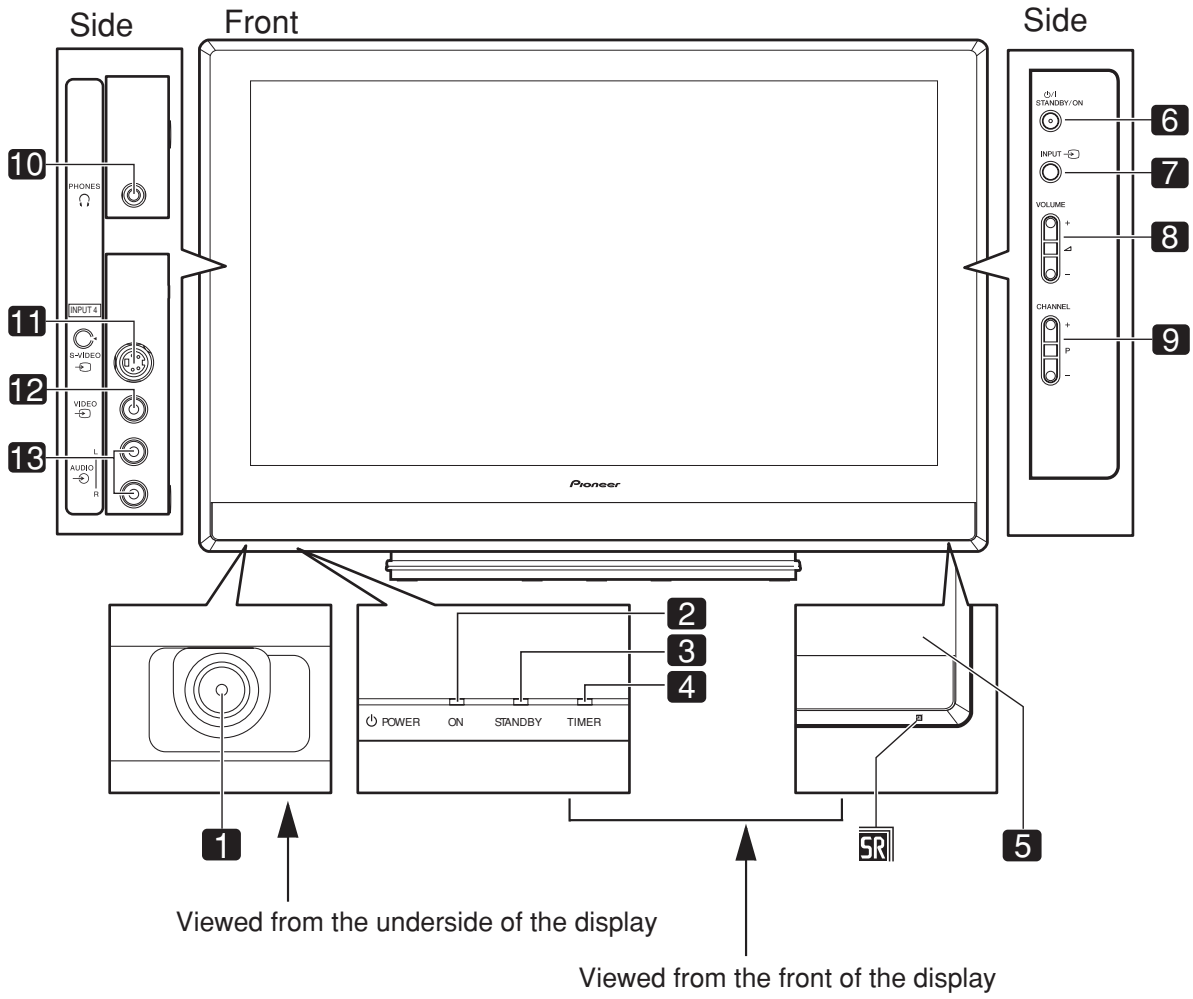

• For PDP-4270XD

1 **POWER** button
2 POWER ON indicator
3 STANDBY indicator
4 TIMER indicator
5 Remote control sensor
6 **STANDBY/ON** button
7 **INPUT** button
8 **VOLUME +/–** buttons
9 **CHANNEL +/–** buttons
10 PHONES output terminal
11 INPUT 4 terminal (S-VIDEO)
12 INPUT 4 terminal (VIDEO)
13 INPUT 4 terminal (AUDIO)

• For PDP-427XD

1 **POWER** button
2 POWER ON indicator
3 STANDBY indicator
4 TIMER indicator
5 Remote control sensor
6 **STANDBY/ON** button
7 **INPUT** button
8 **VOLUME +/–** buttons
9 **CHANNEL +/–** buttons
10 PHONES output terminal
11 INPUT 5 terminal (S-VIDEO)
12 INPUT 5 terminal (VIDEO)
13 INPUT 5 terminal (AUDIO)

• Rear view (PDP-4270XD)

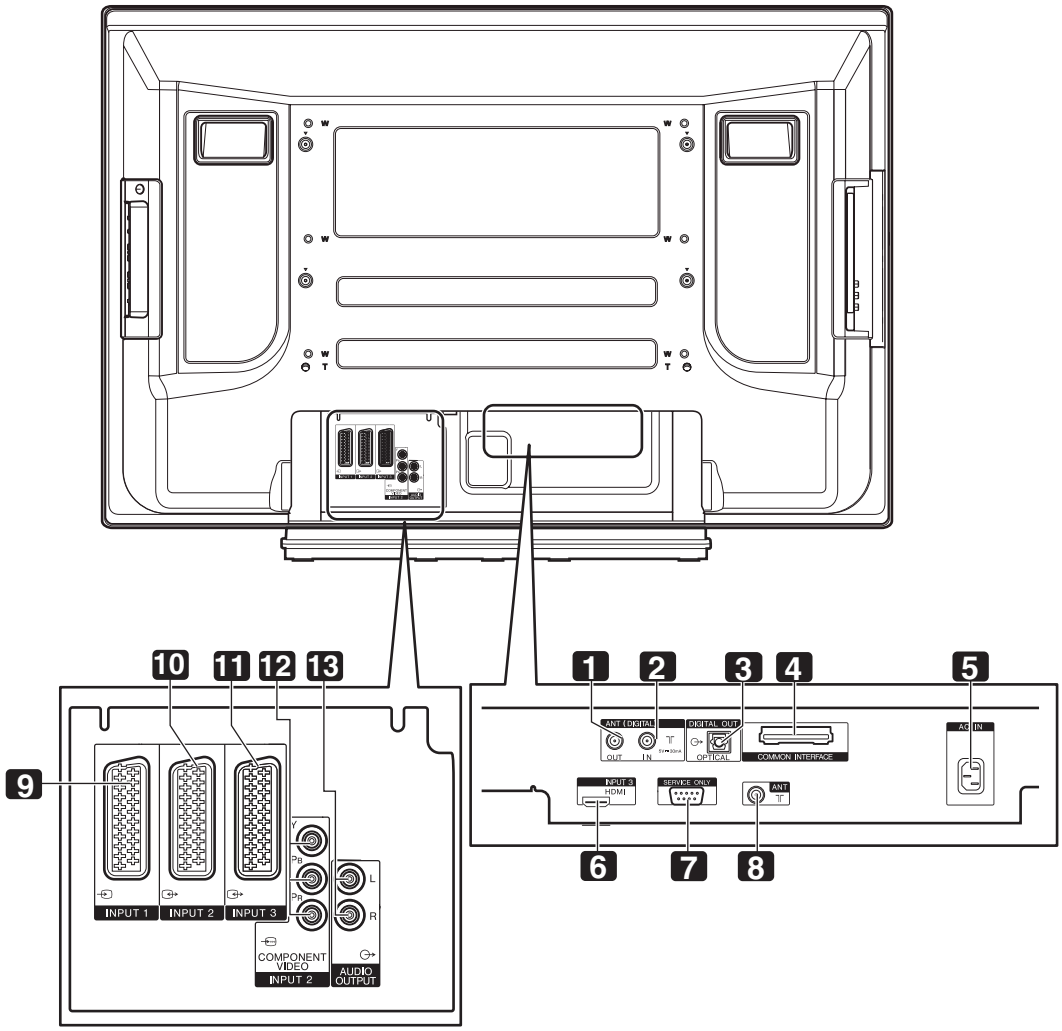

1 ANT OUT terminal (Antenna through out)
2 ANT IN terminal (Antenna in for DTV)
Power can be supplied through thisterminal.
3 DIGITAL OUT terminal (OPTICAL)
4 COMMON INTERFACE slot
For a CA module with smart card.
5 AC IN terminal
6 INPUT 3 terminal (HDMI)
7 RS-232C terminal (used for factory setup)
8 ANT (Antenna) input terminal
9 INPUT 1 terminal (SCART)
10 INPUT 2 terminal (SCART)
11 INPUT 3 terminal (SCART)
12 INPUT 2 terminal
(COMPONENT VIDEO: Y, PB, PR)
13 AUDIO OUTPUT terminals

• Rear view (PDP-427XD)

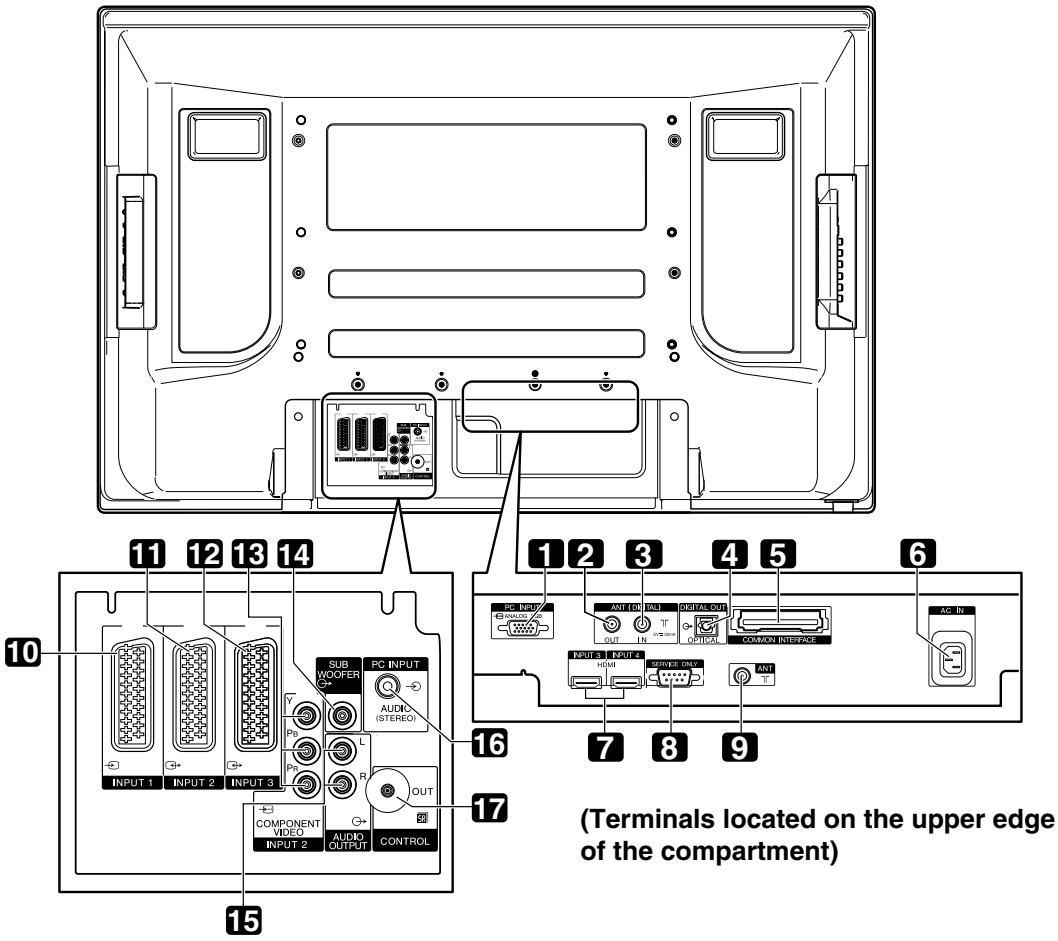

(Terminals located on the upper edge of the compartment)

1 PC INPUT terminal (ANALOG RGB)
2 ANT OUT terminal (Antenna through out)
3 ANT IN terminal (Antenna in for DTV)
Power can be supplied through thisterminal.
4 DIGITAL OUT terminal (OPTICAL)
5 COMMON INTERFACE slot
For a CA module with a smart card.
6 AC IN terminal
7 INPUT 3/INPUT 4 terminals (HDMI)
8 RS-232C termina (used for factory setup)
9 ANT (Antenna) input terminal
10 INPUT 1 terminal (SCART)
11 INPUT 2 terminal (SCART)
12 INPUT 3 terminal (SCART)
13 INPUT 2 terminal
(COMPONENT VIDEO: Y, PB, PR)
14 SUB WOOFER OUTPUT terminal
15 AUDIO OUTPUT terminals
16 PC INPUT terminal (AUDIO)
17 CONTROL OUT terminal

• Remote control unit (PDP-4270XD)

Point the remote control at the plasma television to operate.

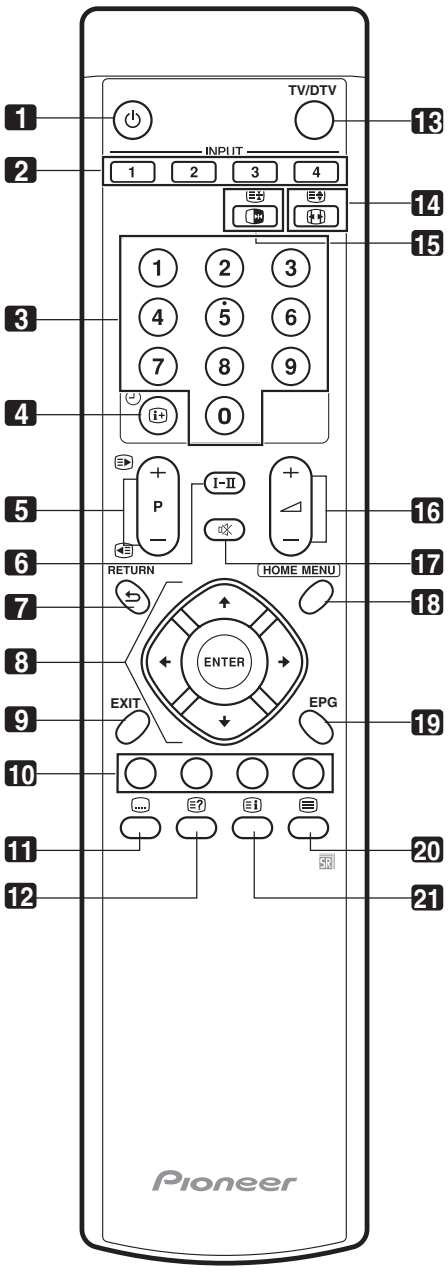

1 ⏻
Turns on the power to the plasma television or places it into the standby mode.

2 INPUT
Selects an input source of the plasma television. (INPUT 1, INPUT 2, INPUT 3, INPUT 4)

3 0 - 9
TV/External input mode: Selects a channel.
TELETEXT mode: Selects a page.

4 ⓘ+ 🕘
TV/External input mode: Displays the channel information.
DTV input mode: Displays the banner information.

5 P+/P–
TV/External input mode: Selects a channel.

/
TELETEXT mode: Selects a page.

6 I-II
Sets the sound multiplex mode.

7 ⮌ RETURN
Restores the previous menu screen.

8 ↑/↓/←/→
Selects a desired item on the setting screen.
ENTER
Executes a command.

9 EXIT
Returns to the normal screen in one step.

10 Colour (RED/GREEN/YELLOW/BLUE)
TELETEXT mode: Selects a page.

11
TV/External input mode: Jumps to the Teletext subtitle page.
DTV input mode: Turns subtitle on and off.

12
Displays hidden characters.

13 TV/DTV
Switches between the TV and DTV input modes.

14
TV/External input mode: Selects the screen size.

TELETEXT mode: Switches Teletext images. (full/upper half/lower half)

15
TV/External input mode: Freezes a frame from a moving image. Press again to cancel the function.

TELETEXT mode: Stops updating Teletext pages. Press again to release the hold mode.

16 +/–
Sets the volume.

17
Mutes the sound.

18 HOME MENU
TV/External Input mode: Displays the Menu screen.

19 EPG
Displays the Electronic Programme Guide.

20
Selects the TELETEXT mode (all TV image, all TEXT image, TV/TEXT image).

21
TELETEXT mode: Displays an Index page for the CEEFAX/FLOF format. Displays a TOP Over View page for the TOP format.

• Remote control unit (PDP-427XD)

This section describes the functions of the buttons available when the TV mode has been selected using the **SELECT** button.
For the buttons for controlling other equipment, see "Controlling other equipment using the supplied remote control unit".

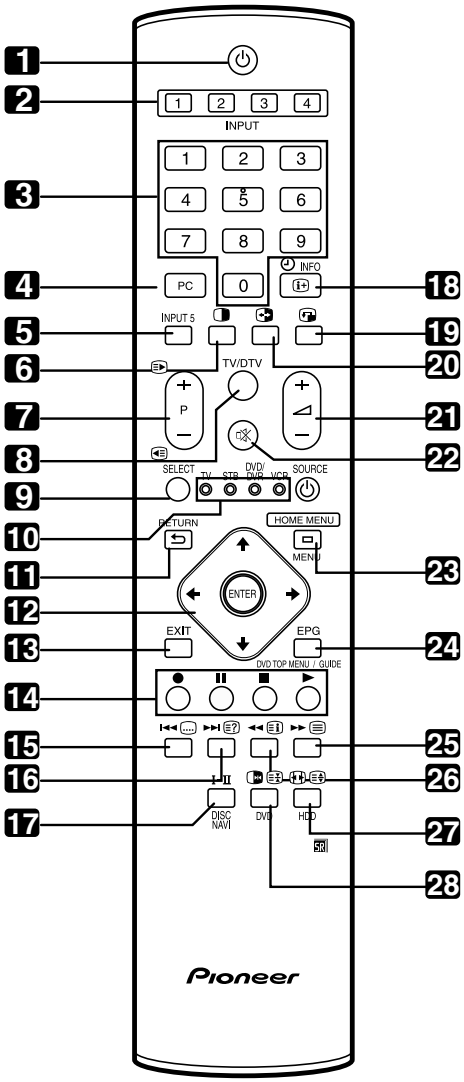

1 ⏻
Turns on the power to the Plasma Television or places it into the standby mode.

2 INPUT
Selects an input source of the Plasma Television. (INPUT 1, INPUT 2, INPUT 3, INPUT 4)

3 0 - 9
TV/External input mode: Selects a channel.
TELETEXT mode: Selects a page.

4 PC
Selects the PC terminal as an input source.

5 INPUT 5
Selects INPUT 5 as the input source of the Plasma Television.

6 ◑
Switches the screen mode among 2-screen, picture-in-picture, and single-screen.

7 P +/P –
TV/External input mode: Selects a channel.
TELETEXT mode: Selects a page.

8 TV/DTV
Switches between the TV and DTV input modes.

9 SELECT
Switches the selection among TV, STB, DVD/DVR, and VCR, so that you can control other equipment in connection, using the supplied remote control unit.

10 TV, STB, DVD/DVR, VCR
These indicators show the current selection and status when you control other equipment in connection using the supplied remote control unit.

11 ⮌ RETURN
Restores the previous menu screen.

12 ↑/↓/←/→
Selects a desired item on the setting screen.
ENTER
Executes a command.

13 EXIT
Returns to the normal screen in one step.

14 Colour (RED/GREEN/YELLOW/BLUE)
TELETEXT mode: Selects a page.

15 💬
TV/External input mode: Jumps to the Teletext subtitle page.
DTV input mode: Turns subtitle on and off.

16 🖹
TELETEXT mode: Displays hidden characters.

17 I-II
Sets the sound multiplex mode.

18 INFO
TV/External input mode: Displays the channel information.
DTV input mode: Displays the banner information.

19
Moves the location of the small screen when in the picture-in-picture mode.

20
Switches between the two screens when in the 2-screen or picture-in-picture mode.

21 +/–
Sets the volume.

22 🔇
Mutes the sound.

23 HOME MENU
TV/External Input mode: Displays the Menu screen.

24 EPG
Display the Electronic Programme Guide.

25 ☰
Selects the TELETEXT mode. (all TV image, all TEXT image, TV/TEXT image)

26
TELETEXT mode: Displays an Index page for the CEEFAX/FLOF format. Displays a TOP Over View page for the TOP format.

27
TV/External input mode: Selects the screen size.
TELETEXT mode: Switches Teletext images. (full/upper half/lower half)

28
TV/External input mode: Freezes a frame from a moving image. Press again to cancel the function.
TELETEXT mode: Stops updating Teletext pages. Press again to release the hold mode.

NOTE

• When using the remote control unit, point it at the Plasma Television.

11.3.2 PDP-427XA, PDP-4270XA

• Front / Rear (PDP-427XA)

Front view (PDP-427XA)

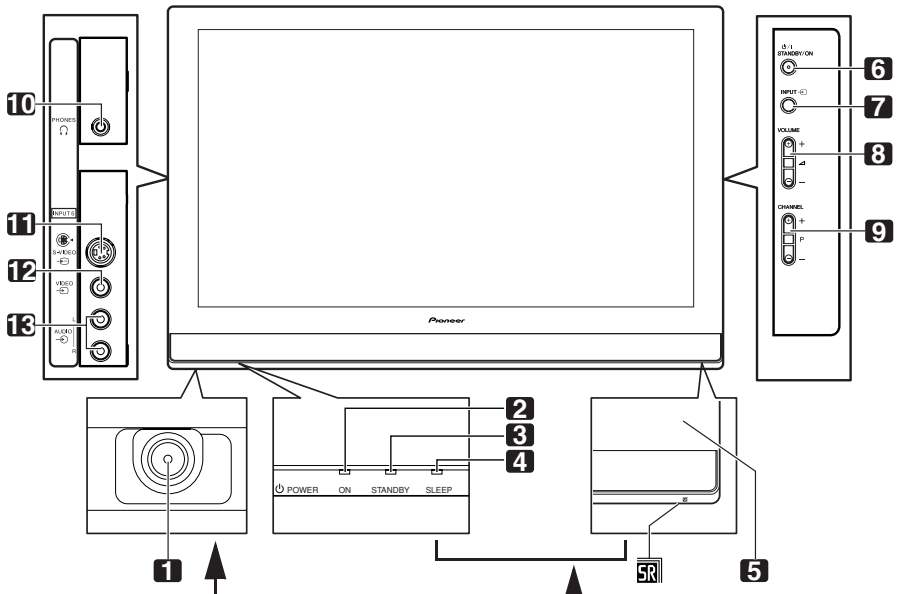

Viewed from below of the display **Viewed from the front side of the display**

1 **POWER** button
2 POWER ON indicator
3 STANDBY indicator
4 SLEEP indicator
5 Remote control sensor

(Side view)
6 **STANDBY/ON** button
7 **INPUT** button
8 **VOLUME +/-** buttons
9 **CHANNEL +/-** buttons

10 PHONES output terminal
11 INPUT 5 terminal (S-VIDEO)
12 INPUT 5 terminal (VIDEO)
13 INPUT 5 terminals (AUDIO)

Rear view (PDP-427XA)

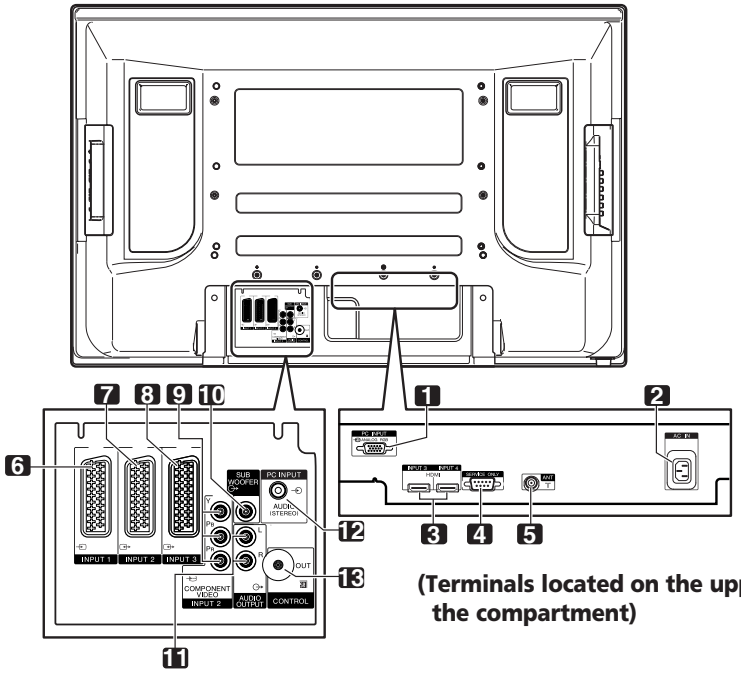

(Terminals located on the upper edge of the compartment)

1 PC INPUT terminal (ANALOG RGB)
2 AC IN terminal
3 INPUT 3/INPUT 4 terminals (HDMI)
4 RS-232C terminal (used for factory setup)
5 ANT (Antenna) input terminal
6 INPUT 1 terminal (SCART)
7 INPUT 2 terminal (SCART)
8 INPUT 3 terminal (SCART)
9 INPUT 2 terminal (COMPONENT VIDEO: Y, PB, PR)
10 SUB WOOFER OUTPUT terminal
11 AUDIO OUTPUT terminals
12 PC INPUT terminal (AUDIO)
13 CONTROL OUT terminal

• **PDP-427XA (Remote control unit)**

Remote control unit

This section describes the functions of the buttons available when the TV mode has been selected using the **SELECT** button. For the buttons for controlling other equipment, see "Controlling other equipment using the supplied remote control unit" starting .

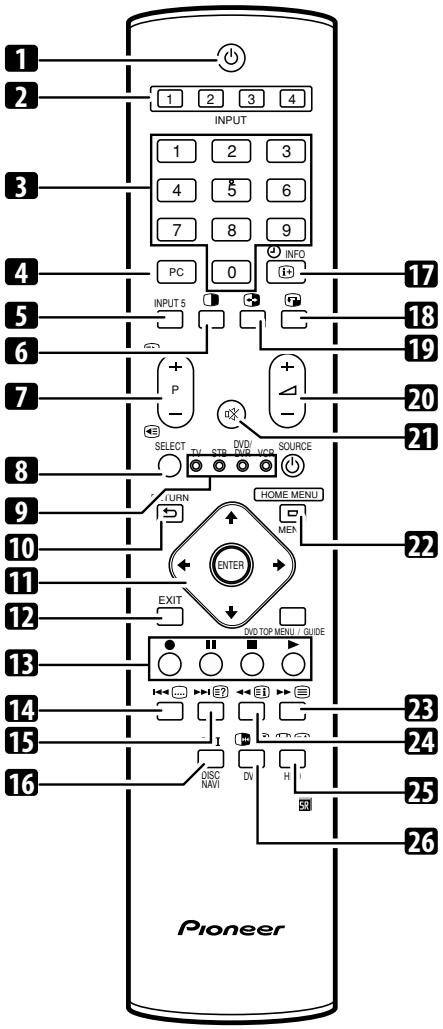

1 ⏻
Turns on the power to the Plasma Television or places it into the standby mode.

2 INPUT
Selects an input source of the Plasma Television. (INPUT 1, INPUT 2, INPUT 3, INPUT 4)

3 0 - 9
TV/External input mode: Selects a channel.
TELETEXT mode: Selects a page.

4 PC
Selects the PC terminal as an input source.

5 INPUT 5
Selects INPUT 5 as the input source of the Plasma Television.

6 ◑
Switches the screen mode among 2-screen, picture-in-picture, and single-screen.

7 P+/P–
TV/External input mode: Selects a channel.
/
TELETEXT mode: Selects a page.

8 SELECT
Switches the selection among TV, STB, DVD/DVR, and VCR, so that you can control other equipment in connection, using the supplied remote control unit.

9 TV, **STB**, **DVD/DVR**, **VCR**
These indicators show the current selection and status when you control other equipment in connection using the supplied remote control unit.

10 ⮌RETURN
Restores the previous menu screen.

11 ↑/↓/←/→
Selects a desired item on the setting screen.
ENTER
Executes a command.

12 EXIT
Returns to the normal screen in one step.

13 Colour (RED/GREEN/YELLOW/BLUE)
TELETEXT mode: Selects a page.

14
TV/External input mode: Jumps to the Teletext subtitle page.

15
TELETEXT mode: Displays hidden characters.

16 I–II
Sets the sound multiplex mode.

17 INFO
TV/External input mode: Displays the channel information.

18
Moves the location of the small screen when in the picture-in-picture mode.

19
Switches between the two screens when in the 2-screen or picture-in-picture mode.

20 +/ –
Sets the volume.

21
Mutes the sound.

22 HOME MENU
TV/External Input mode: Displays the Menu screen.

23
Selects the TELETEXT mode.
(all TV image, all TEXT image, TV/TEXT image)

24
TELETEXT mode: Displays an Index page for the CEEFAX/FLOF format. Displays a TOP Over View page for the TOP format.

25
TV/External input mode: Selects the screen size.

TELETEXT mode: Switches Teletext images. (full/upper half/lower half)

26
TV/External input mode: Freezes a frame from a moving image. Press again to cancel the function.

TELETEXT mode: Stops updating Teletext pages. Press again to release the hold mode.

NOTE

When using the remote control unit, point it at the Plasma Television.

• **Front (PDP-4270XA)**

Plasma television (front)

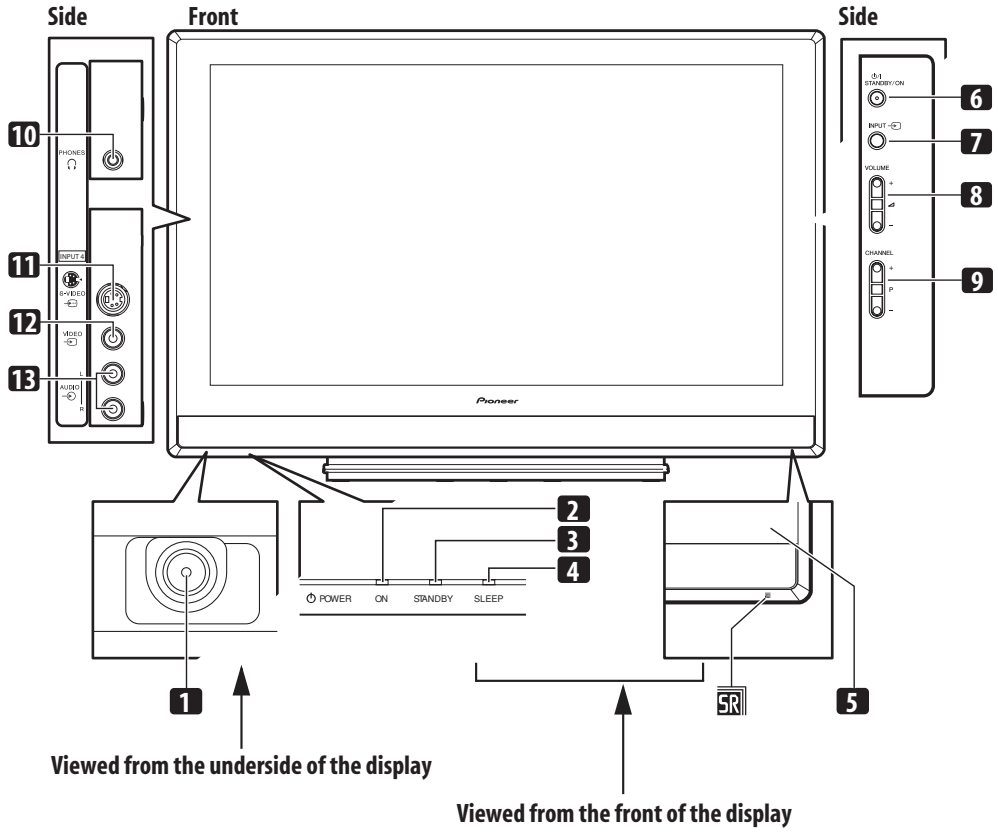

1 **POWER** button
2 POWER ON indicator
3 STANDBY indicator
4 SLEEP indicator
5 Remote control sensor
6 **STANDBY/ON** button
7 **INPUT** button
8 **VOLUME +/–** buttons
9 **CHANNEL +/–** buttons
10 PHONES output terminal
11 INPUT 4 terminal (S-VIDEO)
12 INPUT 4 terminal (VIDEO)
13 INPUT 4 terminal (AUDIO)

• **Rear view (PDP-4270XA)**

Plasma television (rear)

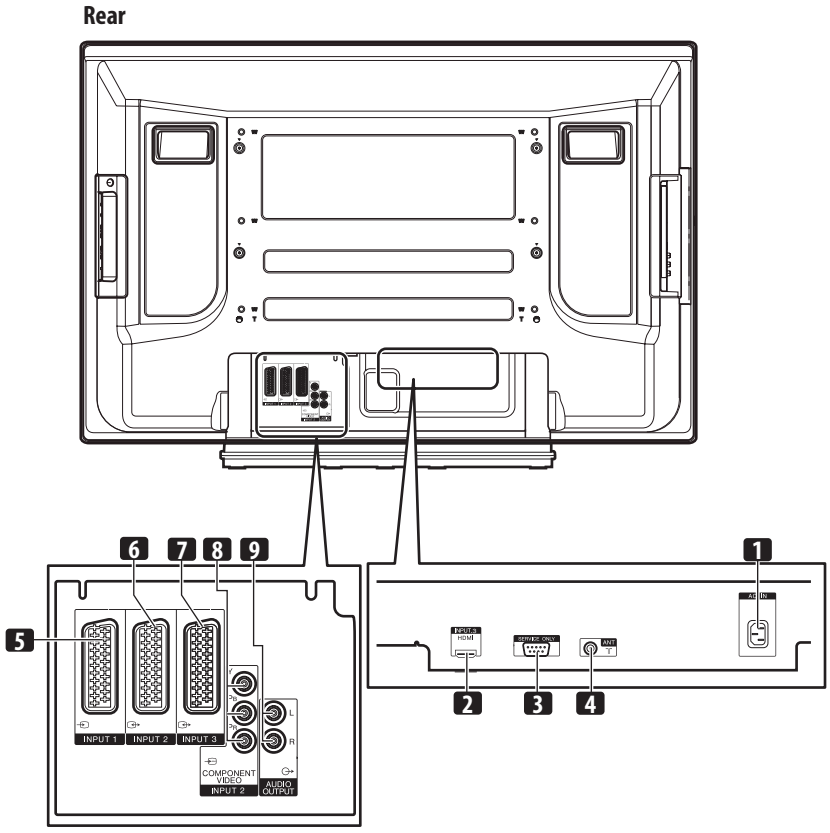

1 AC IN terminal
2 INPUT 3 terminal (HDMI)
3 RS-232C terminal (used for factory setup)
4 ANT (Antenna) input terminal
5 INPUT 1 terminal (SCART)
6 INPUT 2 terminal (SCART)
7 INPUT 3 terminal (SCART)
8 INPUT 2 terminal
(COMPONENT VIDEO: Y, P_B, P_R)
9 AUDIO OUTPUT terminals

• **Remote control unit (PDP-4270XA)**

Remote control unit

Point the remote control at the plasma television to operate.

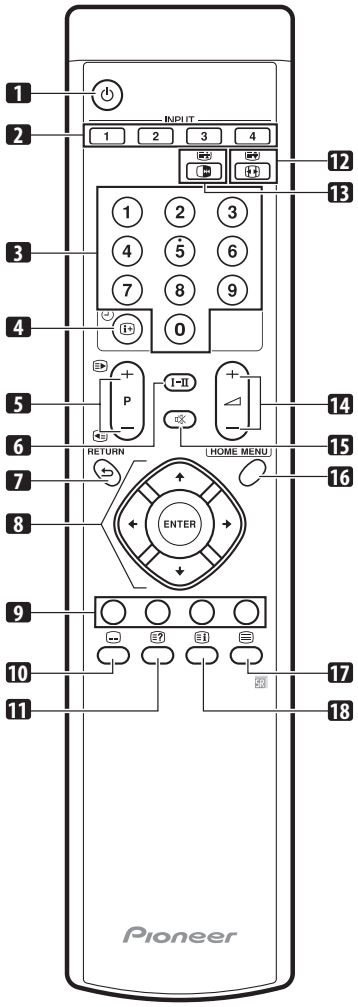

1 ⏻
Turns on the power to the plasma television or places it into the standby mode.

2 INPUT
Selects an input source of the plasma television. (INPUT 1, INPUT 2 , INPUT 3, INPUT 4)

3 0-9
TV/External input mode: Selects a channel.
TELETEXT mode: Selects a page.

4
TV/External input mode: Displays the channel information.

5 P+/P-
TV/External input mode: Selects a channel.

/
TELETEXT mode: Selects a page.

6 I-II
Sets the sound multiplex mode.

7 RETURN
Restores the previous menu screen.

8 ↑/↓/←/→
Selects a desired item on the setting screen.

ENTER
Executes a command.

9 Colour (RED/GREEN/YELLOW/BLUE)
TELETEXT mode: Selects a page.

10
TV/External input mode: Jumps to the Teletext subtitle page.

11
Displays hidden characters.

12
TV/External input mode: Selects the screen size.

TELETEXT mode: Switches Teletext images. (full/upper half/lower half)

13
TV/External input mode: Freezes a frame from a moving image. Press again to cancel the function.

TELETEXT mode: Stops updating Teletext pages. Press again to release the hold mode.

14 +/–
Sets the volume.

15
Mutes the sound.

16 HOME MENU
TV/External Input mode: Displays the Menu screen.

17
Selects the TELETEXT mode (all TV image, all TEXT image, TV/TEXT image).

18
TELETEXT mode: Displays an Index page for the CEEFAX/FLOF format. Displays a TOP Over View page for the TOP format.

12. IC INFORMATION

• The information shown in the list is basic information and may not correspond exactly to that shown in the schematic diagrams.

● **List of IC**

SN755870KPZT, PEE002A, R2S11002AFT, R2S11001FT, UPD64015AGM-UEU, AD9985KSTZ-110, SII9023CTU, LTC3414EFE, LTC3412EFE, S-1170B25UC-OTA, S-1170B15UC-OTK, NJU26901E2

■ SN755870KPZT (42 SCAN A ASSY: IC2701 to IC2706) (42 SCAN B ASSY: IC2801 to IC2806)

• Plasma Display Panel IC

● **Pin Arrangement (Top view)**

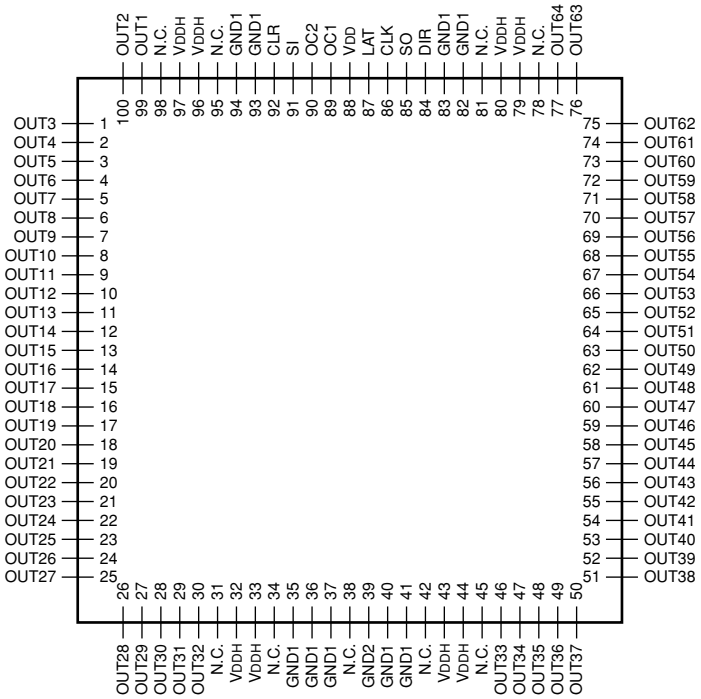

● **Block Diagram**

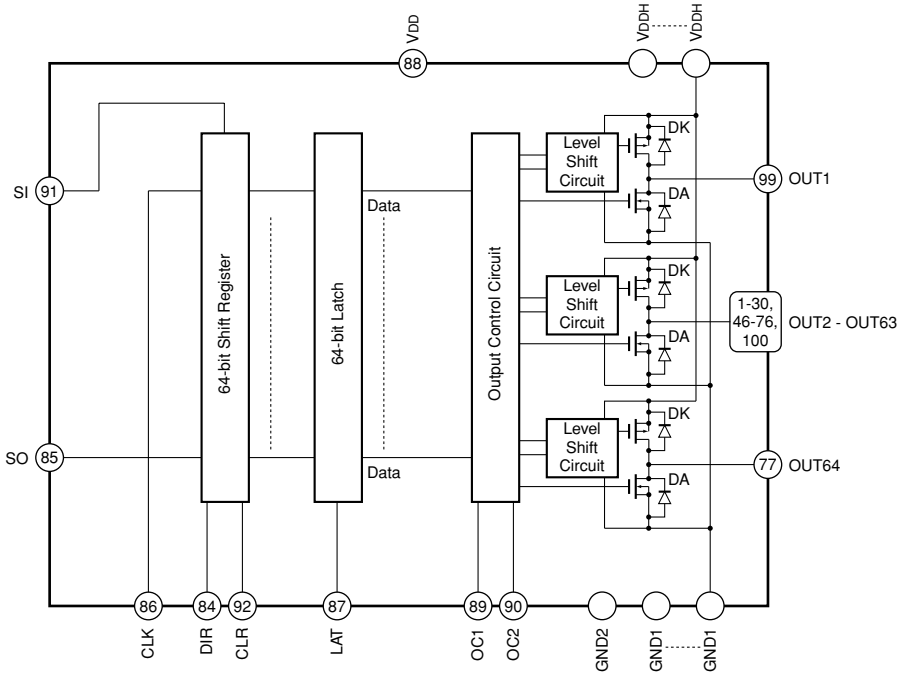

● **Pin Function**

No.	Pin Name	I/O	Pin Function
1 - 30	OUT3 - OUT32	O	High-voltage push-pull output
31	N.C.	–	Not used
32 - 33	V_{DDH}	–	Power for High-voltage circuit
34	N.C.	–	Not used
35 - 37	GND1	–	GND
38	N.C.	–	Not used
39	GND2	–	GND
40 - 41	GND1	–	GND
42	N.C.	–	Not used
43 - 44	V_{DDH}	–	Power for High-voltage circuit
45	N.C.	–	Not used
46 - 77	OUT33 - OUT64	O	High-voltage push-pull output
78	N.C.	–	Not used
79 - 80	V_{DDH}	–	Power for High-voltage circuit
81	N.C.	–	Not used
82 - 83	GND1	–	GND
84	DIR	I	Setting the shift direction of shift-register L : reverse side shift (SO→SI), H : forward side shift (SI→SO)
85	SO	I/O	Serial data In/Out
86	CLK	I	Serial clock Input Down-side edge trigger
87	LAT	I	LAT data Input L : The data of shiftregister is transferred to ouput latch. H : The ouput data of latch is holded.
88	V_{DD}	–	Power for Logic circuit
89	OC1	I	Output control Output is controlled by truth table right side.
90	OC2	I	
91	SI	I/O	Serial data In/Out
92	CLR	I	All output reset CLR terminal : L → normal operation, CLR terminal : H→ All output "H"
93 - 94	GND1	–	GND
95	N.C.	–	Not used
96 - 97	V_{DDH}	–	Power for High-voltage circuit
98	N.C.	–	Not used
99 - 100	OUT1 - OUT2	O	High-voltage push-pull output

OC1	OC2	OUT
L	L	ALL Hi-Z
L	H	DATA
H	L	ALL L
H	H	ALL H

PEE002A (42 ADDRESS ASSY: IC1501)

• LVDS Receiver

● Pin Arrangement (Top view)

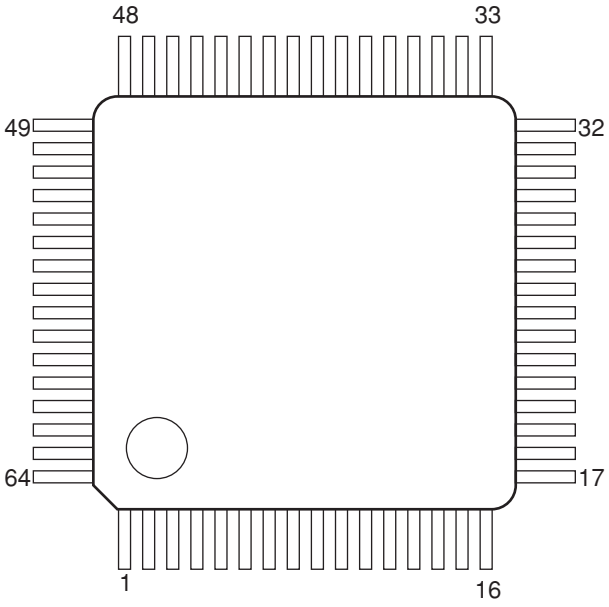

● Pin Function

No.	I/O Type	Signal
1	LRGND	
2	bb_silcdhsip_7c19a	RAMP1
3	bb_silcdhsip_7c19a	RAPP1
4	bb_silcdhsip_7c19a	RBMP1
5	bb_silcdhsip_7c19a	RBPP1
6	LRVDD	
7	bb_silcdhsip_7c19a	RCMP1
8	bb_silcdhsip_7c19a	RCPP1
9	bb_silcdhsip_7c19a	RCLKMP1
10	bb_silcdhsip_7c19a	RCLKPP1
11	bb_silcdhsip_7c19a	RDMP1
12	bb_silcdhsip_7c19a	RDPP1
13	LRGND	
14	LPGND	
15	LPVDD	
16	SIBTD	TEST0
17	SIBTD	TEST1
18	SIBTD	PHSSEL1
19	SIBTD	PHSSEL0
20	SIBTD	DIV0
21	SIBTD	DIV1
22	GND	

No.	I/O Type	Signal
23	VDD	
24	VDD	
25	SOT4L	R_E
26	SOT4L	G_E
27	SOT4L	B_E
28	GND	
29	SOT4L	ADRSV3
30	SOT4L	R_D
31	SOT4L	G_D
32	SOT4L	B_D
33	VDD	
34	SOT8FL	LE
35	GND	
36	SOT12FL	CLKOUT
37	VDD	
38	SOT4L	ADR_B
39	SOT4L	ADR_D
40	SOT4L	ADR_U1
41	SOT4L	ADR_G
42	SOT4L	LBLK
43	SOT4L	HBLK
44	GND	

No.	I/O Type	Signal
45	SOT4L	HZ
46	SOT4L	R_C
47	SOT4L	G_C
48	SOT4L	B_C
49	VDD	
50	SOT4L	ADRSV2
51	SOT4L	R_B
52	GND	
53	SOT4L	G_B
54	SOT4L	B_B
55	GND	
56	VDD	
57	SOT4L	ADRSV1
58	VDD	
59	SOT4L	R_A
60	SOT4L	G_A
61	GND	
62	SOT4L	B_A
63	SOT4L	ADRSV0
64	SISTD	OE

■ R2S11002AFT (MAIN ASSY: IC4701)

• AV SW

● Block Diagram

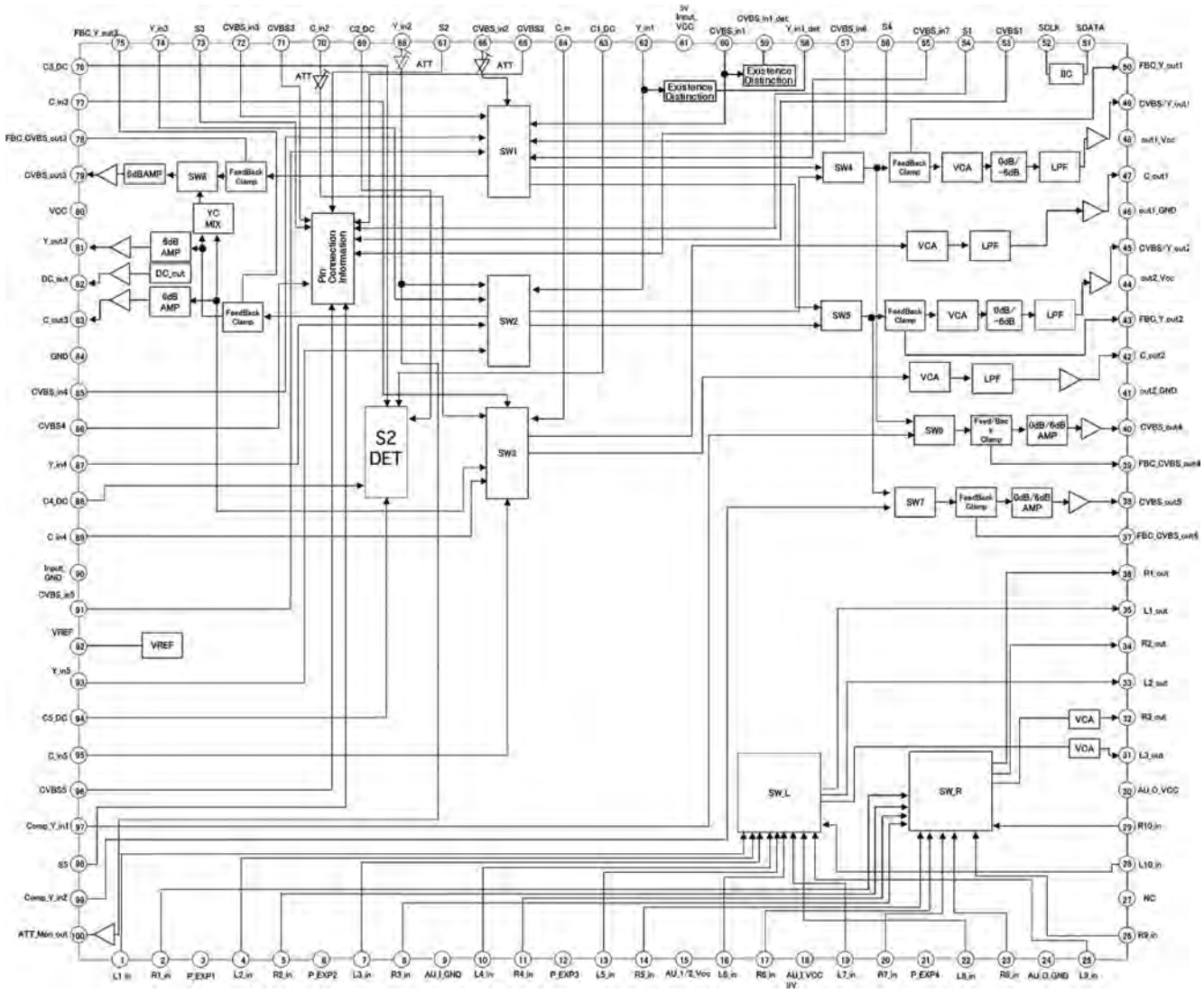

■ R2S11001FT (MAIN ASSY: IC4901)

• Component SW IC

● Block Diagram

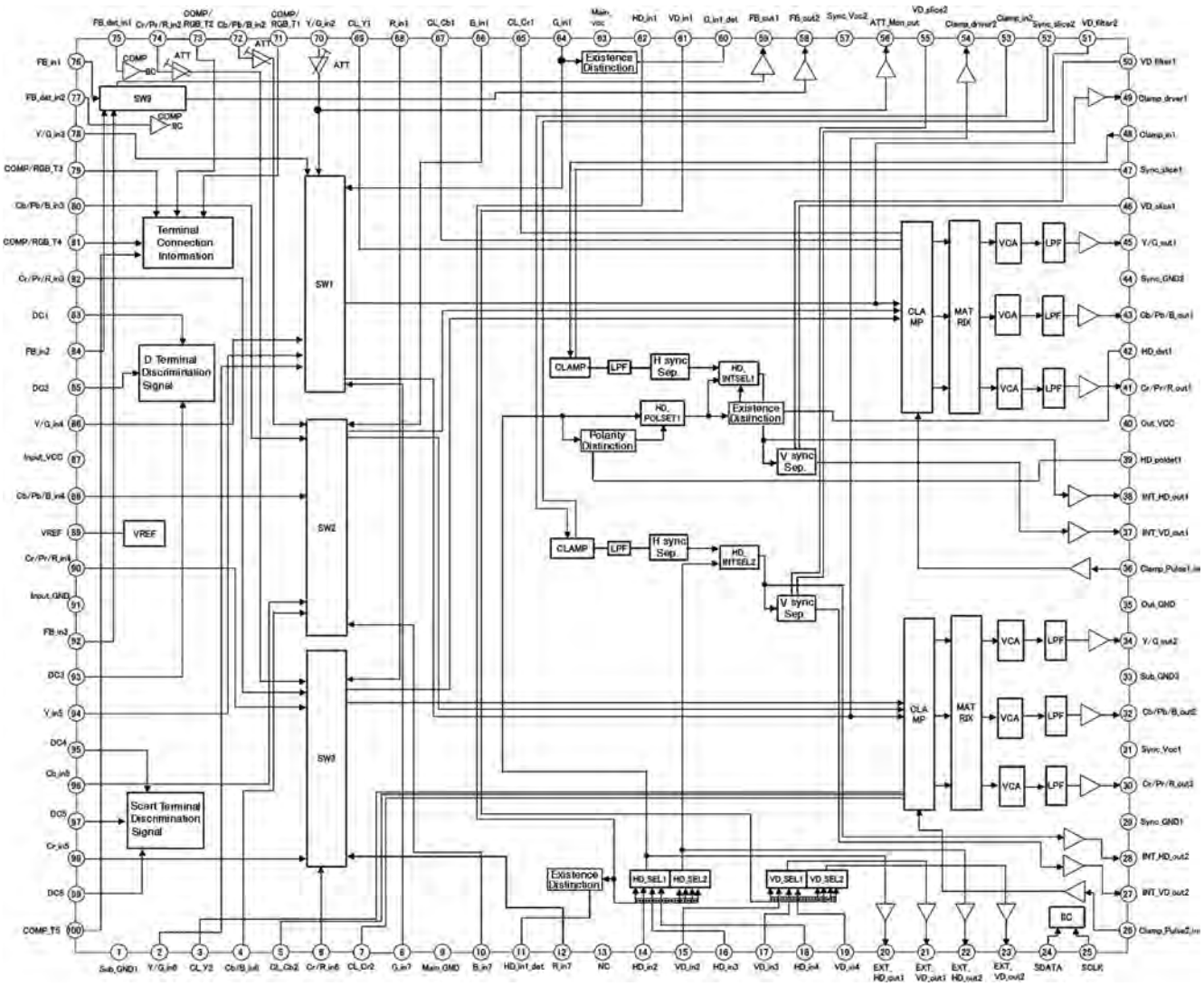

UPD64015AGM-UEU (MAIN ASSY: IC5101)

• Video Decoder (for main screen)

● **Pin Arrangement (Top view)**

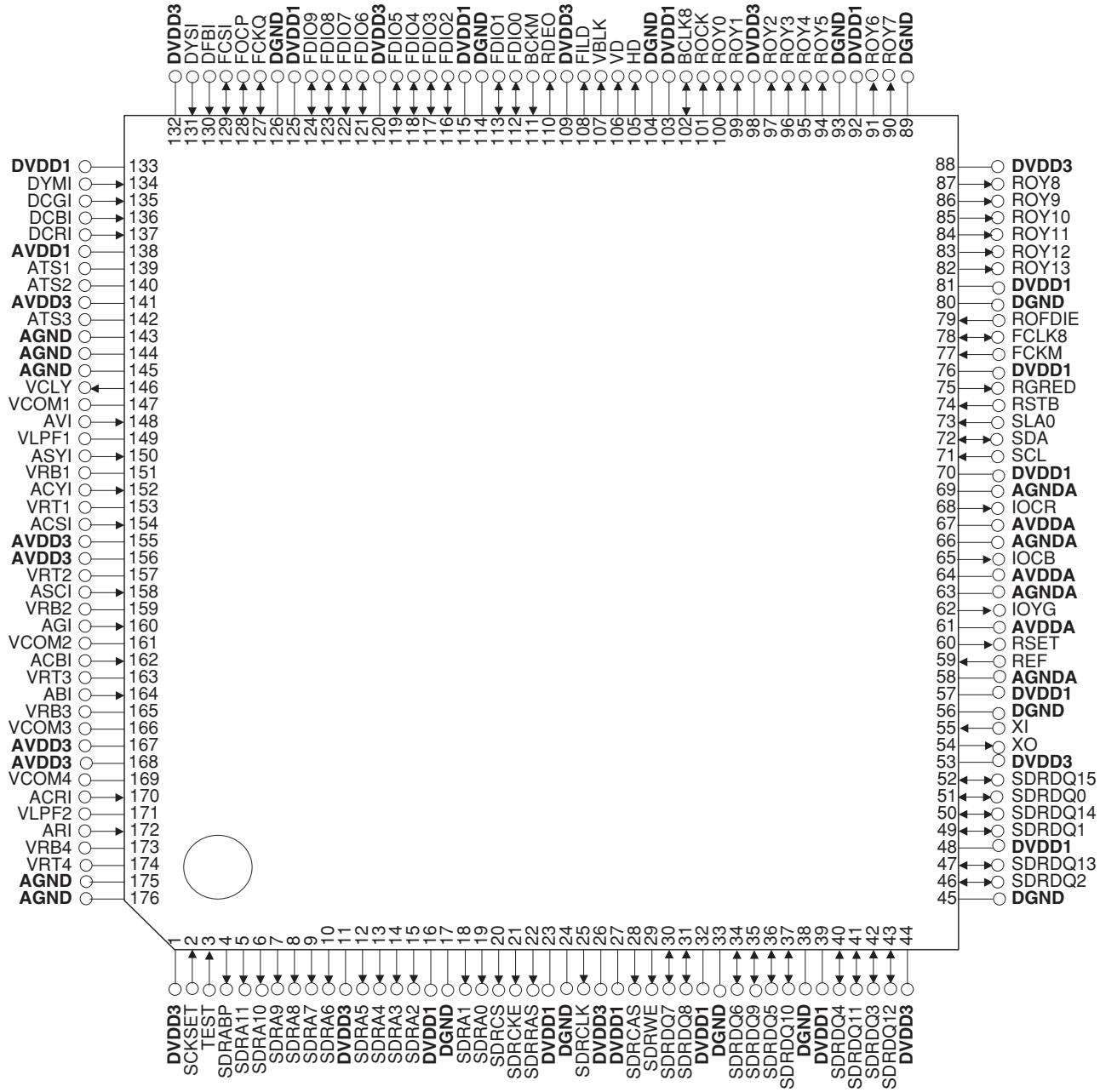

● Block Diagram

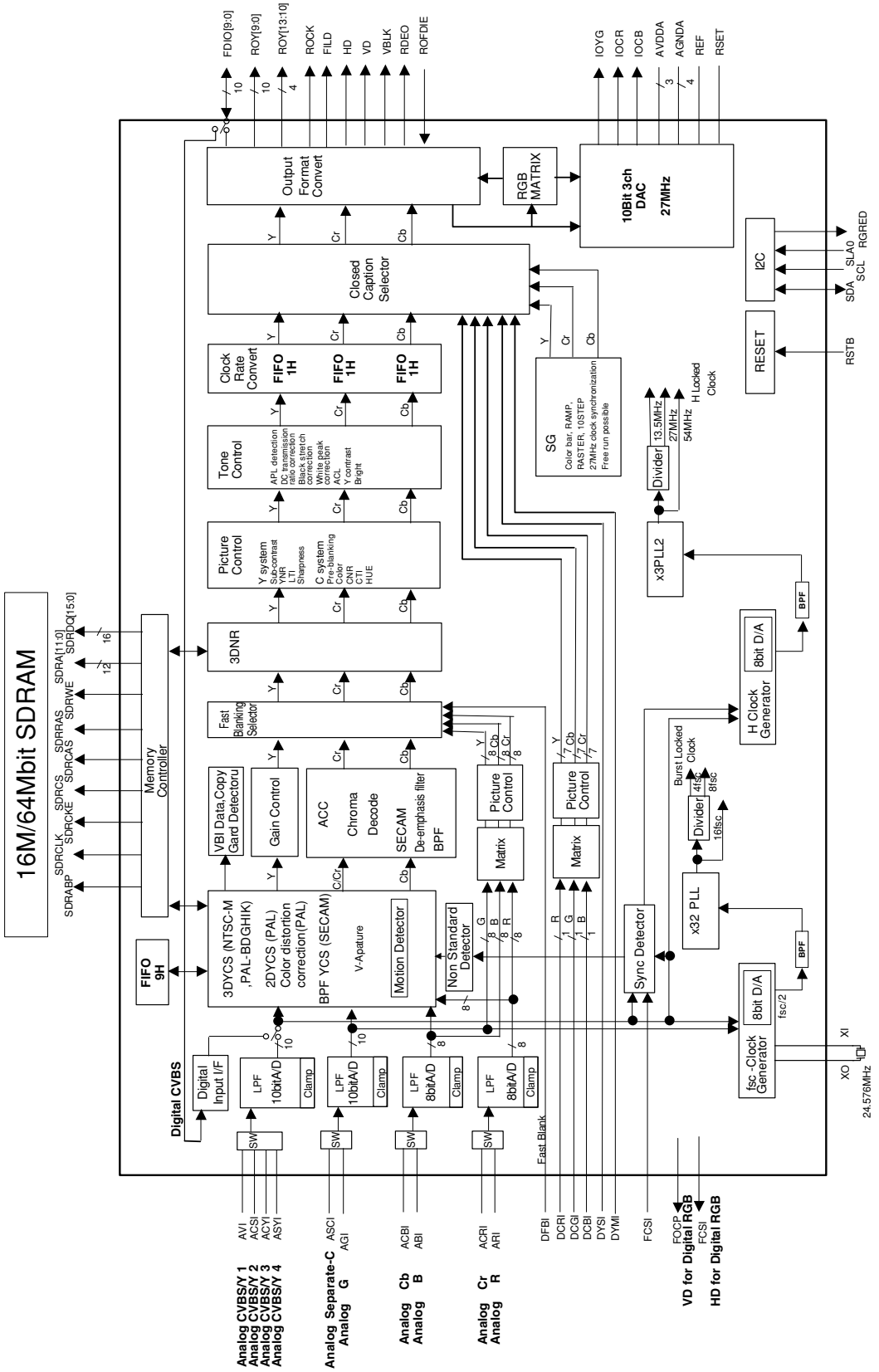

● Pin Function

2.1 Power supply/ground terminal

Acronyms	Terminal number	I/O	Level	Buffer type PU/PD [kΩ]	Functions
AVDD1	138	–	–	–	Analog 1.5V power supply Connect to the 1.5V power supply. Separate it from the other terminals via a filter.
AVDD3	141	–	–	–	Analog 3.3V power supply Connect to the 3.3V power supply. Separate it from the other terminals via a filter.
	155,156,167,168	–	–	–	Analog 3.3V power supply for ADC. Connect to the 3.3V power supply. Separate it from the other power lines via a filter.
AVDDA	61,64,67	–	–	–	Analog 3.3V power supply for DAC. Connect to the 3.3V power supply. Separate it from the other power lines via a filter.
AGND	143,144,145,175,176	–	–	–	Analog ground
AGNDA	58,63,66,69	–	–	–	Analog ground (for DAC)
DVDD1	16,23,27,32,39,48, 57,70,76,81,92,103, 115,125,133	–	–	–	Digital 1.5V power supply Connect to the 1.5V power supply.
DVDD3	1,11,26,44,53,88,98, 109,120,132	–	–	–	Digital 3.3V power supply Connect to the 3.3V power supply.
DGND	17,24,33,38,45,56, 80,89,93,104,114, 126	–	–	–	Digital ground

2.2 System reset terminal

Acronyms	Terminal number	I/O	Level	Buffer type PU/PD [kΩ]	Functions
RSTB	74	I	Schmitt	–	System reset input (Active-Low)

● Pin Function

2.3 I2C bus interface terminal

Acronyms	Terminal number	I/O	Level	Buffer type PU/PD [kΩ]	Functions
RGRED	75	O	LVTTL N-ch open drain	6 mA	I^2C register lead flag output (Active-Low)
SCL	71	I	LVTTL	Fail-safe	I^2C bus clock input Connect to the SCL line of the system.
SDA	72	I/O	LVTTL N-ch open drain	Fail-safe 6 mA	I^2C bus data input/output Connect to the SDA line of the system.
SLA0	73	I	LVTTL	–	I^2C bus slave address selection input (L : B8h/B9h, H : BAh/BBh) Connect to GND when set to low level and to DVDD3 (3.3V) when set to high level.

2.4 Terminal for test

Acronyms	Terminal number	I/O	Level	Buffer type PU/PD [kΩ]	Functions
SCKSET	2	I	LVTTL	–	Test mode selection (L: normal, H: test mode)
TEST	3	I	LVTTL	–	Test setting (L: normal, H: test mode)
FCKM	77	I	LVTTL	–	FCLK8 test mode selection (L: normal, H: test mode)
BCKM	111	I	LVTTL	–	Test mode selection of BCLK8 terminal. (L: normal, H: test mode)
ATS1	139	I	Analog	–	Analog test input Connect to GND normally.
ATS2	140	I	Analog	–	Analog test input Connect to GND normally.
ATS3	142	I	Analog	–	Analog test input Connect to GND normally.
VLPF1	149	O	Analog	–	Analog test output Connect to GND via a 0.1μF capacitor.
VLPF2	171	O	Analog	–	Analog test output Connect to GND via a 0.1μF capacitor.

Caution: Connect these terminals for test to GND unless otherwise instructed.

● Pin Function

2.5 Clock generator terminal

Acronyms	Terminal number	I/O	Level	Buffer type PU/PD [kΩ]	Functions
XI	55	I	Analog	–	Reference clock input Connect 24.576MHz crystal oscillator.
XO	54	O	Analog	–	Reference clock output Connect 24.576MHz crystal oscillator.
BCLK8	102	I/O	LVTTL 3-state	6 mA	Subsequent stage line lock clock monitor input/output It will become Hi-Z when BCK8OUT (SA1Fh, D5)=0. Normally, set to BCK8OUT=0 and leave it open.

2.6 Terminal for μPD64031A and μPD64032 digital connection

Acronyms	Terminal number	I/O	Level	Buffer type PU/PD [kΩ]	Functions
FCLK8	78	I/O	LVTTL 3-state	6 mA	Front stage burst lock clock input/output It will become Hi-Z when FCK8S[2:0] (SA21h, D6-D4)=000b. Normally, set to FCK8S[2:0]=0 and leave it open.
FCKQ	127	I/O	LVTTL 3-state	3 mA	Sampling clock output for μPD64031A and μPD64032 digital connection. It will become Hi-Z when FCKQS[2:0] (SA21h, D2-D0)=000b. Normally, set to FCKQS[2:0]=0 and leave it open.
FOCP	128	I/O	LVTTL 3-state	3 mA	Clamp pulse output for μPD64031A and μPD64032 digital connection/timing output (VD) for digital RGB input. It will become Hi-Z when FOCPS[2:0] (SA23h, D2-D0)=000b. Normally, set to FOCPS[2:0]=0 and leave it open.

2.7 Terminal for RGB input

Acronyms	Terminal number	I/O	Level	Buffer type PU/PD [kΩ]	Functions
DFBI	130	I	LVTTL	–	Fast Blanking signal input for analog RGB input.
DYSI	131	I	LVTTL	–	YS signal input for digital RGB input.
DYMI	134	I	LVTTL	–	YM signal input for digital RGB input.
DCGI	135	I	LVTTL	–	Digital RGB/G signal input
DCBI	136	I	LVTTL	–	Digital RGB/B signal input
DCRI	137	I	LVTTL	–	Digital RGB/R signal input
FCSI	129	I/O	LVTTL 3-state	3 mA	Sync separation signal input/timing output (HD) for RGB input. It will become Hi-Z when FCSIS[2:0] (SA22h, D2-D0)=000b. Normally, set to FCSIS[2:0]=0 and leave it open.

● Pin Function

2.8 ADC1 section terminal

Acronyms	Terminal number	I/O	Level	Buffer type PU/PD [kΩ]	Functions
AVI	148	I	Analog	–	ADC1 composite/Y signal input Input the image signal by cutting the capacity.
ASYI	150	I	Analog	–	ADC1 composite/Y signal input Input the image signal by cutting the capacity.
ACYI	152	I	Analog	–	ADC1 composite/Y signal input Input the image signal by cutting the capacity.
ACSI	154	I	Analog	–	ADC1 composite/Y signal input Input the image signal by cutting the capacity.
VCLY	146	O	Analog	–	ADC1 clamp electric potential Connect to GND via 0.1μF and 10μF capacitors.
VCOM1	147	I	Analog	–	ADC1 in-phase reference voltage Connect to GND via a 0.1μF capacitor.
VRB1	151	I	Analog	–	ADC1 bottom reference voltage Connect to GND via a 0.1μF capacitor.
VRT1	153	I	Analog	–	ADC1 top reference voltage Connect to GND via a 0.1μF capacitor.

2.9 ADC2 section terminal

Acronyms	Terminal number	I/O	Level	Buffer type PU/PD [kΩ]	Functions
ASCI	158	I	Analog	–	ADC2 separate C signal input Input the image signal by cutting the capacity.
AGI	160	I	Analog	–	ADC2 RGB component G signal input Input the image signal by cutting the capacity.
VRT2	157	I	Analog	–	ADC2 top reference voltage Connect to GND via a 0.1μF capacitor.
VRB2	159	I	Analog	–	ADC2 bottom reference voltage Connect to GND via a 0.1μF capacitor.
VCOM2	161	I	Analog	–	ADC2 in-phase reference voltage Connect to GND via a 0.1μF capacitor.

● Pin Function

2.10 ACD3 section terminal

Acronyms	Terminal number	I/O	Level	Buffer type PU/PD [kΩ]	Functions
ACBI	162	I	Analog	–	ADC3 color difference component Cb signal input Input the image signal by cutting the capacity.
ABI	164	I	Analog	–	ADC3 RGB component B signal input Input the image signal by cutting the capacity.
VRT3	163	I	Analog	–	ADC3 top reference voltage Connect to GND via a 0.1μF capacitor.
VRB3	165	I	Analog	–	ADC3 bottom reference voltage Connect to GND via a 0.1μF capacitor.
VCOM3	166	I	Analog	–	ADC3 in-phase reference voltage Connect to GND via a 0.1μF capacitor.

2.9 ACD4 section terminal

Acronyms	Terminal number	I/O	Level	Buffer type PU/PD [kΩ]	Functions
ACRI	170	I	Analog	–	ADC4 color difference component Cr signal input Input the image signal by cutting the capacity.
ARI	172	I	Analog	–	ADC3 RGB component R signal input Input the image signal by cutting the capacity.
VCOM4	169	I	Analog	–	ADC4 in-phase reference voltage Connect to GND via a 0.1μF capacitor.
VRB4	173	I	Analog	–	ADC4 bottom reference voltage Connect to GND via a 0.1μF capacitor.
VRT4	174	I	Analog	–	ADC4 top reference voltage Connect to GND via a 0.1μF capacitor.

2.12 DAC section terminal

Acronyms	Terminal number	I/O	Level	Buffer type PU/PD [kΩ]	Functions
IO-YG	62	O	Analog	–	Color difference component Y/RGB component G output signal. Connect to AGNDA via a 200Ω load resistance.
IO-CR	68	O	Analog	–	Color difference component Cr/RGB component R output signal. Connect to AGNDA via a 200Ω load resistance.
IO-CB	65	O	Analog	–	Color difference component Cb/RGB component B output signal. Connect to AGNDA via a 200Ω load resistance.
REF	59	I	Analog	–	External reference input pin. Supply 1.0V. And, connect to AGNDA via a 0.1μF capacitor.
RSET	60	O	Analog	–	Connect to AGNDA via a 620Ω resistor for external adjustment.

● Pin Function

2.13 Digital image input/output terminal

Acronyms	Terminal number	I/O	Level	Buffer type PU/PD [kΩ]	Functions
FDIO0-FDIO9	112,113,116, 117,118,119, 121,122,123, 124	I/O	LVTTL 3-state	6 mA	Digital 8/10 bit Cb, Cr output/input at the time of μPD64031A digital connection. It will become Hi-Z when FDIOS[2:0] (SA22h, D6-D4)=000b. Leave it open when not in use.
ROCK	101	O	LVTTL 3-state	6 mA	Clock for digital ITU-R BT.656/component output.
ROY0-ROY13	100,99,97,96, 95,94,91,90, 87,86,85,84, 83,82	O	LVTTL 3-state	6 mA	Digital ITU-R BT.656/component output. Digital RGB component (8 bit) output
ROFDIE	79	I	LVTTL	–	Image input/output terminal output enable. The state of ROY[13:0], ROCK, HD, VD, VBLK, FILD and RDEO terminals is controlled. L: Output terminal Hi-Z, H: Output enable Normally, pull up to 3.3V.

2.14 timing output terminal

Acronyms	Terminal number	I/O	Level	Buffer type PU/PD [kΩ]	Functions
HD	105	O	LVTTL 3-state	3 mA	Horizontal sync signal output
VD	106	O	LVTTL 3-state	3 mA	Vertical sync signal output
VBLK	107	O	LVTTL 3-state	3 mA	V blanking output
FILD	108	O	LVTTL 3-state	3 mA	Field output
RDEO	110	O	LVTTL 3-state	3 mA	Effective pixel range output

● Pin Function

2.15 Memory interface terminal

Acronyms	Terminal number	I/O	Level	Buffer type PU/PD [kΩ]	Functions
SDRABP	4	O	LVTTL 3-state	3 mA	All bank pre-charge output for external memory (Active-High)
SDRCLK	25	O	LVTTL 3-state	9 mA	Clock output for external memory
SDRCKE	21	O	LVTTL 3-state	3 mA	Clock enable output for external memory (Active-High)
SDRCS	20	O	LVTTL 3-state	3 mA	Chip select output for external memory (Active-Low)
SDRCAS	28	O	LVTTL 3-state	3 mA	Column address strobe output for external memory (Active-Low)
SDRRAS	22	O	LVTTL 3-state	3 mA	Low address strobe output for external memory (Active-Low)
SDRWE	29	O	LVTTL 3-state	3 mA	Write enable output for external memory (Active-Low)
SDRA0 -SDRA11	19,18,15,14, 13,12,10,9,8, 7,6,5	O	LVTTL 3-state	3 mA	Address output for external memory Insert a damping resistor of approximately 100Ω, and connect to the SDRAM address terminal.
SDRDQ0 -SDRDQ15	51,49,46,42, 40,36,34,30, 31,35,37,41, 43,47,50,52	I/O	LVTTL 3-state	6 mA	Data input/output for external memory.

AD9985KSTZ-110 (MAIN ASSY: IC5301)

• ADC

● **Pin Arrangement (Top view)**

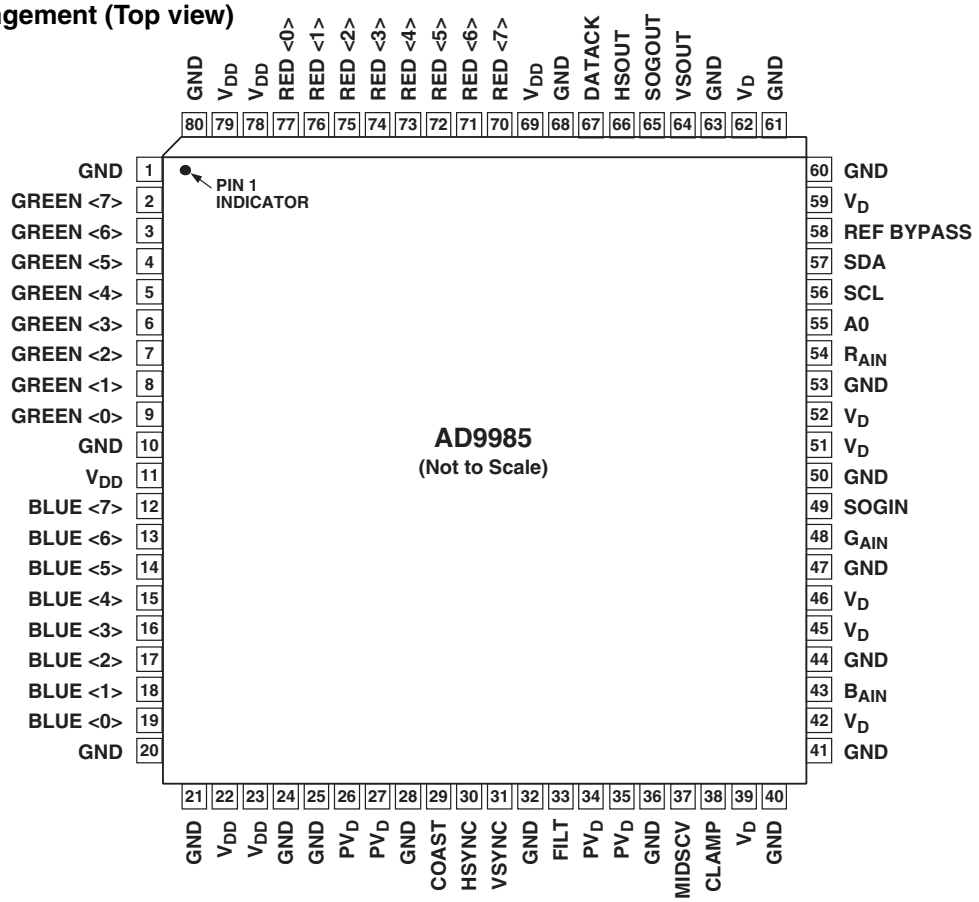

● **Block Diagram**

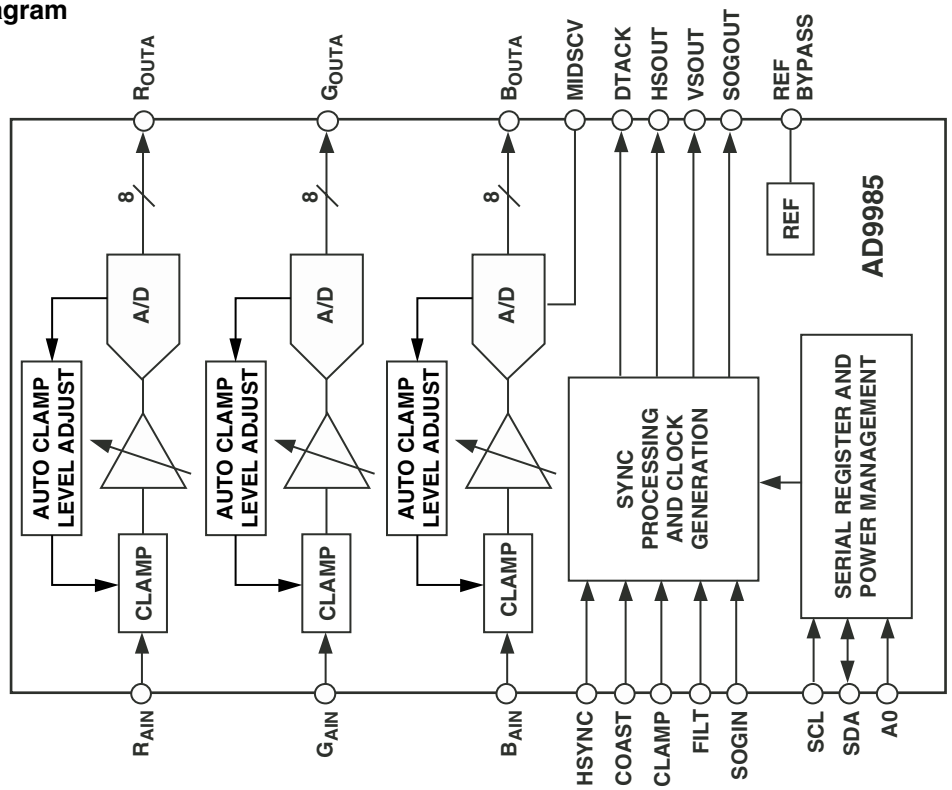

● Pin Function

Pin Type	Mnemonic	Function	Value	Pin No.
Inputs	R_{AIN}	Analog Input for Converter R	0.0 V to 1.0V	54
	G_{AIN}	Analog Input for Converter G	0.0 V to 1.0V	48
	B_{AIN}	Analog Input for Converter B	0.0 V to 1.0V	43
	HSYNC	Horizontal SYNC Input	3.3 V CMOS	30
	VSYNC	Vertical SYNC Input	3.3 V CMOS	31
	SOGIN	Input for Sync-on-Green	0.0 V to 1.0 V	49
	CLAMP	Clamp Input (External CLAMP Signal)	3.3 V CMOS	38
	COAST	PLL COAST Signal Input	3.3 V CMOS	29
Outputs	Red [7:0]	Outputs of Converter Red, Bit 7 is the MSB	3.3 V CMOS	70–77
	Green [7:0]	Outputs of Converter Green, Bit 7 is the BSB	3.3 V CMOS	2–9
	Blue [7:0]	Outputs of Converter Blue, Bit 7 is the BSB	3.3 V CMOS	12–19
	DATACK	Data Output Clock	3.3 V CMOS	67
	HSOUT	HSYNC Output (Phase-Aligned with DATACK)	3.3 V CMOS	66
	VSOUT	VSYNC Output (Phase-Aligned with DATACK)	3.3 V CMOS	64
	SOGOUT	Sync-on-Green Slicer Output	3.3 V CMOS	65
References	REF BYPASS	Internal Reference Bypass	1.25 V	58
	MIDSCV	Internal Midscale Voltage Bypass		37
	FILT	Connection for External Filter Components for Internal PLL		33
Power Supply	V_D	Analog Power Supply	3.3 V	39, 42, 45, 46, 51, 52, 59, 62
	V_{DD}	Output Power Supply	3.3 V	11, 22, 23, 69, 78, 79
	PV_D	PLL Power Supply	3.3 V	26, 27, 34, 35
	GND	Ground	0 V	1, 10, 20, 21, 24, 25, 28, 32, 36, 40, 41, 44, 47, 50, 53, 60, 61, 63, 68, 80
Control	SDA	Serial Port Data I/O	3.3 V CMOS	57
	SCL	Serial Port Data Clock (100 kHz Maximum)	3.3 V CMOS	56
	A0	Serial Port Address Input 1	3.3 V CMOS	55

● Pin Function

Pin Name	Function
OUTPUTS	
HSOUT	Horizontal Sync Output A reconstructed and phase-aligned version of the Hsync input. Both the polarity and duration of this output can be programmed via serial bus registers. By maintaining alignment with DATACK and Data, data timing with respect to horizontal sync can always be determined.
VSOUT	Vertical Sync Output A reconstructed and phase-aligned version of the video Vsync. The polarity of this output can be controlled via a serial bus bit. The placement and duration in all modes is set by the graphics transmitter.
SOGOUT	Sync-On-Green Slicer Output This pin outputs either the signal from the Sync-on-Green slicer comparator or an unprocessed but delayed version of the Hsync input. See the Sync Processing Block Diagram to view how this pin is connected. (Note: Besides slicing off SOG, the output from this pin gets no other additional processing on the AD9985. Vsync separation is performed via the sync separator.)
SERIAL PORT (2-Wire)	
SDA	Serial Port Data I/O
SCL	Serial Port Data Clock
A0	Serial Port Address Input 1 For a full description of the 2-wire serial register and how it works, refer to the 2-wire serial control port section.
DATA OUTPUTS	
RED	Data Output, Red Channel
GREEN	Data Output, Green Channel
BLUE	Data Output, Blue Channel The main data outputs. Bit 7 is the MSB. The delay from pixel sampling time to output is fixed. When the sampling time is changed by adjusting the PHASE register, the output timing is shifted as well. The DATACK and HSOUT outputs are also moved, so the timing relationship among the signals is maintained. For exact timing information.
DATA CLOCK OUTPUT	
DATACK	Data Output Clock The main clock output signal used to strobe the output data and HSOUT into external logic. It is produced by the internal clock generator and is synchronous with the internal pixel sampling clock. When the sampling time is changed by adjusting the PHASE register, the output timing is shifted as well. The Data, DATACK, and HSOUT outputs are all moved, so the timing relationship among the signals is maintained.
INPUTS	
R_{AIN}	Analog Input for Red Channel
G_{AIN}	Analog Input for Green Channel
B_{AIN}	Analog Input for Blue Channel High impedance inputs that accept the Red, Green, and Blue channel graphics signals, respectively. (The three channels are identical, and can be used for any colors, but colors are assigned for convenient reference.) They accommodate input signals ranging from 0.5 V to 1.0 V full scale. Signals should be ac-coupled to these pins to support clamp operation.
HSYNC	Horizontal Sync Input This input receives a logic signal that establishes the horizontal timing reference and provides the frequency reference for pixel clock generation. The logic sense of this pin is controlled by serial Register 0EH Bit 6 (Hsync Polarity). Only the leading edge of Hsync is active; the trailing edge is ignored. When Hsync Polarity = 0, the falling edge of Hsync is used. When Hsync Polarity = 1, the rising edge is active. The input includes a Schmitt trigger for noise immunity, with a nominal input threshold of 1.5 V.
VSYNC	Vertical Sync Input The input for vertical sync.

● Pin Function

Pin Name	Function
SOGIN	Sync-on-Green Input This input is provided to assist with processing signals with embedded sync, typically on the Green channel. The pin is connected to a high speed comparator with an internally generated threshold. The threshold level can be programmed in 10 mV steps to any voltage between 10 mV and 330 mV above the negative peak of the input signal. The default voltage threshold is 150 mV. When connected to an ac-coupled graphics signal with embedded sync, it will produce a noninverting digital output on SOGOUT. (This is usually a composite sync signal, containing both vertical and horizontal sync information that must be separated before passing the horizontal sync signal to Hsync.) When not used, this input should be left unconnected. For more details on this function and how it should be configured, refer to the Sync-on-Green section.
CLAMP	External Clamp Input This logic input may be used to define the time during which the input signal is clamped to ground. It should be exercised when the reference dc level is known to be present on the analog input channels, typically during the back porch of the graphics signal. The CLAMP pin is enabled by setting control bit Clamp Function to 1 (Register 0FH, Bit 7, default is 0). When disabled, this pin is ignored and the clamp timing is determined internally by counting a delay and duration from the trailing edge of the Hsync input. The logic sense of this pin is controlled by Clamp Polarity Register 0FH, Bit 6. When not used, this pin must be grounded and Clamp Function programmed to 0.
COAST	Clock Generator Coast Input (Optional) This input may be used to cause the pixel clock generator to stop synchronizing with Hsync and continue producing a clock at its current frequency and phase. This is useful when processing signals from sources that fail to produce horizontal sync pulses during the vertical interval. The COAST signal is generally not required for PC-generated signals. The logic sense of this pin is controlled by Coast Polarity (Register 0FH, Bit 3). When not used, this pin may be grounded and Coast Polarity programmed to 1, or tied HIGH (to V_D through a 10 k resistor) and Coast Polarity programmed to 0. Coast Polarity defaults to 1 at power-up.
REF BYPASS	Internal Reference BYPASS Bypass for the internal 1.25 V band gap reference. It should be connected to ground through a 0.1 µF capacitor. The absolute accuracy of this reference is ±4%, and the temperature coefficient is ±50 ppm, which is adequate for most AD9985 applications. If higher accuracy is required, an external reference may be employed instead.
MIDSCV	Midscale Voltage Reference BYPASS Bypass for the internal midscale voltage reference. It should be connected to ground through a 0.1 µF capacitor. The exact voltage varies with the gain setting of the Blue channel.
FILT	External Filter Connection For proper operation, the pixel clock generator PLL requires an external filter. Connect the filter shown in Figure to this pin. For optimal performance, minimize noise and parasitics on this node.
POWER SUPPLY	
V_D	Main Power Supply These pins supply power to the main elements of the circuit. They should be filtered and as quiet as possible.
V_{DD}	Digital Output Power Supply A large number of output pins (up to 25) switching at high speed (up to 110 MHz) generates a lot of power supply transients (noise). These supply pins are identified separately from the V_D pins so special care can be taken to minimize output noise transferred into the sensitive analog circuitry. If the AD9985 is interfacing with lower voltage logic, V_{DD} may be connected to a lower supply voltage (as low as 2.5 V) for compatibility.
PV_D	Clock Generator Power Supply The most sensitive portion of the AD9985 is the clock generation circuitry. These pins provide power to the clock PLL and help the user design for optimal performance. The designer should provide quiet, noise-free power to these pins.
GND	Ground The ground return for all circuitry on-chip. It is recommended that the AD9985 be assembled on a single solid ground plane, with careful attention given to ground current paths.

Sil9023CTU (MAIN ASSY: IC5401)

• HDMI Rx

● Pin Arrangement (Top view)

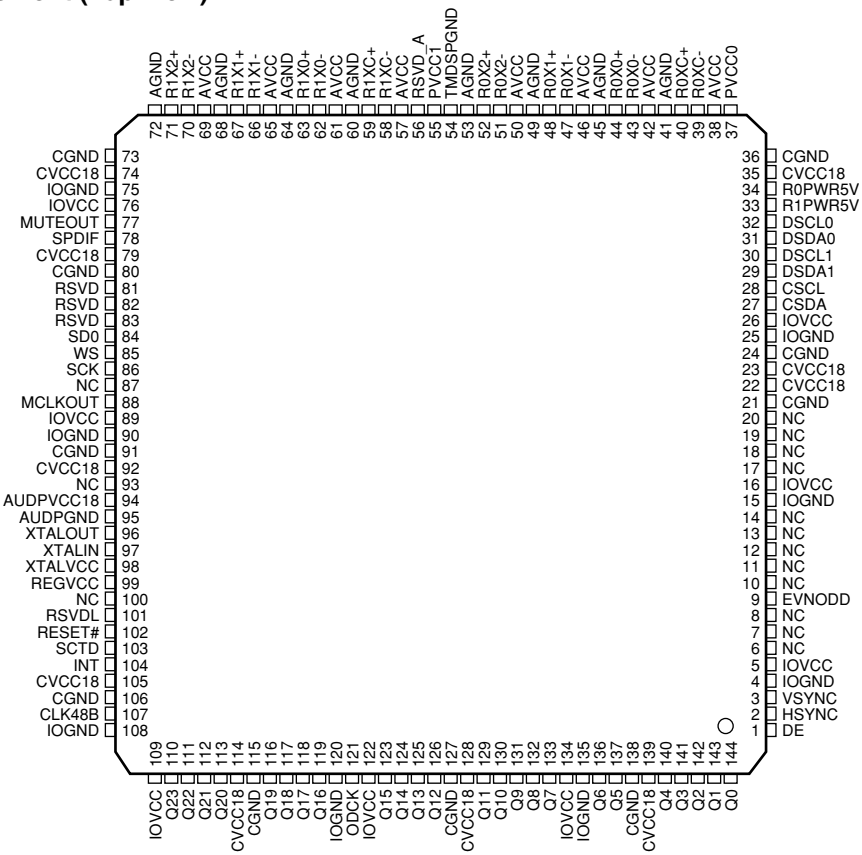

● Block Diagram

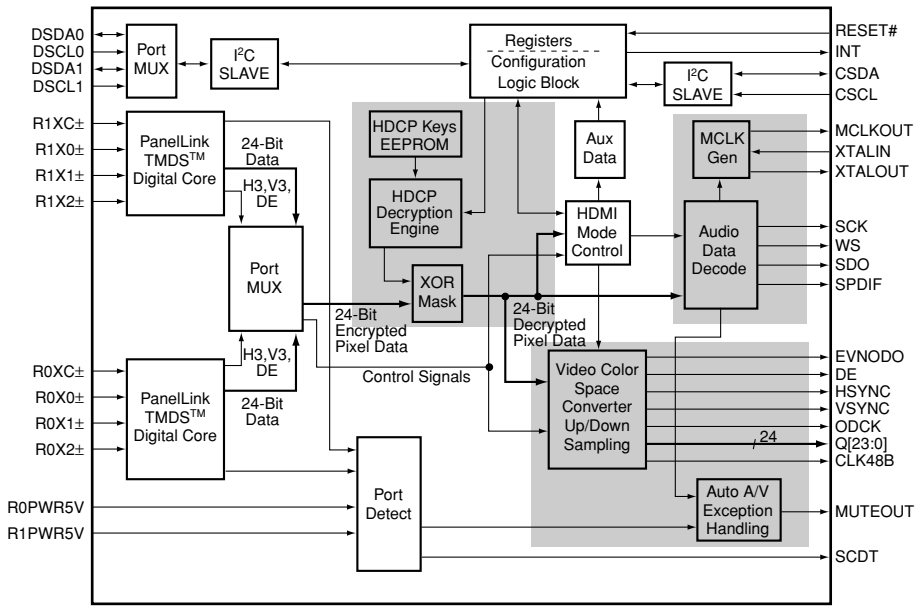

● **Pin Function**

No.	Pin Name	I/O	Pin Function
1	DE	O	Data enable
2	HSYNC	O	H. sync. output control
3	VSYNC	O	V. sync. output control
4	IOGND	–	I/O GND
5	IOVCC	–	I/O VCC
6	NC	–	Non connection
7	NC	–	Non connection
8	NC	–	Non connection
9	EVNODD	O	EVEN/ODD field indicator
10	NC	–	Non connection
11	NC	–	Non connection
12	NC	–	Non connection
13	NC	–	Non connection
14	NC	–	Non connection
15	IOGND	–	I/O GND
16	IOVCC	–	I/O VCC
17	NC	–	Non connection
18	NC	–	Non connection
19	NC	–	Non connection
20	NC	–	Non connection
21	CGND	–	Digital logic GND
22	CVCC18	–	Digital logic VCC (1.8 V)
23	CVCC18	–	Digital logic VCC (1.8 V)
24	CGND	–	Digital logic GND
25	IOGND	–	I/O GND
26	IOVCC	–	I/O VCC
27	CSDA	I/O	Configuration I2C data
28	CSCL	I	Configuration I2C clock
29	DSDA1	I/O	DDC I2C data for port 1
30	DSCL1	I	DDC I2C clock for port 1
31	DSDA0	I/O	DDC I2C data for port 0
32	DSCL0	I	DDC I2C clock for port 0
33	R1PWR5V	I	Port 1 transfer detection
34	R0PWR5V	I	Port 0 transfer detection
35	CVCC18	–	Digital logic VCC (1.8 V)
36	CGND	–	Digital logic GND
37	PVCC0	–	TMDS port 0 PLL VCC
38	AVCC	–	TMDS analog VCC
39	R0XC-	I	TMDS input clock
40	R0XC+	I	TMDS input clock
41	AGND	–	TMDS analog GND
42	AVCC	–	TMDS analog VCC
43	R0X0-	I	TMDS input data
44	R0X0+	I	TMDS input data
45	AGND	–	TMDS analog GND
46	AVCC	–	TMDS analog VCC
47	R0X1-	I	TMDS input data
48	R0X1+	I	TMDS input data
49	AGND	–	TMDS analog GND
50	AVCC	–	TMDS analog VCC

A

● Pin Function

No.	Pin Name	I/O	Pin Function
51	R0X2-	I	TMDS input data
52	R0X2+	I	TMDS input data
53	AGND	–	TMDS analog GND
54	TMDSPGND	–	TMDS PLL GND
55	PVCC1	–	TMDS port 1 PLL VCC
56	RSVD_A	–	Reserved
57	AVCC	–	TMDS analog VCC
58	R1XC-	I	TMDS input clock
59	R1XC+	I	TMDS input clock
60	AGND	–	TMDS analog GND
61	AVCC	–	TMDS analog VCC
62	R1X0-	I	TMDS input data
63	R1X0+	I	TMDS input data
64	AGND	–	TMDS analog GND
65	AVCC	–	TMDS analog VCC
66	R1X1-	I	TMDS input data
67	R1X1+	I	TMDS input data
68	AGND	–	TMDS analog GND
69	AVCC	–	TMDS analog VCC
70	R1X2-	I	TMDS input data
71	R1X2+	I	TMDS input data
72	AGND	–	TMDS analog GND
73	CGND	–	Digital logic GND
74	CVCC18	–	Digital logic VCC (1.8 V)
75	IOGND	–	I/O GND
76	IOVCC	–	I/O VCC
77	MUTEOUT	O	Audio output mute
78	SPDIF	O	S/PDIF audio output
79	CVCC18	–	Digital logic VCC (1.8 V)
80	CGND	–	Digital logic GND
81	RSVD	O	–
82	RSVD	O	–
83	RSVD	O	–
84	SD0	O	I2C serial data output
85	WS	O	I2C word select output
86	SCK	O	I2C serial clock output
87	NC	–	Non connection
88	MCLKOUT	O	Audio master clock output
89	IOVCC	–	I/O VCC
90	IOGND	–	I/O GND
91	CGND	–	Digital logic GND
92	CVCC18	–	Digital logic VCC (1.8 V)
93	NC	–	Non connection
94	AUDPVCC18	–	ACR PLL VCC
95	AUDPGND	–	ACR PLL GND
96	XTALOUT	O	Crystal clock output
97	XTALIN	I	Crystal clock input
98	XTALVCC	–	ACR PLL crystal input VCC
99	REGVCC	–	ACR PLL regulator VCC
100	NC	–	Non connection

● **Pin Function**

No.	Pin Name	I/O	Pin Function
101	RSVDL	I	Reserved, Low fixing
102	RESET#	I	Reset, active Low
103	SCTD	O	Display active video with the HDMI input port
104	INT	O	Interruption output
105	CVCC18	–	Digital logic VCC (1.8 V)
106	CGND	–	Digital logic GND
107	CLK48B	I/O	Data bus latch enable
108	IOGND	–	I/O GND
109	IOVCC	–	I/O VCC
110	Q23	O	24-bit output, pixel data bus
111	Q22	O	24-bit output, pixel data bus
112	Q21	O	24-bit output, pixel data bus
113	Q20	O	24-bit output, pixel data bus
114	CVCC18	–	Digital logic VCC (1.8 V)
115	CGND	–	Digital logic GND
116	Q19	O	24-bit output, pixel data bus
117	Q18	O	24-bit output, pixel data bus
118	Q17	O	24-bit output, pixel data bus
119	Q16	O	24-bit output, pixel data bus
120	IOGND	–	I/O GND
121	ODCK	O	Output data clock
122	IOVCC	–	I/O VCC
123	Q15	O	24-bit output, pixel data bus
124	Q14	O	24-bit output, pixel data bus
125	Q13	O	24-bit output, pixel data bus
126	Q12	O	24-bit output, pixel data bus
127	CGND	–	Digital logic GND
128	CVCC18	–	Digital logic VCC (1.8 V)
129	Q11	O	24-bit output, pixel data bus
130	Q10	O	24-bit output, pixel data bus
131	Q9	O	24-bit output, pixel data bus
132	Q8	O	24-bit output, pixel data bus
133	Q7	O	24-bit output, pixel data bus
134	IOVCC	–	I/O VCC
135	IOGND	–	I/O GND
136	Q6	O	24-bit output, pixel data bus
137	Q5	O	24-bit output, pixel data bus
138	CGND	–	Digital logic GND
139	CVCC18	–	Digital logic VCC (1.8 V)
140	Q4	O	24-bit output, pixel data bus
141	Q3	O	24-bit output, pixel data bus
142	Q2	O	24-bit output, pixel data bus
143	Q1	O	24-bit output, pixel data bus
144	Q0	O	24-bit output, pixel data bus

LTC3414EFE (MAIN ASSY: IC4102)

• Regulator IC

● Pin Arrangement (Top view)

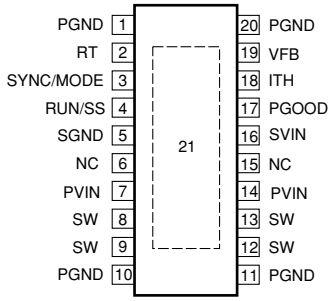

● Block Diagram

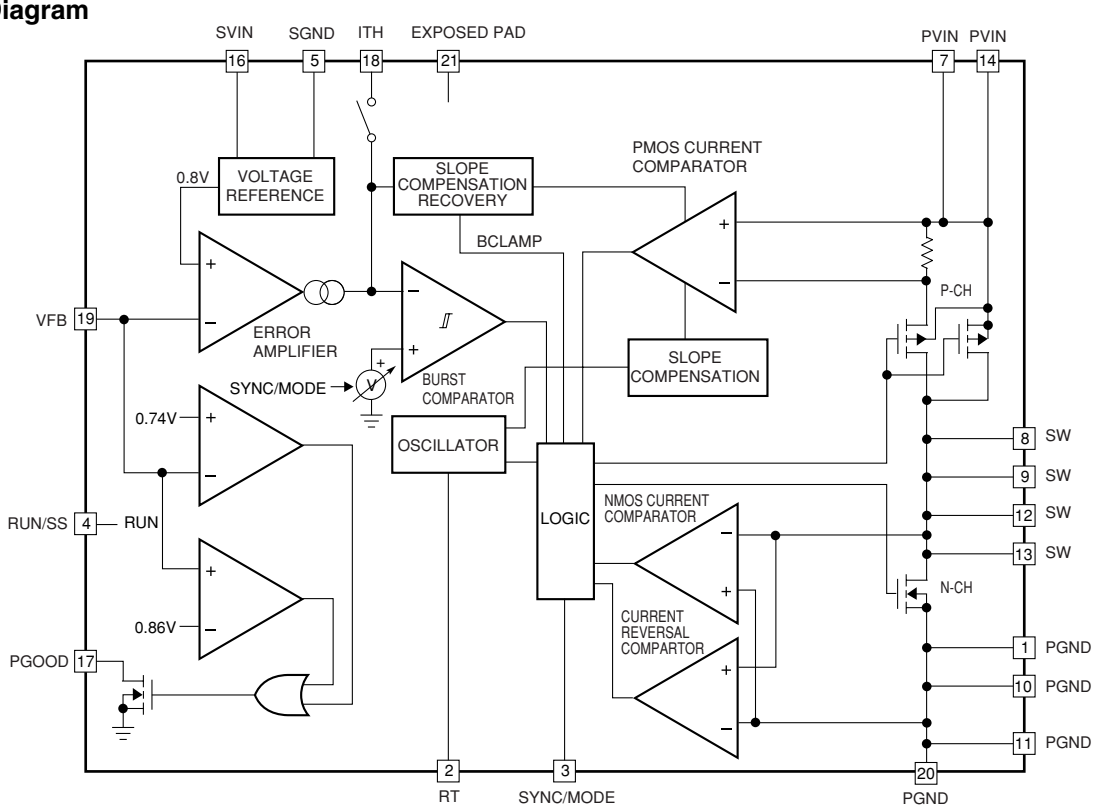

● Pin Function

No.	Pin Name	I/O	Pin Function	No.	Pin Name	I/O	Pin Function
1	PGND	–	Power Ground.	12	SW	–	Switch Node Connection to Inductor.
2	RT	I	Oscillator Resistor Input.	13	SW	–	Switch Node Connection to Inductor.
3	SYNC/MODE	I	Mode Select and External Clock Synchronization Input.	14	PVIN	–	Power Input Supply.
4	RUN/SS	I	Run Control and Soft-Start Input.	15	NC	–	Open. No internal connection.
5	SGND	–	Signal Ground.	16	SVIN	I	Signal Input Supply.
6	NC	–	Open. No internal connection.	17	PGOOD	O	Power Good Output.
7	PVIN	–	Power Input Supply	18	ITH	–	Error Amplifier Compensation Point.
8	SW	–	Switch Node Connection to Inductor.	19	VFB	I	Feedback Pin.
9	SW	–	Switch Node Connection to Inductor.	20	PGND	–	Power Ground.
10	PGND	–	Power Ground.	21	Exposed Pad	–	Should be connected to SGND and soldered to the PCB.
11	PGND	–	Power Ground.				

■ LTC3412EFE (MAIN ASSY: IC4103)

• Regulator IC

● Pin Arrangement (Top view)

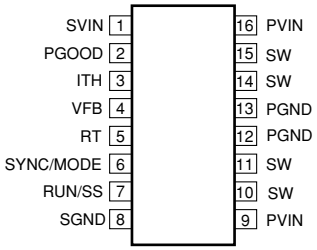

● Block Diagram

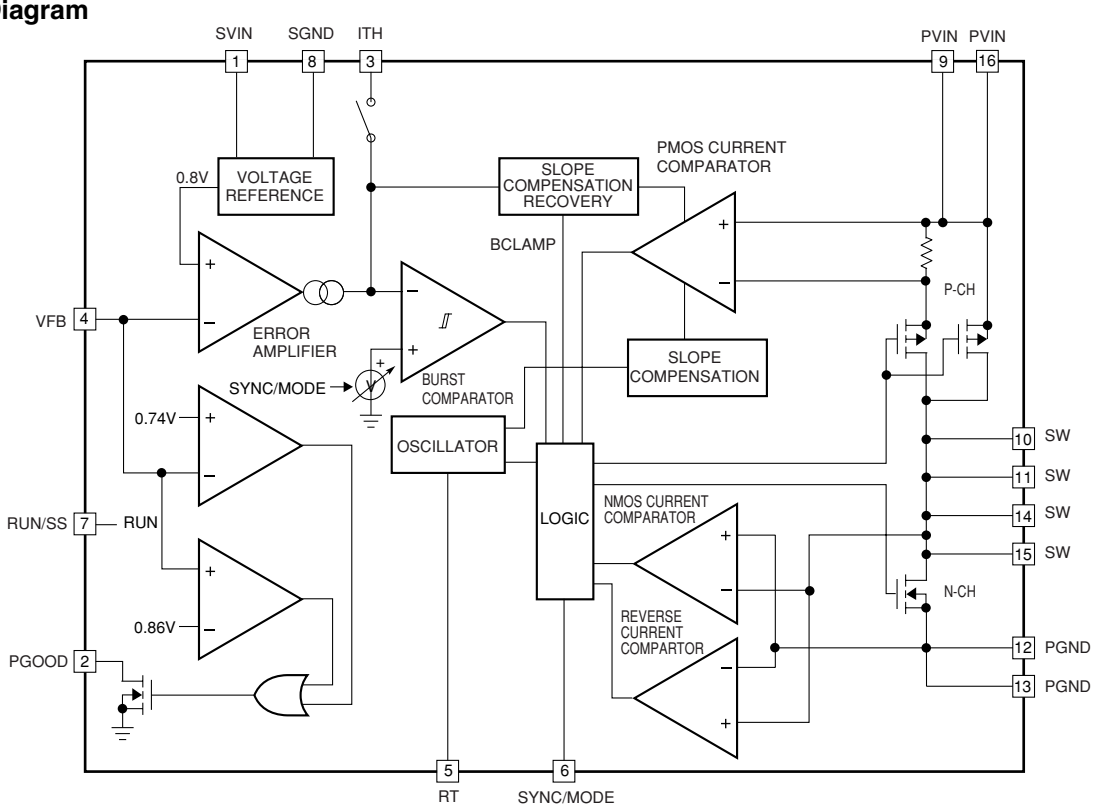

● Pin Function

No.	Pin Name	I/O	Pin Function	No.	Pin Name	I/O	Pin Function
1	SVIN	I	Signal Input Supply.	9	PVIN	I	Power Input Supply
2	PGOOD	O	Power Good Output.	10	SW	–	Switch Node Connection to the Inductor.
3	ITH	–	Error Amplifier Compensation Point.	11	SW	–	Switch Node Connection to the Inductor.
4	VFB	I	Feedback Pin.	12	PGND	–	Power Ground
5	RT	I	Oscillator Resistor Input.	13	PGND	–	Power Ground
6	SYNC/MODE	I	Mode Select and External Clock Synchronization Input.	14	SW:	–	Switch Node Connection to the Inductor.
7	RUN/SS	I	Run Control and Soft-Start Input.	15	SW	–	Switch Node Connection to the Inductor.
8	SGND	–	Signal Ground.	16	PVIN	I	Power Input Supply

S1170B25UC-OTA (MAIN ASSY : IC4105)
S1170B15UC-OTA (MAIN ASSY : IC4106)

• Regulator IC

● Pin Arrangement (Top view)

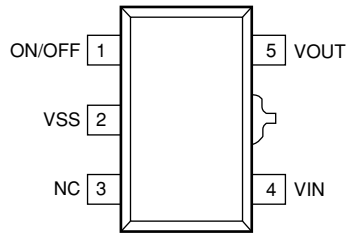

● Pin Function

No.	Pin Name	I/O	Pin Function
1	ON/OFF	I	Power OFF pin
2	VSS	–	Ground
3	NC	–	Non connection
4	VIN	I	Voltage input
5	VOUT	O	Voltage output

● Block Diagram

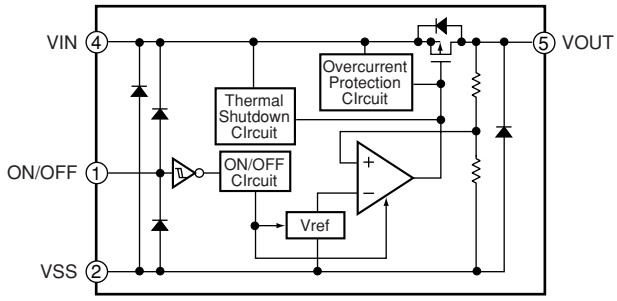

NJU26901E2 (MAIN ASSY : IC4704)

• Audio Delay IC

● Pin Arrangement (Top view)

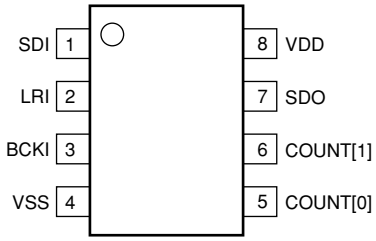

● Pin Function

No.	Pin Name	I/O	Pin Function
1	SDI	I	Serial audio data input
2	LRI	I	LR clock input
3	BCKI	I	Serial clock input
4	VSS	–	Ground
5	COUNT[0]	I	Delay time setting 0
6	COUNT[1]	I	Delay time setting 1
7	SDO	O	Serial audio data output
8	VDD	–	Power supply (+2.5V)
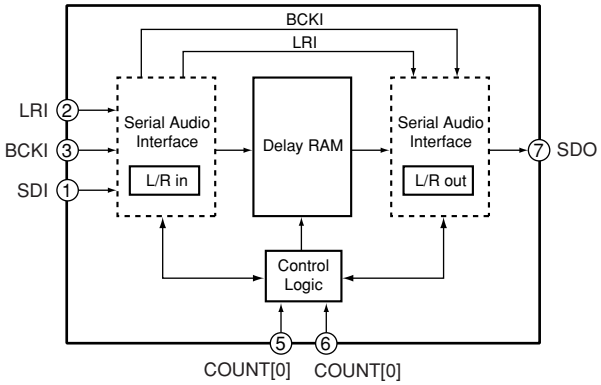
● Block Diagram